MONROE COUNTY
PUBLIC WORKS DEPARTMENT

APPROVED 10/95

REVISED

STANDARD ROAD DETAIL

# PAVEMENT RESTORATION FOR TRENCHES CUT IN PUBLIC RIGHTS-OF-WAY

R 17.2

SHEET 1 OF 2

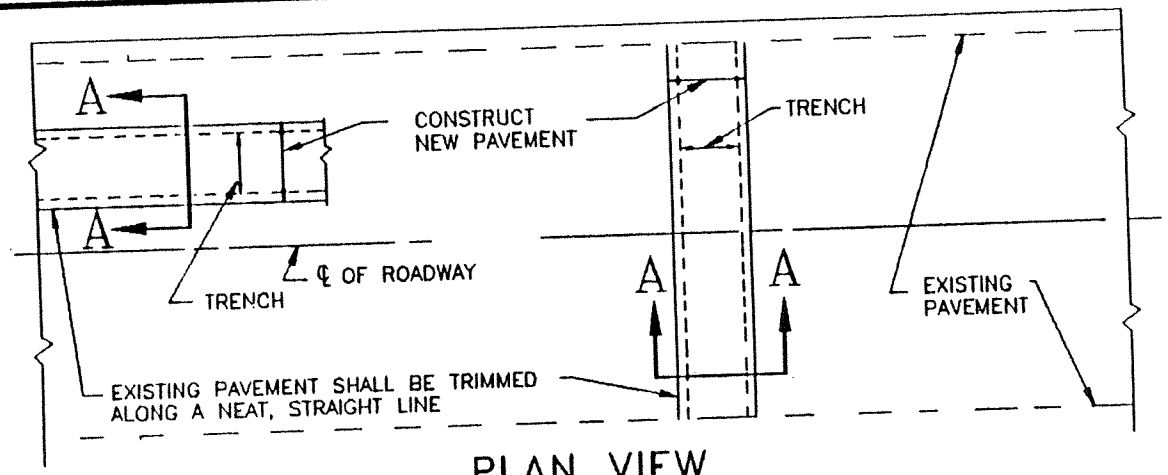


## PLAN VIEW

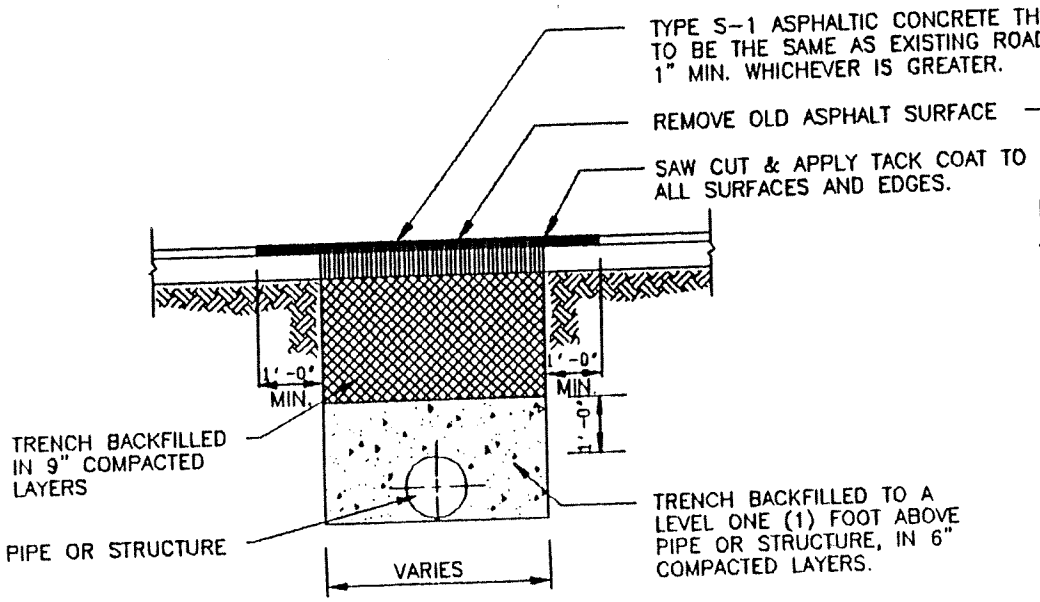


## SECTION A-A

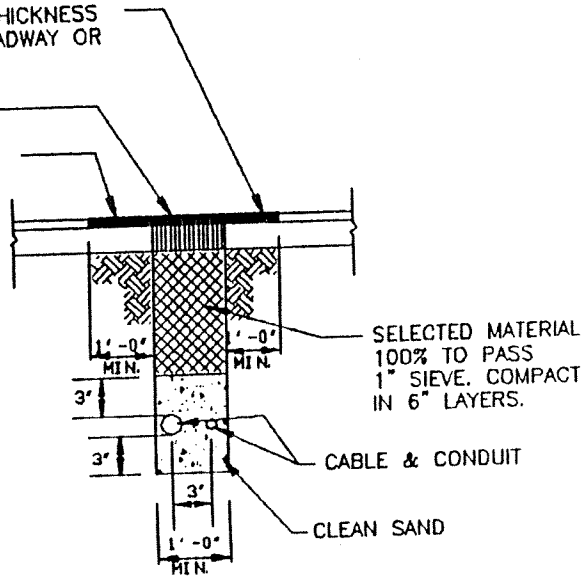


## DIRECT BURIAL CABLE OR CONDUIT

NOTE

PAVEMENT RESTORATION FOR LONGITUDINAL CUTS SHALL INCLUDE FULL LANE WIDTH RESURFACING FOR EACH LANE WITHIN WHICH THE CUT EXTENDS. IN SOME CASES IT WILL BE NECESSARY TO OVERLAY MORE THAN ONE (1) LANE W/ ASPHALTIC CONCRETE TO SATISFY PAVEMENT SLOPE.

| ITEM | CROSS REF. | SPEC. REF. |
|---|---|---|
| ASPHALTIC CONCRETE | | B2-13 |
| UTILITY PLACEMENT | G2.0 | |

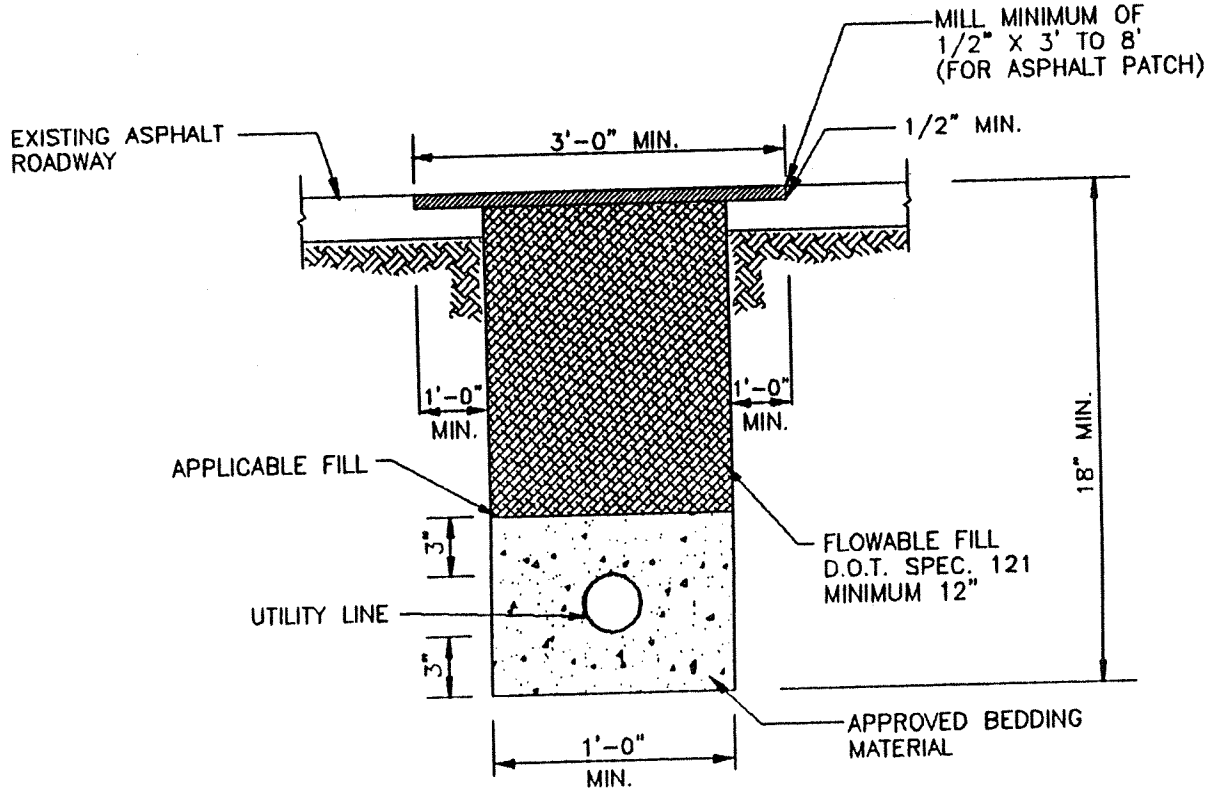


# TYPICAL TRENCH RESTORATION (ALTERNATE TO SECTION A-A)

| ITEM | CROSS REF. | SPEC. REF. |
|---|---|---|
| ASPHALTIC CONCRETE | | B2-13 |
| UTILITY PLACEMENT | G2.0 | |

MONROE COUNTY
PUBLIC WORKS DEPARTMENT

APPROVED 10/95

REVISED

STANDARD ROAD DETAIL

PAVEMENT RESTORATION FOR TRENCHES CUT IN PUBLIC RIGHTS-OF-WAY

R 17.2

SHEET 2 OF 2