SEPTEMBER 2014

Bridge Assessment Report

Garrison Bight

Ocean Bay Drive

Seaview Drive

Similar Sound

Steam Boat Creek

Sugarloaf Creek

Watson Boulevard

Submitted to:

Monroe County

Engineering Department
1100 Simonton Street
Key West, Florida 33040

Prepared by:

Kisinger Campo & Associates, Corp.

Jason LaBarbera, PE
FL PE License No. 64004

201 North Franklin Street, Suite 400
Tampa, Florida 33602

Executive Summary

Monroe County (the County) owns and maintains 27 bridges from North Key Largo to Key West. Bridge type varies from location to location, but the primary elements of each bridge are reinforced or prestressed concrete. Due to the extremely aggressive environment of the Florida Keys, most of these bridges are experiencing ongoing deterioration. Some recent repair projects have helped to maintain and preserve the County owned inventory and there will likely be several additional repair or replacement projects over the years as the bridge inventory continues to age.

Kisinger Campo and Associates Corp. (KCA) has been tasked with creating this Bridge Assessment Report for the County. The purpose of this Bridge Assessment Report is to assist County Engineers with budgeting, planning and prioritizing the needs of future bridge repair projects. In addition, we will advise the County on the preferred repair alternatives that will achieve the maximum potential of the bridge preservation and maintenance work program. Finally, we will group smaller and nearby repairs into logical bridge project sets and estimate the time that a bridge should remain in service before a replacement structure should be considered.

After first gathering all available plans, inspection reports and other documentation a field inspection was conducted at each bridge site. Cost estimates were then created for a bridge repair alternate, a bridge replacement alternate, and when feasible, a bridge widening alternate. A Bridge Matrix was created that includes all pertinent information for each bridge and is a valuable tool in assessing and planning the future work program. An individual assessment and recommendation was created for each bridge and finally the recommended repairs were prioritized and grouped into separate projects when applicable. All of the electronic files that have been gathered or created have been filed under their corresponding bridge number and included on the CD attached to the front cover of this report.

Table of Contents

Executive Summary 1

1.0 Introduction 4

2.0 Bridge Location Maps 5

3.0 Bridge Matrix 10

4.0 Bridge Recommendations 12

4.1 Garrison Bight (Bridge # 904025) 12

4.2 Geiger Key (Bridge # 904110) 12

4.3 Similar Sound (Bridge # 904120) 13

4.4 Bay Point (Bridge # 904140) 13

4.5 Shore Drive (Bridge # 904152) 14

4.6 Sugarloaf Boulevard (Bridge # 904153) 14

4.7 Sugarloaf Creek (Sammy's Creek) (Bridge # 904155) 15

4.8 Old SR 4A (CR 939) (Bridge # 904160) 15

4.9 Caribbean Drive (Bridge # 904250) 16

4.10 Watson Boulevard (Bridge # 904305) 16

4.11 Fern Avenue (Bridge # 904307) 17

4.12 SR 940 – Leg A (Watson Boulevard) (Bridge # 904310) 17

4.13 No Name Key Bridge (Bridge # 904320) 18

4.14 Tom's Harbor Channel (Bridge # 904600) 18

4.15 Truman Bridge (Bridge # 904602) 19

4.16 Bimini Drive (Bridge # 904603) 19

4.17 Harbor Drive (Bridge # 904604) 20

4.18 Seaview Drive (Bridge # 904606) 21

4.19 Valois Boulevard (Bridge # 904908) 21

4.20 Bahama Road (Bridge # 904910) 22
4.21 Steam Boat Creek (Bridge # 904980) 22
4.22 Tubby's Creek (Bridge # 904982) 23
4.23 Mosquito Creek (Bridge # 904984) 23
4.24 Saunder's Creek (Bridge # 904986) 24
4.25 Card Sound Bridge (Bridge # 904990) 24
4.26 Ocean Bay Drive (No Inspection Report) 25
4.27 Ocean Bay Drive - Pedestrian Bridge (No Inspection Report) 25
5.0 Work Program Priority 26
5.1 Priority Ranking 26
5.2 Project Grouping 28

Appendices

Appendix A – Duck Key Bridge Replacement Presentation

Appendix B – Cost Estimates

1.0 Introduction

1.0 Introduction

Monroe County owns and maintains 27 bridges from north Key Largo to Key West. All of the bridges in the current Monroe County inventory were built in 1955 or thereafter. The majority of the inventory consists of reinforced or prestressed concrete flat slab bridges. There are also six AASHTO Beam Bridges, one high level bridge with a fracture critical steel main span (at Card Sound), and one aluminum truss pedestrian bridge (at Ocean Bay Drive). Many of the bridges are short single span bridges over small canals that connect residential areas. The bridges with multiple spans are all founded on pile bents with prestressed concrete piles, except for the high spans of the Card Sound Bridge which are founded on multi-column piers. Typical end bents are founded on prestressed concrete piles or at some locations founded directly on the natural rock that the residential canals were cut out of.

The extremely aggressive environment of the Florida Keys has contributed to the deterioration of the County bridges over the years. All county bridges span a salt water body and are susceptible to salt spray and splashing due to storm and wave action. In addition, fisherman often contribute to the saltwater exposure by spilling water onto the bridge decks. Some bridges are close enough to the water line that they are likely overtopped by saltwater in a storm event. This constant salt water exposure allows chlorides to permeate through the concrete elements and into the reinforcing steel, causing the steel reinforcing to corrode and expand, eventually spalling the concrete and accelerating additional deterioration. Paint systems on steel elements will also eventually fail, resulting in steel element corrosion and section loss.

A well-executed maintenance plan can help to slow the inevitable bridge deterioration, preserve the bridge inventory, and prolong the remaining service life of each bridge. However, the expected service life of any bridge in this extremely aggressive environment will most likely be limited to 75 years with careful maintenance. Repairs will become more frequent and repair costs will become larger as the structure ages. At some point, the costs associated with the increasingly frequent repairs will escalate and bridge replacement becomes the preferred alternative.

The purpose of this Bridge Assessment Report is to assist County Engineers with budgeting, planning and prioritizing the needed bridge repair projects. In addition, Kisinger Campo and Associates Corp. (KCA) will advise the county on the preferred repair alternatives that will achieve the maximum potential of the bridge preservation and maintenance work program. These well planned and timely repair projects can also help avoid more costly, quick response, emergency repair projects in the future. The final goal of this report is to estimate the time that a bridge can remain in service before a replacement structure should be considered.

2.0 Bridge Location Maps

2.0 Bridge Location Maps

The following sheets show the locations of all of the Monroe County Owned Bridges. They are labeled by bridge name and bridge number on the enlarged maps for the Lower Keys, Middle Keys and Upper Keys. For specific information about each bridge, see Section 3.0 Bridge Matrix.

G:\1201316 Monroe County On Call Eng Srvs\SpecialProjects\GIS\Maps\Bridge_Overview.mxd 8/8/2014

Lower Keys

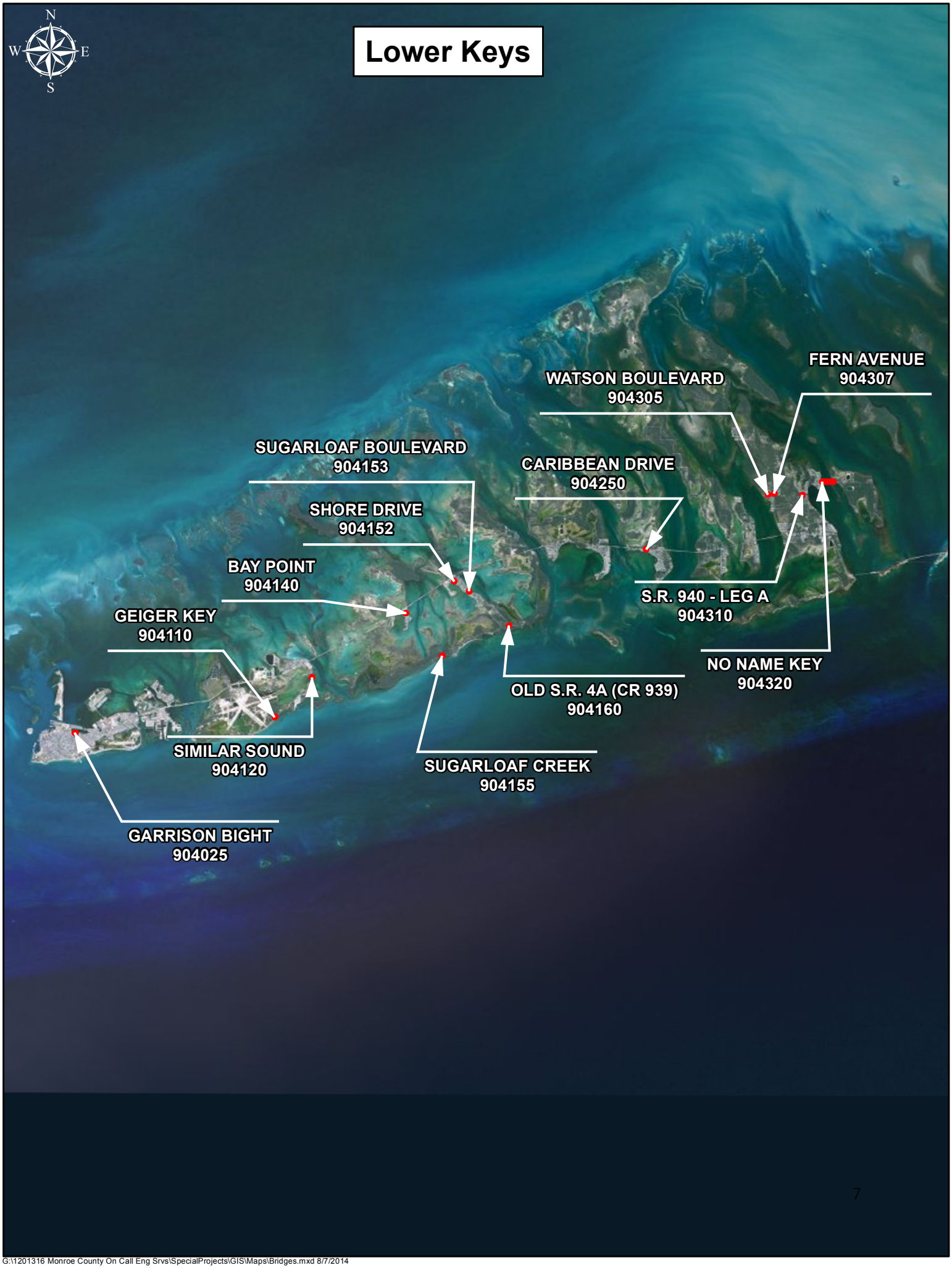

G:\1201316 Monroe County On Call Eng Srvs\SpecialProjects\GIS\Maps\Bridges.mxd 8/7/2014

Middle Keys

G:\1201316 Monroe County On Call Eng Srvs\SpecialProjects\GIS\Maps\Bridges.mxd 8/7/2014

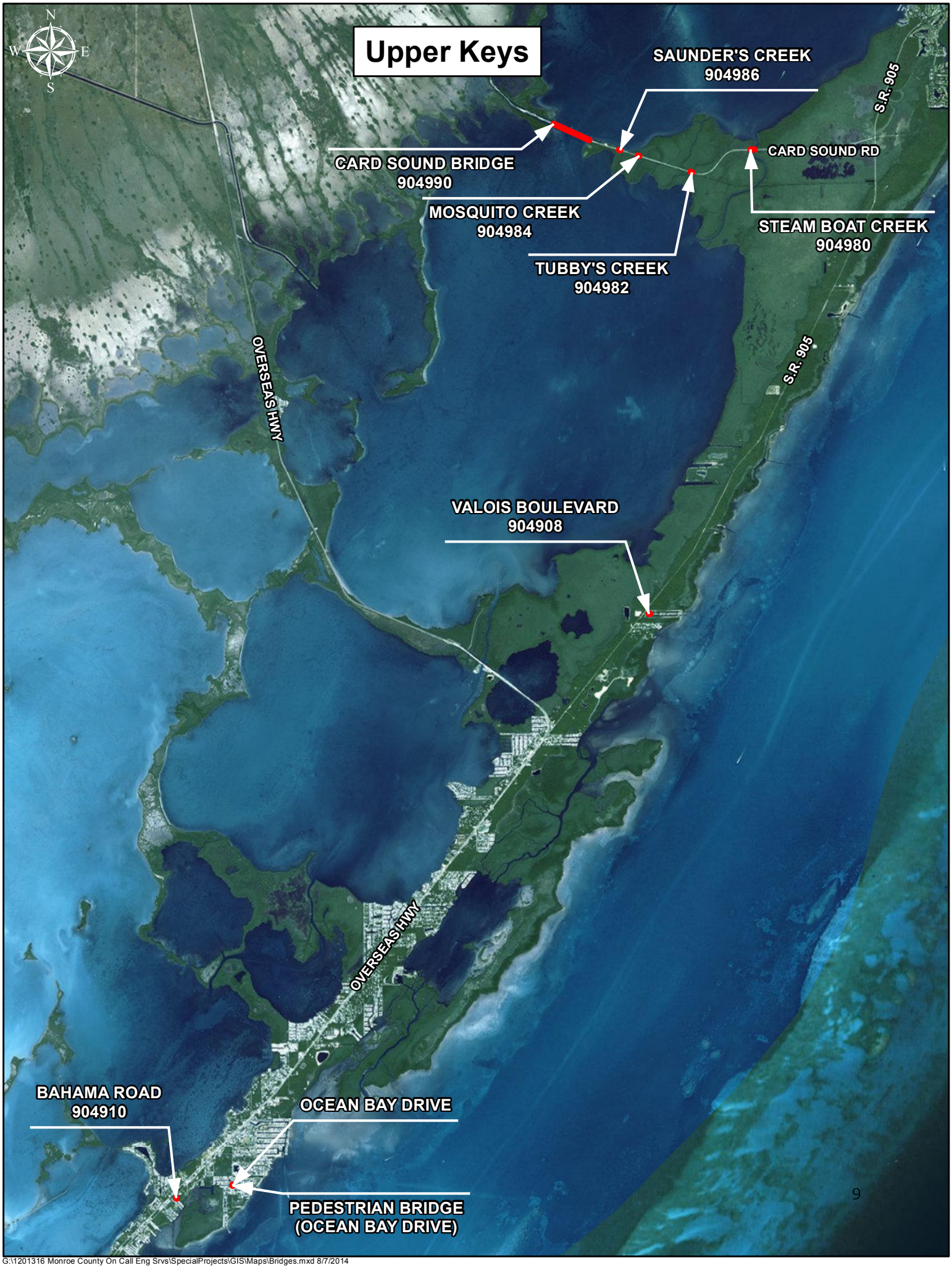

G:\1201316 Monroe County On Call Eng Srvs\SpecialProjects\GIS\Maps\Bridges.mxd 8/7/2014

3.0 Bridge Matrix

3.0 Bridge Matrix

A Bridge Matrix was created that includes all of the pertinent information for each bridge. It is a valuable tool in assessing and planning the future bridge work program as you can quickly see all of the important information for each bridge and compare it to the other bridges in the inventory. The following is a brief explanation of some of the information:

- NBI Rating – National Bridge Inventory (NBI) structural evaluation of each component. NBI Ratings are taken from the Bridge Inspection Reports for each bridge component; deck, superstructure, substructure and channel. Scale of 0-9 (9 = Superior, 0 = Bridge Closed).
- NBI Average Ranking – Average of the individual NBI ratings of each bridge component
- Operating Rating – The maximum permissible live load that can be placed on the bridge. Allowing unlimited usage at the Operating Rating level will reduce the life of the bridge.
- Posting – Determines if bridge posting is required for load capacity less than that of the legal loads. (5 = No Posting Required)
- Design Load – Original load that the bridge was designed for.
- Sufficiency Rating- Calculated based on 55% structural evaluation, 30% obsolescence of its design and 15% on the importance to the public. A score of 80 or less is required for federal repair funding and a score of 50 or less is required for federal replacement funding.
- Health Index – Is the ratio of the current condition of each element to the perfect condition expressed as a score from 0-100.
- Structurally Deficient – A bridge is classified as structurally deficient if the deck, superstructure or substructure is rated in "poor" condition (0 to 4 on the NBI rating scale). A bridge can also be classified as structurally deficient if its load carrying capacity is significantly below current design standards or if a waterway below frequently overtops the bridge during floods.
- Functionally Obsolete – Deck Geometry rated 3 or less (bridge is too narrow) or under clearance of less than 15 feet.

BRIDGE MATRIX
MONROE COUNTY

NBI Average Ranking	Bridge No.	Structure Location	Key	Year Built (27)	Structure Length (49)	Deck Width (52)	NBI Deck (58)	NBI Super. (59)	NBI Sub. (60)	NBI Channel (61)	Operating Rating (64)	Posting (70)	Design Load (31)	Sufficiency Rating	Health Index	Functionally Obsolete	Structurally Deficient	Repair Cost Estimate	Replacement Cost Estimate	Structure Replacement Cost per SF	Widening Cost Estimate	Main Span Material (43A)	Comments
6.0	**904025**	GARRISON BIGHT	KEY WEST	1965	177 ft	41 ft	6	7	5	8	52.9 tons	5	HS 20	61.4	86.19	YES	NO	$1,126,841	$3,175,460	$287	N/A	5	Major spall and crack repair; missing and damaged timber in fender system; sagging and disconnected conduits; steel corrosion on bearing plates and lower fender hardware; navagational light lids loose; minor undermining; four expansion joints
6.3	**904110**	GEIGER KEY	GEIGER KEY	1955	125 ft	32 ft	6	7	6	7	55.4 tons	5	HS 20	87.1	71.24	NO	NO	$482,279	$1,475,478	$261	N/A	1	Finish superstructure replacement: major spall and crack repair; missing object marker
5.0	**904120**	SIMILAR SOUND	BIG COPPIT KEY	1957	51 ft	34 ft	5	5	5	7	53.2 tons	5	HS 20	43.8	62.95	YES	NO	$452,516	$829,183	$287	N/A	1	Superstructure replacement; major spall and crack repair; three expansion joints
8.0	**904140**	BAY POINT	SADDLEBUNCH KEY	1975	22 ft	21 ft	9	9	6	8	51.1 tons	5	HL 93	68.9	94.77	YES	NO	$41,760	$360,309	$261	N/A	1	Some spall and crack repair; missing anchor cable lock nuts on guardrails
8.0	**904152**	SHORE DRIVE	SUGARLOAF KEY	1991	35 ft	30 ft	8	8	8	8	61.8 tons	5	HS 20	89.8	99.94	NO	NO	$7,327	$629,547	$261	N/A	5	Good Condition - Seal asphalt cracks, Paint steel base plates
5.3	**904153**	SUGARLOAF BOULEVARD	SUGARLOAF KEY	1961	123 ft	26 ft	5	6	5	7	58 tons	5	HS 20	62.1	76.93	NO	NO	$819,478	$1,386,823	$290	N/A	5	Major spall and crack repair; erosion on slope; four expansion joints; consider methacrylate monomer on deck
6.7	**904155**	SUGARLOAF CREEK	SUGARLOAF KEY	1968	200 ft	29 ft	7	7	6	7	52.8 tons	5	HS 20	71.9	85.76	NO	NO	$436,800	$2,177,760	$261	N/A	5	Major spall repair; crack repair; longitudinal asphalt cracks, abutment slope settlement; abutment slope erosion, eight expansion joints
5.3	**904160**	OLD S.R. 4A (CR 939)	SUGARLOAF KEY	1968	82 ft	30 ft	5	5	6	6	56.9 tons	5	HS 20	84.3	55.12	NO	NO	$187,621	$1,069,882	$261	N/A	5	Major spall repair; crack repair; longitudinal asphalt cracks, abutment slope erosion, four expansion joints
6.5	**904250**	CARIBBEAN DRIVE	SUMMERLAND KEY	1960	24 ft	27 ft	N/A	6	7	6	58.5 tons	5	HS 20	65.7	70.76	NO	NO	$23,668	$527,209	$261	N/A	1	Minor spall and crack repair; underwater void; paint steel base plates
7.0	**904305**	WATSON BOULEVARD	BIG PINE KEY	1960	26 ft	27 ft	7	7	7	7	57.2 tons	5	HS 20	77.7	100.00	YES	NO	$64,556	$545,048	$261	N/A	5	Some spall and crack repair, longitudinal asphalt cracks, two expansion joints; minor undermining and erosion
6.3	**904307**	FERN AVENUE	BIG PINE KEY	1960	26 ft	28 ft	6	6	7	8	59.2 tons	5	HS 20	77.8	98.39	YES	NO	$49,967	$545,987	$261	N/A	5	Minor spall and crack repair; two expansion joints; two missing object markers
8.3	**904310**	S.R. 940 - LEG A (WATSON BOULEVARD)	BIG PINE KEY	1965	28 ft	32 ft	9	9	7	7	53.6 tons	5	HL 93	71.3	98.75	NO	NO	$6,724	$581,664	$261	N/A	5	Good Condition - New deck and railing; minor erosion at abutments
4.2	**904320**	NO NAME KEY*	NO NAME KEY	1967	2231 ft	34 ft	5	6	3	7	35.6 tons	5	HS 20	6.0	51.99	NO	YES	$2,997,676	$20,400,000	$267	$10,600,000.00	5	Bridge repair project underway - extensive deck repair, CP pile jackets, substructure metalizing, spall/delamination repair
7.7	**904600**	TOM'S HARBOR CHANNEL	DUCK KEY	1967	247 ft	34 ft	8	8	7	7	48.2 tons	5	HL 93	63.0	94.00	NO	NO	$24,731	$2,863,229	$287	N/A	5	Minor undermining and scour; one joint replacement, minor spall and crack repair in beam ends and diaphragms
7.0	**904602**	TRUMAN BRIDGE	DUCK KEY	1955	77 ft	26 ft	N/A	7	7	7	43.5 tons	5	HS 20	63.4	75.49	NO	NO	$159,439	$1,304,881	$316	$528,627.00	1	Large void in retaining wall; undermining under each bent and abutment; minor spall and crack repair; four expansion joints
5.8	**904603**	BIMINI DRIVE	DUCK KEY	1955	43 ft	26 ft	6	6	7	5	58 tons	5	HS 20	71.7	77.98	NO	NO	$136,739	$904,624	$383	$391,447.00	5	Significant spall repair; underming both ends; replace one guardrail post; two expansion joints; steel corrosion of reinforcing steel plates
5.5	**904604**	HARBOR DRIVE	DUCK KEY	1955	56 ft	27 ft	7	5	6	5	54.6 tons	5	HS 20	60.3	77.52	NO	NO	$438,791	$1,012,932	$315	$429,920.00	5	Major delamination repair in retaining walls; two expansion joints; major undermining; steel corrosion in reinforcing steel plates
5.8	**904606**	SEAVIEW DRIVE	DUCK KEY	1955	56 ft	26 ft	7	6	6	5	54.6 tons	5	HS 20	72.6	78.62	NO	NO	$104,213	$1,012,932	$315	$429,920.00	5	Some spall repair; underming both ends; two expansion joints; steel corrosion of reinforcing steel plates
6.0	**904908**	VALOIS BOULEVARD	KEY LARGO	1995	52 ft	31 ft	6	6	6	8	39.2 tons	5	HS 20	66.6	94.14	NO	NO	$129,660	$791,034	$261	N/A	5	Spall repair, expansion joints, seal longitudinal asphalt cracks
6.3	**904910**	BAHAMA ROAD	KEY LARGO	1962	24 ft	20 ft	7	5	7	8	56.5 tons	5	HS 20	80.8	96.23	NO	NO	$76,479	$525,331	$261	N/A	1	Significant spall repiar on concrete beams, methacrylate sealer for deck.
7.0	**904980**	STEAM BOAT CREEK	KEY LARGO	1968	316 ft	38 ft	7	7	7	7	57.5 tons	5	HS 20	70.7	96.32	NO	NO	$107,613	$3,438,279	$261	N/A	5	Spall repair, crack repair and expansion joint rehab. Possible future pile jacket job (not included in repair estimate).
6.3	**904982**	TUBBY'S CREEK	KEY LARGO	1969	101 ft	38 ft	6	6	7	8	48.9 tons	5	H 20	69.5	94.60	NO	NO	$121,001	$1,311,487	$261	N/A	5	Spall repair, concrete crack repair, longitudinal asphalt crack sealing and expansion joint rehab.
7.3	**904984**	MOSQUITO CREEK	KEY LARGO	1969	101 ft	38 ft	7	7	8	8	48.9 tons	5	H 20	69.5	99.05	NO	NO	$118,037	$1,300,950	$261	N/A	5	Spall repair, concrete crack repair, longitudinal asphalt crack sealing and expansion joint rehab.
6.7	**904986**	SAUNDER'S CREEK	KEY LARGO	1969	101 ft	36 ft	7	7	6	7	63.7 tons	5	HS 20	93.0	96.46	NO	NO	$61,522	$1,249,208	$261	N/A	5	Substructure spall repair, some superstructure spall repair and guard rail replacement.
5.7	**904990**	CARD SOUND BRIDGE *	KEY LARGO	1969	2775 ft	38-33ft	6	6	5	7	66.6 tons	5	HS 20	56.6	78.87	NO	NO	$4,876,999	$32,600,000	$240	$10,200,000.00	3 & 5	Repair project awaiting funding - extensive substructure repair, pile jackets, substructure metalizing, spall repair, steel paint system
6.0	**N/A**	OCEAN BAY DRIVE	KEY LARGO	N/A	18 ft	30 ft	6	6	6	8	N/A	N/A	N/A	N/A	N/A	N/A	N/A	$117,289	$468,998	$261	N/A	1	**Not on NBI schedule**; Significant spall repair on arch and railings.
8.7	**N/A**	PEDESTRIAN BRIDGE (OCEAN BAY DRIVE)	KEY LARGO	N/A	63 ft	8 ft	9	9	8	8	N/A	N/A	N/A	N/A	N/A	N/A	N/A	$2,948	N/A	N/A	N/A	3	**Not on NBI schedule**; Aluminum truss pedestrian bridge in good condition, add expansion joints and missing anchorage hardware

*Duck Key Widening Costs were extrapolated from The Truman Bridge Widening Report (Metric Engineering)
*No Name Key Bridge Costs from previous Design Development Report
*Card Sound Bridge Costs from previous Design Development Report

Posting:
5 - At/Above Legal Loads

Main Span Material:
1 - Reinforced Concrete
3 - Steel
5 - Prestressed Concrete

Figure 1 - Bridge Matrix

4.0 Individual Bridge Recommendations

4.0 Bridge Recommendations

The following recommendations were made after a thorough review of the bridge inspection reports, available plans, other available reports/documentation and a site visit. Estimated repair quantities are based on current deficiencies and present day unit costs. A multiplier of 2.0 was used to increase spall repair deficiency sizes to allow for the additional quantity that may be realized during construction. In addition, historical bridge replacement unit costs were increased by 40% to account for the additional cost of construction in Monroe County. It is possible that the estimated repair and replacement costs could increase with time as deficiency quantities increase and unit costs change.

4.1 Garrison Bight (Bridge # 904025)

This bridge services Palm Avenue over Garrison Bight in Key West. It was constructed in 1965, has a Sufficiency Rating of 61.4 and a Health Index of 86.19. This AASHTO Beam Bridge is considered functionally obsolete as a result of the substandard barriers. The bridge is undergoing deterioration of the deck, railings, beams, bents and fender system. In addition, the approach roadway pavement is failing due to high truck and traffic volume.

The repair cost is estimated to be $1,126,841 and the replacement cost is estimated to be $3,175,460. It is estimated that a repair project would extend the service life of the bridge for 15-20 years. The recommended course of action is to start a repair project by 2017, complete a PD&E evaluation by the year 2027 with the goal of replacing the bridge by 2030.

4.2 Geiger Key (Bridge # 904110)

This bridge services Boca Chica Road (CR 941) over Geiger Key Cut in Geiger Key. It was constructed in 1955, has a Sufficiency Rating of 87.1 and a Health Index of 71.24. This reinforced beam bridge was partially re-decked in 2011. This project replaced the outside portions of the deck, the exterior beams and upgraded the barriers to crash tested F-Shape Barriers. In addition, typical spall repairs were completed on the other bridge elements. It is now developing new deficiencies in the beams and bents. In addition, the portion of the deck that was not replaced is rapidly delaminating along the interface with the recently cast concrete. A future repair project should include the replacement of the portions of the deck and beams that have not yet been replaced. This would eliminate the accelerated deterioration that is occurring in the deck as a result of the halo effect (increased corrosive activity adjacent to recent concrete repairs).

The repair cost is estimated to be $482,279 and the replacement cost is estimated to be $1,475,478. It is estimated that a repair project would extend the service life of the bridge for 10-15 years. The recommended course of action is to start a repair project by 2018 with the goal of replacing the bridge by 2025. However, it should be noted that this bridge only services three residences and was recently repaired. Therefore, the county may consider a reduced priority in the work program as long as careful monitoring of the ongoing deck deterioration is continued.

4.3 Similar Sound (Bridge # 904120)

This bridge services Boca Chica Road (CR 941) over Similar Sound Local Canal in Big Coppitt Key. It was constructed in 1957, has a Sufficiency Rating of 43.8 and a Health Index of 62.95. It currently exhibits extensive spalling and delamination in the deck, reinforced concrete beams and diaphragms. Additionally, there are many spalled/delaminated areas associated with the bents, piles and retaining walls. A repair project for this bridge has recently been let through the FDOT District 6 Maintenance Office. The repair project will consist of conventional spall repair of the damaged elements. Careful monitoring of this bridge should be continued after the repair project to evaluate any halo effect that may occur, as it is currently occurring on the superstructure of the nearby Geiger Key Bridge that recently underwent similar repairs.

The repair project that is scheduled to begin in 2015 is estimated to be $650,000. A superstructure replacement is estimated to be $452,516 and the bridge replacement cost is estimated to be $829,183. It is estimated that a repair project would extend the service life of the bridge for 10-15 years. Therefore, the recommended course of action is to complete the scheduled repair project with the goal of replacing the bridge by the year 2025.

4.4 Bay Point (Bridge # 904140)

This bridge services Palm Drive over Bay Point Canal in Saddle Bunch Key. It was constructed in 1975, has a Sufficiency Rating of 68.9 and a Health Index of 94.77. The superstructure of this short flat slab bridge was replaced in 2009. It currently exhibits some end bent spalling, approach slab delaminations and expansion joint header delaminations. All deficiencies are minor in nature at this time.

The repair cost is estimated to be $41,760 and the replacement cost is estimated to be $360,309. It is estimated that the remaining service life of the bridge is 35-40 years with future minor repairs. Any repair project on this bridge will be very small in scale and a low priority at this time.

Therefore, the recommended course of action is to start a repair project by 2025 and attempt to make it part of other bridge repair projects in the area to increase the size of the contract.

4.5 Shore Drive (Bridge # 904152)

This bridge services Shore Drive over a canal in Sugarloaf Key. It was constructed in 1991, has a Sufficiency Rating of 89.8 and a Health Index of 99.94. This newer prestressed slab unit bridge currently exhibits only minor asphalt cracks and minor corrosion of the railing base plates. The curb and traffic railing are non-crash tested sub-standard barriers. However, due to the low traffic volume and low speed limit, it can be considered a lower priority.

The repair cost is estimated to be $7,327 and the replacement cost is estimated to be $629,547. It is estimated that the remaining service life of the bridge is 50-55 years with future minor repairs. Any repair project on this bridge will be very small in scale and a low priority at this time. Therefore, the recommended course of action is to start a repair project by 2025 and attempt to make it part of other bridge repair projects in the area to increase the size of the contract.

4.6 Sugarloaf Boulevard (Bridge # 904153)

This bridge services Sugarloaf Boulevard over an un-named channel in Sugarloaf Key. It was constructed in 1961, has a Sufficiency Rating of 62.1 and a Health Index of 76.93. This AASHTO Beam Bridge currently exhibits extensive spalling and delamination in the deck, beams, diaphragms and bent caps. Repairing or replacing this bridge should be considered a near term priority. Due to the extensive nature of the deck deficiencies and the sub-standard barriers, a deck replacement is a better solution than conventional spall repair, however the four beam typical section has no center line beam. Therefore a deck replacement is difficult without a temporary widening or temporary bridge resulting in a higher level of permitting and cost. In addition, the substructure requires extensive repairs as the bent caps are also exhibiting full length spall/delaminations. As a result, a bridge replacement option is the more logical solution when compared to a deck replacement option.

The repair alternate for this bridge assumes conventional spall repair for all concrete elements as a deck replacement is not considered a viable option due to the reasons listed above. The repair cost is estimated to be $819,478 and the replacement cost is estimated to be $1,386,823. It is estimated that a repair project would extend the service life of the bridge for 15-20 years. The recommended course of action for this bridge is to forego the bridge repair option and move directly to replacement. This would incur a higher cost initially, but eliminate the need for an

intermediate repair project and be a long term solution with an estimated 75 year design life. The replacement concept assumed for the cost estimate includes a sidewalk and crash tested barriers, resulting in great safety improvement for the community. In addition, modern bridge construction and materials would allow for the channel to be spanned entirely from abutment to abutment, eliminating the need for intermediate pile bents in the water. Not only will this be a safety improvement for channel navigation, but it will eliminate the inevitable maintenance of pile bents in a saltwater environment. It is recommended to begin design and permitting of a bridge replacement in the very near future with the goal of replacing this bridge by 2020 in order to avoid a costly repair project that will only slightly extend the service life of the bridge.

4.7 Sugarloaf Creek (Sammy's Creek) (Bridge # 904155)

This bridge services Old State Road 4A (CR 939) over Sugarloaf Creek (Sammy's Creek) in Sugarloaf Key. It was constructed in 1968, has a Sufficiency Rating of 71.9 and a Health Index of 85.76. This prestressed slab unit bridge is currently undergoing deterioration of the slab units, railings, bents, piles and slope protection. In addition, the asphalt overlay is cracked at the interface between the slab units, allowing water and debris to pass through the asphalt and into the superstructure. This bridge services very little traffic as there are only a two residences located to the west of Sugarloaf Creek.

The repair cost is estimated to be $436,800 and the replacement cost is estimated to be $2,177,760. It is estimated that a repair project would extend the service life of the bridge for 20-25 years. The recommended course of action is to start a repair project by 2025, with the goal of replacing the bridge by 2035.

4.8 Old SR 4A (CR 939) (Bridge # 904160)

This bridge services Old State Road 4A (CR 939) over an un-named Sugarloaf Canal in Sugarloaf Key. It was constructed in 1968, has a Sufficiency Rating of 84.3 and a Health Index of 55.12. This prestressed slab unit bridge is currently undergoing deterioration of the slab units, railings, bents, piles and slope protection. In addition, the asphalt overlay has several areas of fire damage and is cracked at the interface between the slab units, allowing water and debris to pass through the asphalt and into the superstructure. This bridge is closed to traffic but it can be accessed by walking east approximately 0.25 miles from Sugarloaf Boulevard.

The repair cost is estimated to be $187,621 and the replacement cost is estimated to be $1,069,882. It is estimated that a repair project would extend the service life of the bridge for

20-25 years. However, full demolition and removal of this structure should be considered as this bridge is currently closed to traffic and the approach roadway is no longer maintained. Demolition cost is estimated at $88,560. The recommended course of action is to demolish and remove the bridge. This is the most cost effective alternative and it will eliminate any future repair costs.

4.9 Caribbean Drive (Bridge # 904250)

This bridge services Caribbean Drive over Summerland Key Cove in Summerland Key. It was constructed in 1960, has a Sufficiency Rating of 65.7 and a Health Index of 70.76. This concrete arch bridge currently exhibits some spalling and honey combing of the arch underside, cracking of the curbs and sidewalks, cracking of the asphalt overlay, corrosion of the railing connection hardware and undermining along the channel edge. All deficiencies are minor in nature at this time. The curb and railing system are sub-standard and the arch superstructure appears to be founded directly on the natural rock.

The repair cost is estimated to be $23,668 and the replacement cost is estimated to be $527,209. It is estimated that the remaining service life of the bridge is 20-25 years with future minor repairs. Any repair project on this bridge will be very small in scale and a low priority at this time. Therefore, the recommended course of action is to start a repair project by 2025 and attempt to make it part of other bridge repair projects in the area to increase the size of the contract.

Assuming that the bridge remains in service for a significant time, the County may consider a barrier upgrade as part of an overall bridge safety improvement project. The estimated cost of a barrier upgrade is $250,295. This cost is inflated due to the utility impacts and the possible bridge strengthening required to upgrade the barriers. The relative low cost of bridge replacement will likely make a barrier upgrade project economically unfeasible and a bridge replacement would be the preferred alternative for improving safety.

4.10 Watson Boulevard (Bridge # 904305)

This bridge services Watson Boulevard over Watson Cut in Big Pine Key. It was constructed in 1960, has a Sufficiency Rating of 77.7 and a Health Index of 100.00. This prestressed slab unit bridge currently exhibits delaminations in the curbs, cracks in the asphalt overlay and undermining along the channel edge. All deficiencies are minor in nature at this time.

The repair cost is estimated to be $64,556 and the replacement cost is estimated to be $545,048. It is estimated that the remaining service life of the bridge is 20-25 years with future minor

repairs. Any repair project on this bridge will be very small in scale and a low priority at this time. Therefore, the recommended course of action is to start a repair project by 2025 and attempt to make it part of other bridge repair projects in the area to increase the size of the contract.

4.11 Fern Avenue (Bridge # 904307)

This bridge services Fern Avenue over Joe's Canal in Big Pine Key. It was constructed in 1960, has a Sufficiency Rating of 77.8 and a Health Index of 98.39. This prestressed slab unit bridge currently exhibits spalls in the sidewalk, spalls in the curb, spalls in the slab units, cracks in the asphalt overlay and voids along the natural rock abutments. All deficiencies are fairly minor in nature at this time. However, it is recommended to seal the cracks in the asphalt overlay in an effort to reduce the ongoing prestressed slab unit deterioration.

The repair cost is estimated to be $49,967 and the replacement cost is estimated to be $545,987. It is estimated that the remaining service life of the bridge is 20-25 years with future minor repairs. Any repair project on this bridge will be very small in scale and a low priority at this time. Therefore, the recommended course of action is to start a repair project by 2025 and attempt to make it part of other bridge repair projects in the area to increase the size of the contract.

4.12 SR 940 – Leg A (Watson Boulevard) (Bridge # 904310)

This bridge services SR 940 – Leg A (Watson Boulevard) over an un-named channel in Big Pine Key. It was constructed in 1965, has a Sufficiency Rating of 71.3 and a Health Index of 98.75. The superstructure of this bridge was replaced in 2014. It consists of a prestressed slab unit superstructure with a cast in place reinforced concrete deck. Standard F-Shape barriers and 15' approach slabs were also constructed. Except for minor modifications and a new coating, the existing substructure has remained in place. Currently, the only deficiencies are the voids in the natural rock below the abutments.

The repair cost is estimated to be $6,724 and the replacement cost is estimated to be $581,664. It is estimated that the remaining service life of the bridge is 35-40 years with future minor repairs. The newly constructed superstructure is supported by the existing 50 year old abutments. Plans are not available for the existing foundations. As a result, it is difficult to increase the remaining service life of the bridge beyond 35-40 years.

4.13 No Name Key Bridge (Bridge # 904320)

This bridge services SR 4A (Watson Boulevard) over Bogie Channel in Big Pine Key/No Name Key. It was constructed in 1967, has a Sufficiency Rating of 6.0 and a Health Index of 51.99. A $2.9 M bridge repair project will begin in 2014 on this AASHTO Beam Bridge. The repair plans include extensive deck repair, cathodic protection pile jackets, substructure metalizing, spall/delamination repair and joint repair.

The low bid repair cost is $2,997,676 and the replacement cost is estimated to be $20,400,000. Although a major repair project is currently underway for this bridge, it will likely continue to see accelerated deterioration due to the exposed low level geometry of the bridge and the additional salt water exposure from fishing activities that are frequently occurring on the bridge. It is highly likely that future major repair projects will be required for the bridge to remain in service. It is estimated that the remaining service life of the bridge is 10 years with the repair project that is underway. The recommended course of action is to complete the current repair project, evaluate and satisfy the NEPA requirements by the year 2020 with the goal of replacing the bridge by 2025. See the No Name Key Design Development Report that was submitted to Monroe County on August 2012 for a more in depth discussion of repair and replacement alternatives.

4.14 Tom's Harbor Channel (Bridge # 904600)

This bridge services Duck Key Drive over Tom's Harbor Channel in Duck Key. It was constructed in 1967, has a Sufficiency Rating of 63.0 and a Health Index of 94.00. This AASHTO Beam Bridge was repaired in 2013. The repairs included a deck replacement, ADA compliant sidewalks, crash tested barriers, spall/delamination repair, cathodic protection pile jackets, expansion joints, steel bearing painting and a Class 5 finish applied to some concrete elements. A few end beam/diaphragm spalls remain. In addition, there is some undermining and scour occurring at the slope protection that should be addressed.

The repair cost is estimated to be $24,731 and the replacement cost is estimated to be $2,863,229. Taking into account the recent repair project, it is estimated that the remaining service life of the bridge is 20-25 years. The recommended course of action is to start a small repair project by 2025, evaluate and satisfy the NEPA requirements by the year 2030 with the goal of replacing the bridge by 2035.

4.15 Truman Bridge (Bridge # 904602)

This bridge services Duck Key Drive over Duck Key Channel in Duck Key. It was constructed in 1955, has a Sufficiency Rating of 63.4 and a Health Index of 75.49. This triple arch bridge with decorative pineapple railing is the first of several signature bridges associated with the Duck Key neighborhood. The bridge is a very narrow, two lane bridge with a very steep vertical curve that limits the sight distance of the user. This results in an undesirable condition for pedestrians and oversized vehicles that use the bridge. It is currently exhibiting spalling and cracking of the arches and retaining walls. There is a large spall that is releasing approach fill at the toe of the north wall and there is a large amount of scour and undermining present at all abutments and intermediate piers. A portion of the decorative railing was replaced after a recent vehicle strike.

The repair cost is estimated to be $159,439 and the replacement cost is estimated to be $1,304,881. The estimated cost to widen the structure to accommodate pedestrian facilities is $528,627 (See the Metric Engineering Widening Report). It is estimated that the remaining service life of the bridge is 20-25 years. As a result of the safety concerns previously described, the recommended course of action is to move forward with a bridge replacement with the goal of beginning construction by 2020. The replacement design should only begin after first evaluating and satisfying the NEPA requirements due to the historic nature of the bridge. If the county elects not to move forward with a bridge replacement, this bridge should be programed for scour countermeasures and bridge repairs by the year 2020.

See Appendix A for the Duck Key Bridge Replacement Presentation.

4.16 Bimini Drive (Bridge # 904603)

This bridge services Bimini Drive over Sam's Canal in Duck Key. It was constructed in 1955, has a Sufficiency Rating of 71.7 and a Health Index of 77.98. This concrete channel beam bridge with a low arch and decorative papaya railings is the second signature bridge associated with Duck Key. The bridge is a very narrow, two lane bridge with a very steep vertical curve that limits the sight distance of the user. This results in an undesirable condition for pedestrians and oversized vehicles that use the bridge. The channel beams were previously strengthened with through bolted steel plates. The most current inspection report noted movement in the plates with passing vehicles so it is unclear what effect they have on current bridge load capacity.

The bridge is currently exhibiting significant spalls, delaminations and cracks in the channel beam flanges, abutments, railings and retaining walls. In addition, the through bolted steel plates are corroded, the natural rock abutments are scoured and undermined, the approach asphalt is cracked and settled near both abutments and the guardrail is damaged from a vehicle strike.

The repair cost is estimated to be $136,739 and the replacement cost is estimated to be $904,624. The estimated cost to widen the structure to accommodate pedestrian facilities is $391,447. It is estimated that the remaining service life of the bridge is 15-20 years. As a result of the safety concerns previously described, the recommended course of action is to move forward with a bridge replacement with the goal of beginning construction by 2020. The replacement design should only begin after first evaluating and satisfying the NEPA requirements due to the historic nature of the bridge. If the county elects to not move forward with a bridge replacement, this bridge should be programed for bridge repairs and scour countermeasures by the year 2020. The ongoing deterioration of the concrete channel beams should be closely monitored until a replacement or repair project can be completed.

See Appendix A for the Duck Key Bridge Replacement Presentation.

4.17 Harbor Drive (Bridge # 904604)

This bridge services Harbor Drive over Joe's Canal in Duck Key. It was constructed in 1955, has a Sufficiency Rating of 60.3 and a Health Index of 77.52. This concrete channel beam bridge has a low arch and a decorative lace and papaya railing. It is the third signature bridge associated with Duck Key. The bridge is a very narrow, two lane bridge with a very steep vertical curve that limits the sight distance of the user. This results in an undesirable condition for pedestrians and oversized vehicles that use the bridge. The channel beams were previously strengthened with through bolted steel plates.

The bridge is currently exhibiting significant spalls, delaminations and cracks in the channel beam flanges, abutments and railings. There are very large delaminations associated with the retaining walls. In addition, the through bolted steel plates are heavily corroded and the bridge asphalt is cracked and settled. The undermining extends to the point to where the abutment piles are visible. This bridge exhibits more undermining than the other Duck key bridges, possibly due to higher flow velocities through this canal.

The repair cost is estimated to be $438,791 and the replacement cost is estimated to be $1,012,932. The estimated cost to widen the structure to accommodate pedestrian facilities is $429,920. It is estimated that the remaining service life of the bridge is 15-20 years. As a result of the safety concerns previously described, the recommended course of action is to move forward with a bridge replacement with the goal of beginning construction by 2020. The replacement design should only begin after first evaluating and satisfying the NEPA requirements due to the historic nature of the bridge. If the county elects to not move forward with a bridge replacement, this bridge should be programed for bridge repairs and scour countermeasures by

the year 2020. The ongoing deterioration of the concrete channel beams and abutment undermining should be closely monitored until a replacement or repair project can be completed.

4.18 Seaview Drive (Bridge # 904606)

This bridge services Seaview Drive over Duck Key Canal in Duck Key. It was constructed in 1955, has a Sufficiency Rating of 72.6 and a Health Index of 78.62. This concrete channel beam bridge has a low arch and a cylindrical column and pineapple railing. It is the fourth signature bridge associated with Duck Key. The bridge is a very narrow, two lane bridge with a very steep vertical curve that limits the sight distance of the user. This results in an undesirable condition for pedestrians and oversized vehicles that use the bridge. The channel beams were previously strengthened with through bolted steel plates.

The bridge is currently exhibiting significant spalls, delaminations and cracks in the channel beam flanges, abutments, railings and retaining walls. In addition, the through bolted steel plates are corroded and the natural rock abutments are scoured and undermined.

The repair cost is estimated to be $104,213 and the replacement cost is estimated to be $1,012,932. The estimated cost to widen the structure to accommodate pedestrian facilities is $429,920. It is estimated that the remaining service life of the bridge is 15-20 years. As a result of the safety concerns previously described, the recommended course of action is to move forward with a bridge replacement with the goal of beginning construction by 2020. The replacement design should only begin after first evaluating and satisfying the NEPA requirements due to the historic nature of the bridge. If the county elects to not move forward with a bridge replacement, this bridge should be programed for bridge repairs and scour countermeasures by the year 2020. The ongoing deterioration of the concrete channel beams should be closely monitored until a replacement or repair project can be completed.

4.19 Valois Boulevard (Bridge # 904908)

This bridge services Valois Boulevard over a Canal in Key Largo. It was constructed in 1995, has a Sufficiency Rating of 66.6 and a Health Index of 94.14. This prestressed flat slab bridge currently exhibits some spalling on the underside of the slab units, railings, curbs and end bent caps. There are also bridge length longitudinal cracks at the slab unit joints on the asphalt overlay. These cracks are allowing water and debris to pass through the asphalt and into the bridge superstructure.

The repair cost is estimated to be $129,660 and the replacement cost is estimated to be $791,034. It is estimated that the remaining service life of the bridge is 35-40 years with future minor repairs. Any repair project on this bridge will be somewhat small in scale. Therefore, the recommended course of action is to start a repair project by 2018 and attempt to make it part of other bridge repair projects in the area to increase the size of the contract.

4.20 Bahama Road (Bridge # 904910)

This bridge services Bahama Road over Doug's Canal in Key Largo. It was constructed in 1962, has a Sufficiency Rating of 80.8 and a Health Index of 96.23. This reinforced concrete beam bridge currently exhibits some significant spalling on the underside of the beams with large areas of reinforcing exposed. There is also map cracking present on the exposed concrete riding surface of the deck. This bridge would be a good candidate for a methacrylate sealer. The end bents are not visible through the natural rock abutments.

The repair cost is estimated to be $76,479 and the replacement cost is estimated to be $525,331. It is estimated that the remaining service life of the bridge is 20-25 years, with some significant near term repairs. Any repair project on this bridge will be somewhat small in scale. Therefore, the recommended course of action is to start a repair project by 2018 and attempt to make it part of other bridge repair projects in the area to increase the size of the contract.

4.21 Steam Boat Creek (Bridge # 904980)

This bridge services Card Sound Road (CR 905A) over Steam Boat Creek in North Key Largo. It was constructed in 1968, has a Sufficiency Rating of 70.7 and a Health Index of 96.32. This AASHTO Beam Bridge was repaired in 2006. The repairs included spall repair and slope protection repair. Additional deficiencies have developed since this previous repair. Currently, the bridge has spalls and delaminations developing on the railings, sidewalks, beams, caps and piles. In addition, the expansion joints are in need of rehabilitation as the asphalt overlay at the expansion joints is failing and settling into the open joints.

The repair cost is estimated to be $107,613 and the replacement cost is estimated to be $3,438,279. It is estimated that the remaining service life of the bridge is 20-25 years. The recommended course of action is to start a full repair project by 2025, evaluate and satisfy the NEPA requirements by the year 2030 with the goal of replacing the bridge by 2035. Additionally, it is recommended to include this bridge as part of a small expansion joint rehabilitation project

as soon as possible. This will minimize water and debris intrusion into the bridge superstructure and help to minimize future repairs.

4.22 Tubby's Creek (Bridge # 904982)

This bridge services Card Sound Road (CR 905A) over Tubby's Creek in North Key Largo. It was constructed in 1969, has a Sufficiency Rating of 69.5 and a Health Index of 94.60. This Prestressed Slab Unit Bridge was repaired in 2006. The repairs included pile jackets, spall repair and slope protection repair. Additional deficiencies have developed since this previous repair. Currently, the bridge has spalls and delaminations developing on the railings, sidewalks, prestressed slab units and caps. In addition, the expansion joints are in need of rehabilitation as the asphalt overlay at the expansion joints is failing and settling into the open joints.

The repair cost is estimated to be $121,001 and the replacement cost is estimated to be $1,311,487. It is estimated that the remaining service life of the bridge is 20-25 years. The recommended course of action is to start a full repair project by 2025, evaluate and satisfy the NEPA requirements by the year 2030 with the goal of replacing the bridge by 2035. Additionally, it is recommended to include this bridge as part of a small expansion joint rehabilitation project as soon as possible. This will minimize water and debris intrusion into the bridge superstructure and help to minimize future repairs.

4.23 Mosquito Creek (Bridge # 904984)

This bridge services Card Sound Road (CR 905A) over Mosquito Creek in North Key Largo. It was constructed in 1969, has a Sufficiency Rating of 69.5 and a Health Index of 99.05. This Prestressed Slab Unit Bridge was repaired in 2006. The repairs included pile jackets and spall repair. Additional deficiencies have developed since this previous repair. Currently, the bridge has spalls and delaminations developing on the railings, sidewalks, prestressed slab units and caps. In addition, the expansion joints are in need of rehabilitation as the asphalt overlay at the expansion joints is failing and settling into the open joints.

The repair cost is estimated to be $118,037 and the replacement cost is estimated to be $1,300,950. It is estimated that the remaining service life of the bridge is 20-25 years. The recommended course of action is to start a full repair project by 2025, evaluate and satisfy the NEPA requirements by the year 2030 with the goal of replacing the bridge by 2035. Additionally, it is recommended to include this bridge as part of a small expansion joint rehabilitation project

as soon as possible. This will minimize water and debris intrusion into the bridge superstructure and help to minimize future repairs.

4.24 Saunder's Creek (Bridge # 904986)

This bridge services Card Sound Road (CR 905A) over Saunder's Creek in North Key Largo. It was constructed in 1969, has a Sufficiency Rating of 93.0 and a Health Index of 96.46. A superstructure replacement was completed on this Prestressed Slab Unit Bridge in 2006. Additional repairs included pile jackets and substructure spall repair. Additional deficiencies have developed since this previous repair. Currently, the bridge has spalls and delaminations developing on the new cast in place concrete deck and the prestressed slab units. In addition, the bent caps are now spalling and delaminating and the guard rails are heavily corroded.

The repair cost is estimated to be $61,522 and the replacement cost is estimated to be $1,249,208. It is estimated that the remaining service life of the bridge is 20-25 years. The recommended course of action is to start a full repair project by 2025, evaluate and satisfy the NEPA requirements by the year 2030 with the goal of replacing the bridge by 2035.

4.25 Card Sound Bridge (Bridge # 904990)

This bridge services Card Sound Road (CR 905A) over Barnes Sound/Card Sound in North Key Largo. It was constructed in 1969, has a Sufficiency Rating of 56.6 and a Health Index of 78.87. Repair plans are currently in the final phase of production and permitting has been completed for the repairs. The repair plans include extensive substructure repair, substructure metalizing, steel girder paint system and repairs, spall/delamination repair, joint repair and fender system repair.

The repair cost is estimated to be $4,876,999 and the replacement cost is estimated to be $32,600,000. The estimated cost of a bridge widening to accommodate pedestrian traffic is $10,200,000. Although a major repair project is currently planned for this bridge, it will likely continue to see accelerated deterioration due to the exposed geometry of the bridge. It is highly likely that future major repair projects will be required for the bridge to remain in service. It is estimated that the remaining service life of the bridge is 10-15 years with the repair project that is underway. The recommended course of action is to complete the current repair project, evaluate and satisfy the NEPA requirements by the year 2025 with the goal of replacing the bridge by 2030. See the Card Sound Design Development Report that was submitted to Monroe County on October 2013 for a more in depth discussion of repair, widening and replacement alternatives.

4.26 Ocean Bay Drive (No Inspection Report)

This bridge services Ocean Bay Drive over a Canal in Key Largo. It was likely constructed in the 1980's based on the time of construction of the nearby homes. This arch bridge spans only 18' and it does not meet the minimum 20' span requirements to be eligible for a bridge inspection report by the FDOT. During a recent field review, significant spalling and delaminations were noted on the sides of the arch, undersides of the arch and at the abutments with some areas of exposed reinforcing steel. In addition, the railings are delaminated and the asphalt riding surface is cracking.

The repair cost is estimated to be $117,289 and the replacement cost is estimated to be $468,998. It is estimated that the remaining service life of the bridge is 20-25 years, with some significant near term repairs. Any repair project on this bridge will be somewhat small in scale. Therefore, the recommended course of action is to start a repair project by 2018 and attempt to make it part of other bridge repair projects in the area to increase the size of the contract.

4.27 Ocean Bay Drive - Pedestrian Bridge (No Inspection Report)

This bridge services the Ocean Bay Drive pedestrian traffic over a Canal in Key Largo. Located adjacent to the Ocean Bay Drive vehicular bridge, this aluminum truss pedestrian bridge was recently constructed and is in very good condition. It is not eligible for a bridge inspection report by the FDOT as it only services pedestrian traffic. During a recent field inspection, it was noted that no expansion joints were present and some of the anchorage hardware was missing.

The repair cost is estimated to be $2,948 to add the expansion joints and replace the missing hardware. It is estimated that the remaining service life of the bridge is over 50 years since this bridge was recently constructed using corrosion resistant materials. Any repair project on this bridge will be somewhat small in scale. Therefore, the recommended course of action is to complete these small repairs as part of the same repair contract as the adjacent Ocean Bay Drive Vehicular Bridge.

5.0 Work Program Priority

5.0 Work Program Priority

5.1 Priority Ranking

This purpose of this section is to prioritize the bridge maintenance, repair and replacement projects that were proposed in the previous section. This will help the County allocate funding to the most needed repairs and set budgets for future bridge projects. See Figure 2 on the following page for the list of County owned bridges, in order based on Priority Ranking. The priority ranking closely follows the NBI Average Ranking that was calculated from the Bridge Inspection Reports, however, it allows for some engineering judgment to account for additional considerations such as bridge safety, bridge age, bridge location and bridge usage or average daily traffic. Some bridges were also shifted in the rankings so that they are logically grouped with similar bridge repairs of nearby bridges. This table also includes the recommended timeframe for beginning a rehabilitation or replacement project.

Priority Ranking	NBI Average Ranking	Bridge No.	Structure Location	Start Repair or Replacement Project Within (Years)	Estimated Remaining Service Life (Years)
1	4.2	904320	NO NAME KEY	2014	10
1	5.0	904120	SIMILAR SOUND	2015	10 - 15
1	5.3	904153	SUGARLOAF BOULEVARD	2016	15 - 20
1	5.7	904990	CARD SOUND BRIDGE	2015	15 - 20
2	5.5	904604	HARBOR DRIVE	2020	15 - 20
2	5.8	904603	BIMINI DRIVE	2020	15 - 20
2	5.8	904606	SEAVIEW DRIVE	2020	15 - 20
2	7.0	904602	TRUMAN BRIDGE	2020	20 - 25
2	6.0	904025	GARRISON BIGHT	2017	15 - 20
2	6.0	904908	VALOIS BOULEVARD	2018	35 - 40
2	6.0	N/A	OCEAN BAY DRIVE	2018	20 - 25
2	6.3	904910	BAHAMA ROAD	2018	20 - 25
3	6.3	904110	GEIGER KEY	2018	10 - 15
3	5.3	904160	OLD S.R. 4A (CR 939)	2018	20 - 25
3	6.3	904307	FERN AVENUE	2025	20 - 25
3	6.5	904250	CARIBBEAN DRIVE	2025	20 - 25
3	6.7	904155	SUGARLOAF CREEK	2025	20 - 25
3	6.7	904986	SAUNDER'S CREEK	2025	20 - 25
3	7.0	904305	WATSON BOULEVARD	2025	20 - 25
3	6.3	904982	TUBBY'S CREEK	2016 & 2025 *	20 - 25
3	7.0	904980	STEAM BOAT CREEK	2016 & 2025 *	20 - 25
3	7.3	904984	MOSQUITO CREEK	2016 & 2025 *	20 - 25
3	7.7	904600	TOM'S HARBOR CHANNEL	2025	20 - 25
4	8.0	904140	BAY POINT	2025	35 - 40
4	8.0	904152	SHORE DRIVE	2025	50 - 55
4	8.3	904310	S.R. 940 - LEG A (WATSON BOULEVARD)	2030+	35 - 40
4	8.7	N/A	PEDESTRIAN BRIDGE (OCEAN BAY DRIVE)	2030+	50 +

Figure 2 – Priority Ranking

*Card Sound Road Bridges – Joint rehabilitation project in 2016. Full repair project in 2025.

5.2 Project Grouping

Some of the recommended repair projects are somewhat small in scope or very similar in nature. By grouping smaller or similar projects together that are nearby, the County may realize a construction savings as mobilization per bridge site will be reduced and the total project cost will be larger, possibly attracting additional contractors resulting in more competitive bidding. Below are some recommended groupings for future projects:

Card Sound Bridges - Mosquito Creek (904984), Tubby's Creek (904982) and Steam Boat Creek (904980):

Three of the smaller bridges along Card Sound Road are exhibiting severe expansion joint deterioration. This is exposing the superstructure and substructure to water and debris from the road above. In an effort to preserve these heavily traveled bridges, it is recommended to begin an expansion joint rehabilitation project for the Mosquito Creek, Tubby's Creek and Steam Boat Creek Bridges in the near future. This can be a smaller repair project, independent from the full repair project, projected in 2025.

Duck Key Bridges – Truman Bridge (904602), Bimini Drive (904603), Harbor Drive (904604) and Seaview Drive (904606):

These Duck Key Bridges are ranked high in the priority rankings due to their age, deterioration and safety concerns. Replacing the structures would not only provide the community with a much needed safety improvement for pedestrians and oversized vehicles, but it would also provide new structures with a 75 year design life. However, replacing the bridges will be costly and it would first require the satisfaction of all of the NEPA requirements due to the historical significance of the bridges. The estimated construction date is set at 2020 to allow for the NEPA process, bridge replacement design and permitting.

A bridge repair project should be started soon if replacement is determined to not be a viable alternative at this time due to budget constraints. These bridges have been grouped together for a repair project due to their location, bridge type and similar repairs.

Key Largo Bridges – Bahama Road (904910), Ocean Bay Drive and Valois Boulevard (904908)

The repairs recommended for these bridges are fairly small in scale, but still needed to keep these small bridges in service. It is recommended to group these bridges together under one

construction project in an effort to attract additional interest from contractors. The repairs are similar and the bridge sites are within nine miles of each other.

Big Pine Key Bridges – Fern Avenue (904307) and Watson Boulevard (904305)

The repairs recommended for these two bridges are fairly small in scale, but still needed to keep these small bridges in service. It is recommended to group these bridges together under one construction project in an effort to attract additional interest from contractors. The bridges are similar, the repairs are similar and the bridge sites are approximately 700' from each other.

Appendix A: Duck Key Bridge Replacement

Duck Key Bridge Replacements

June 27, 2014

Monroe County

Kisinger Campo & Associates, Corp.

Duck Key Bridge Replacements

Bimini Drive Bridge

Truman Bridge

Existing Utilities – Bimini Drive

Overhead Electric

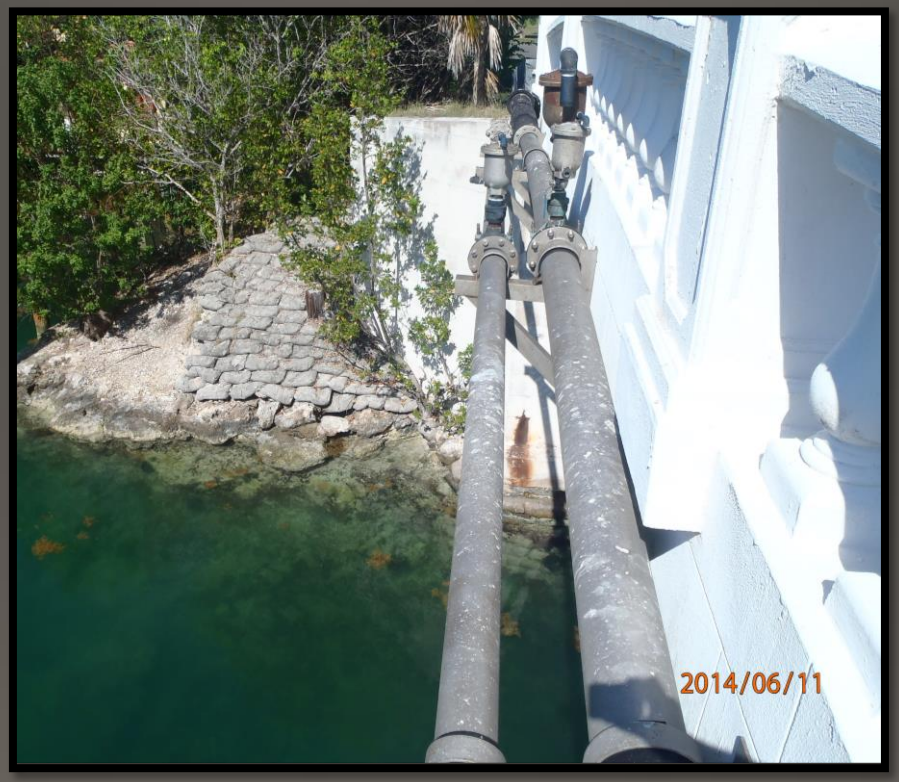

Bridge Mounted Utilities

Existing Utilities – Truman Bridge

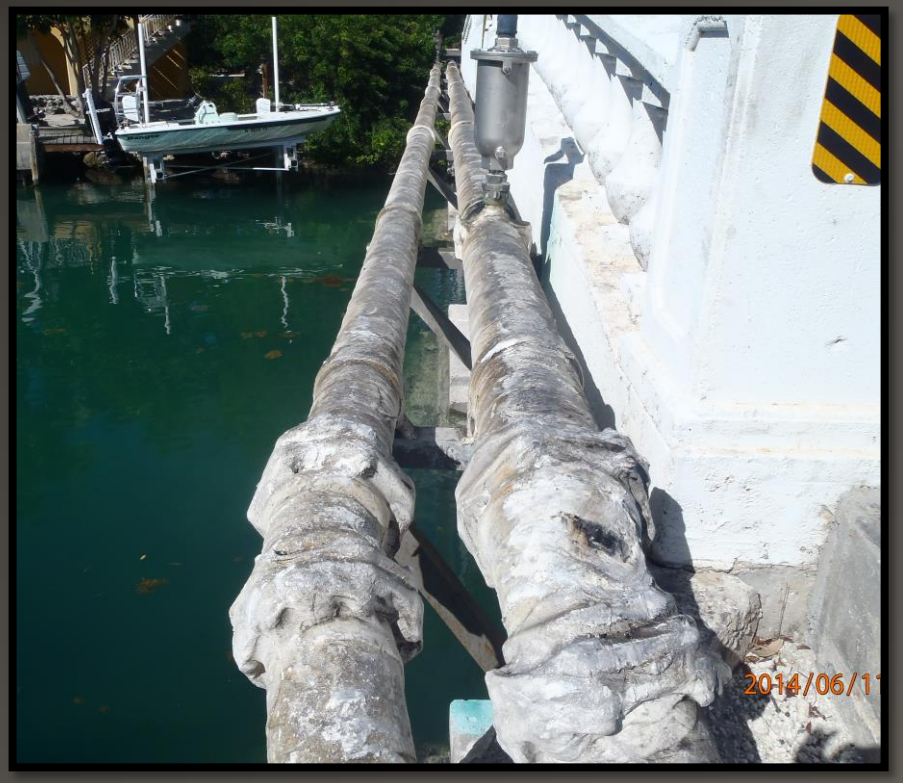

Bridge Mounted Utilities

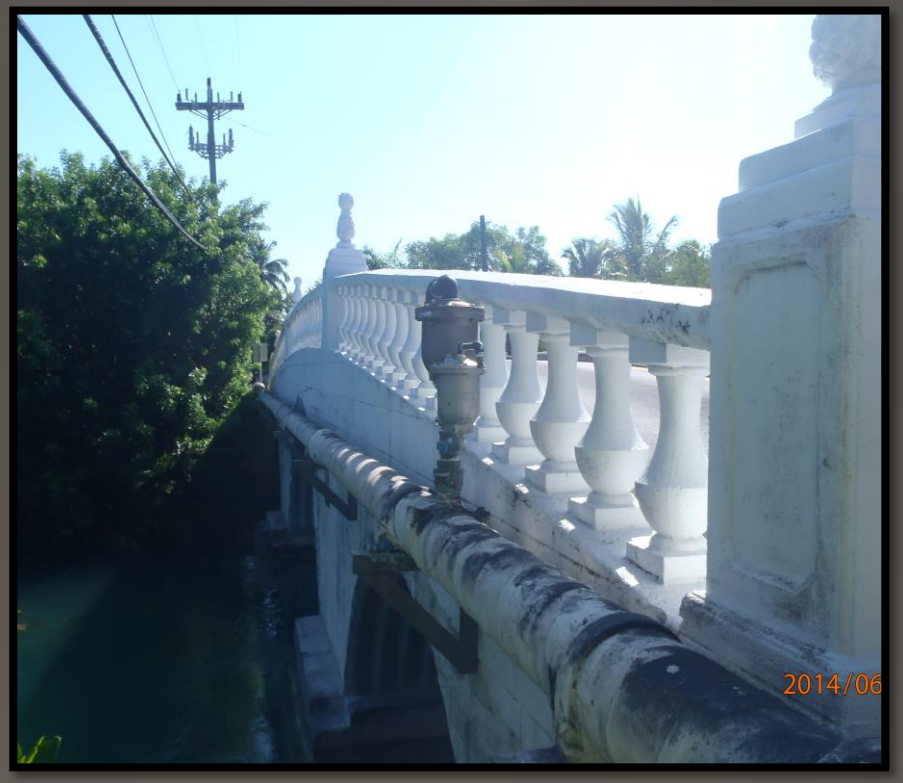

Overhead Electric and
Bridge Mounted Utilities

Right-of-way Encroachments

Residential Landscape in R/W

Boat in R/W

Aesthetics

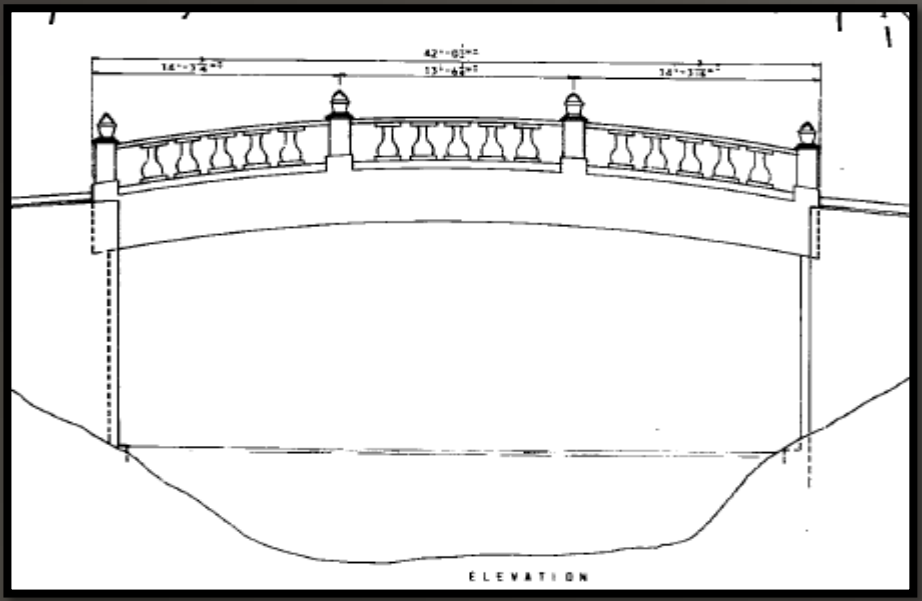

Bimini Drive Bridge – Low Arch

Decorative Railing

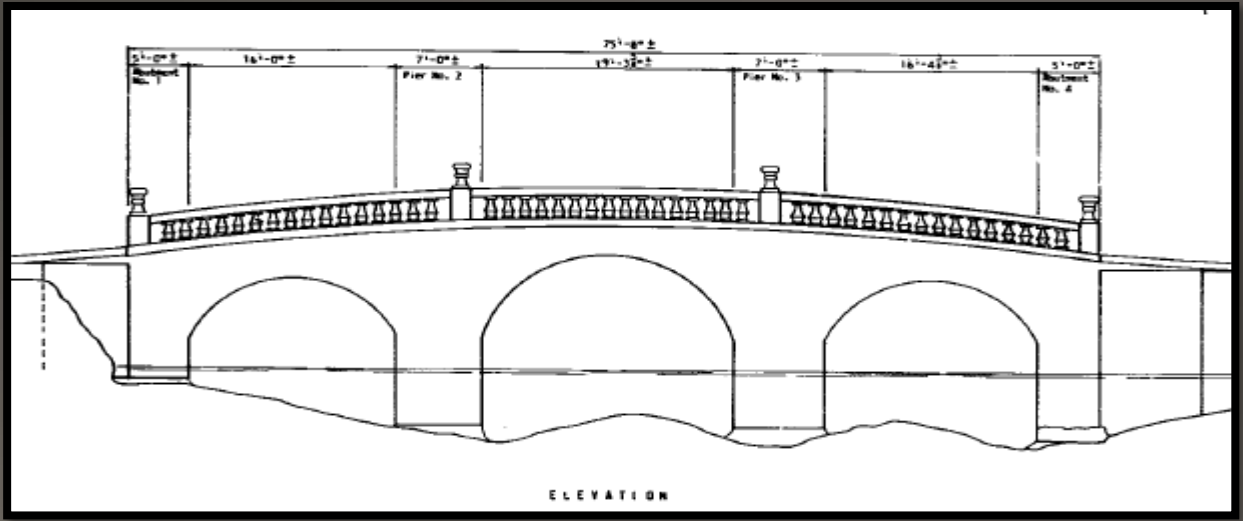

Truman Bridge – Triple Arch

Con/Span Replacement Option

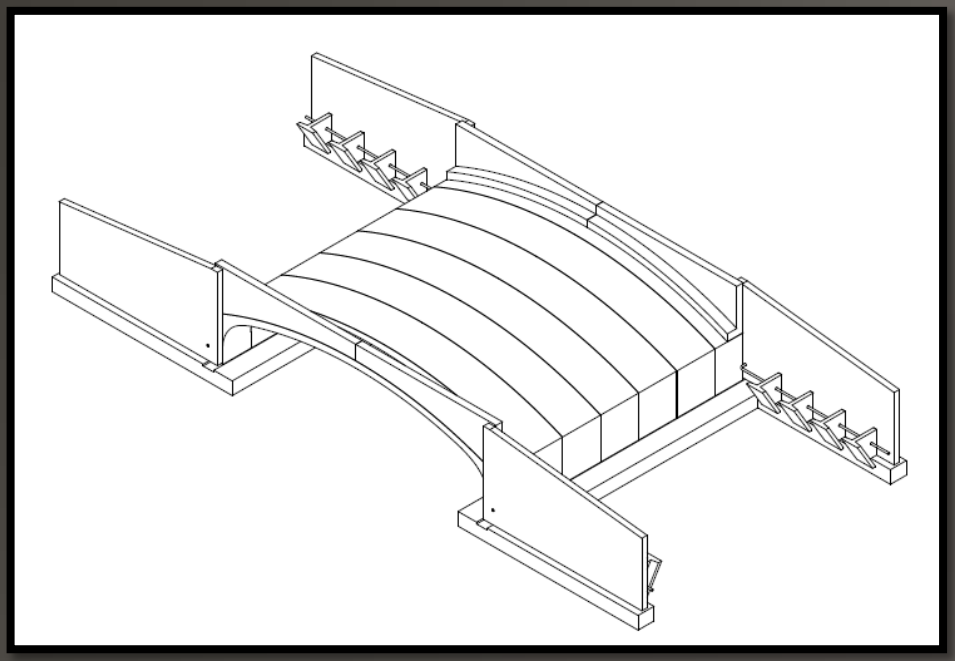

- Precast Elements
- Accelerates Construction
- Similar Arched Aesthetics

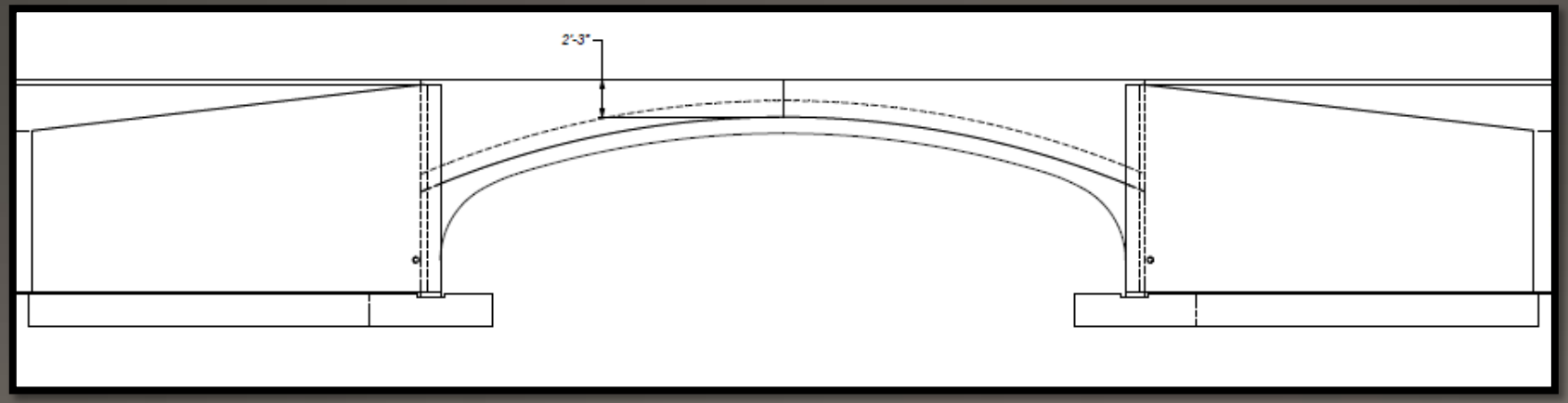

Bimini Drive Bridge

Con/Span Replacement Option

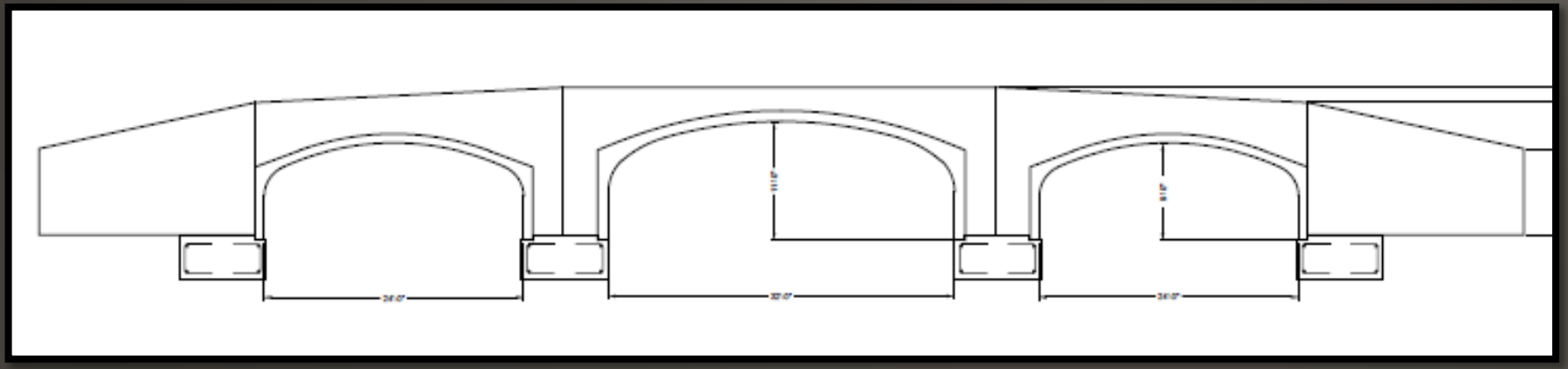

Truman Bridge

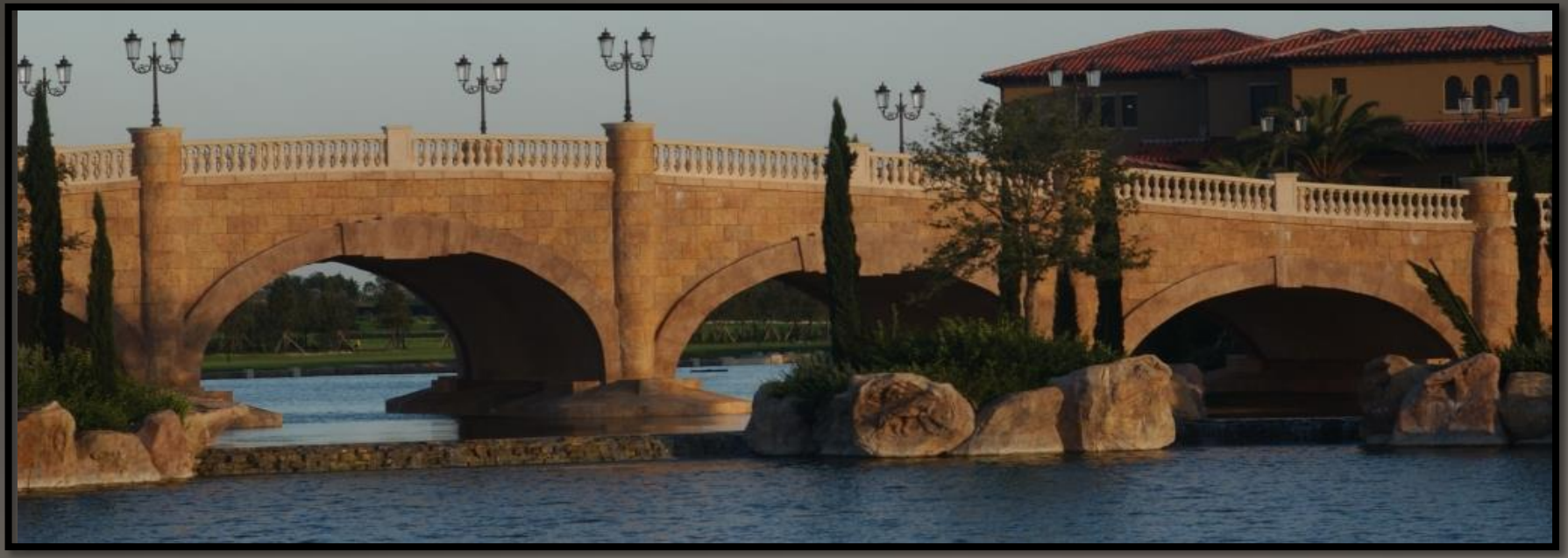

Wall Treatment/Decorative Railing Example

Con/Span Typical Section

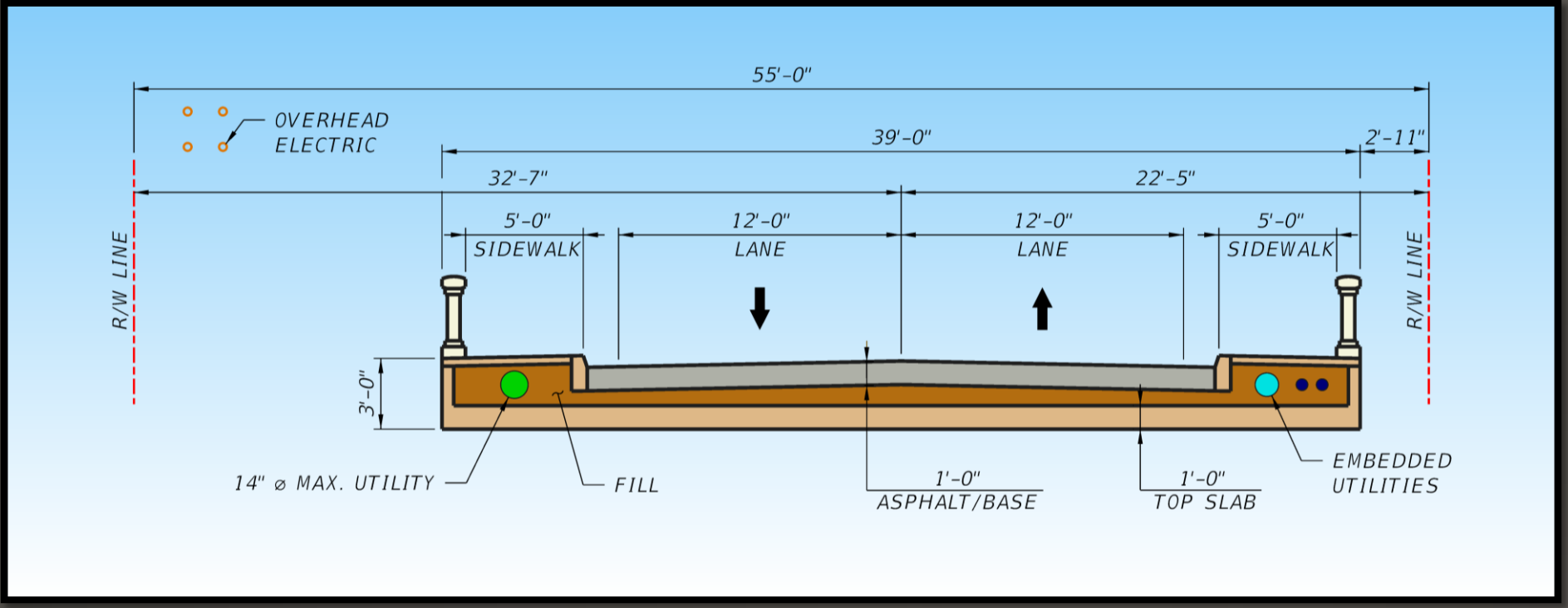

- **Fill between con/span top slab and asphalt/base**
- **Utilities hidden under raised concrete sidewalk**
- **Sidewalk also acts as utility shock pad**
- **Utilities can be accessed by removing sidewalk while both travel lanes remain open**

Florida-I Beam Replacement Option

- Decorative fascia to conceal modified Florida-I Beams
- Fascia can be shaped to resemble existing arch
- Add texture as desired for aesthetics

Florida-I Beam Typical Section

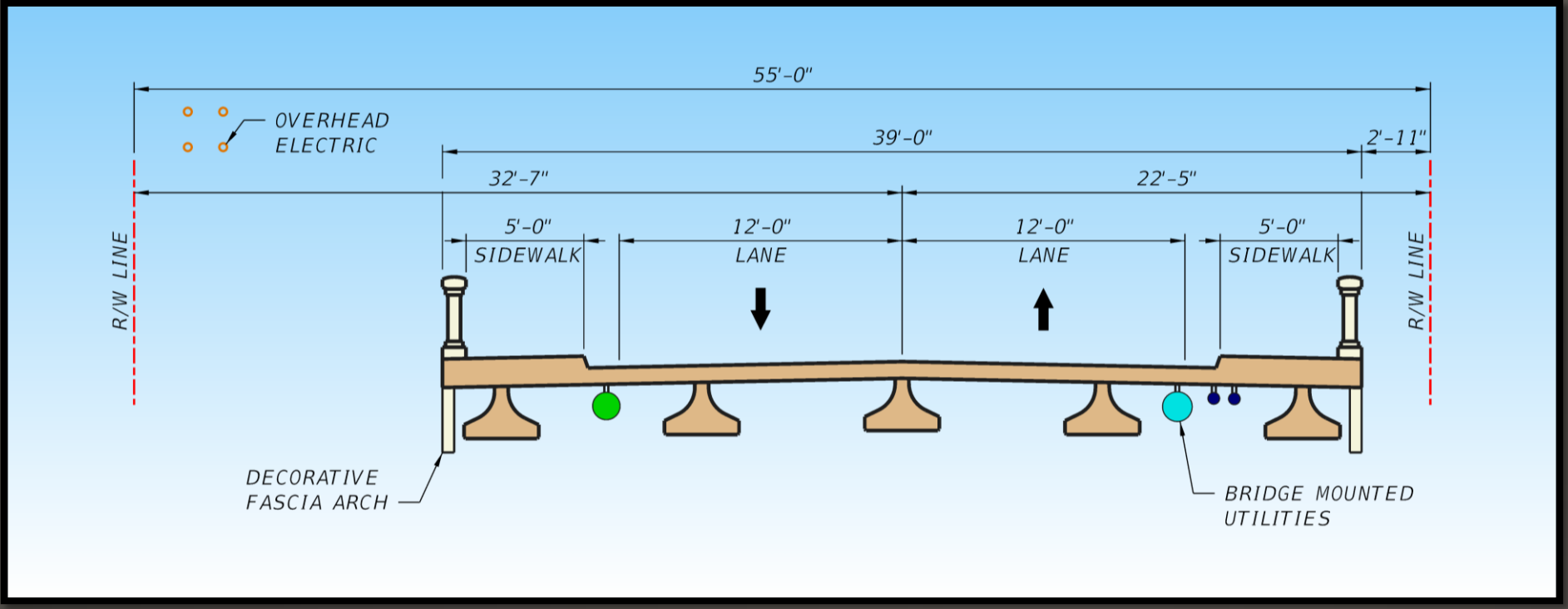

- **Use modified Florida-I Beams to match existing structure depth and profile**
- **Attach utilities to underside of deck**
- **Utilities accessible for maintenance**

Construction Sequence (Existing)

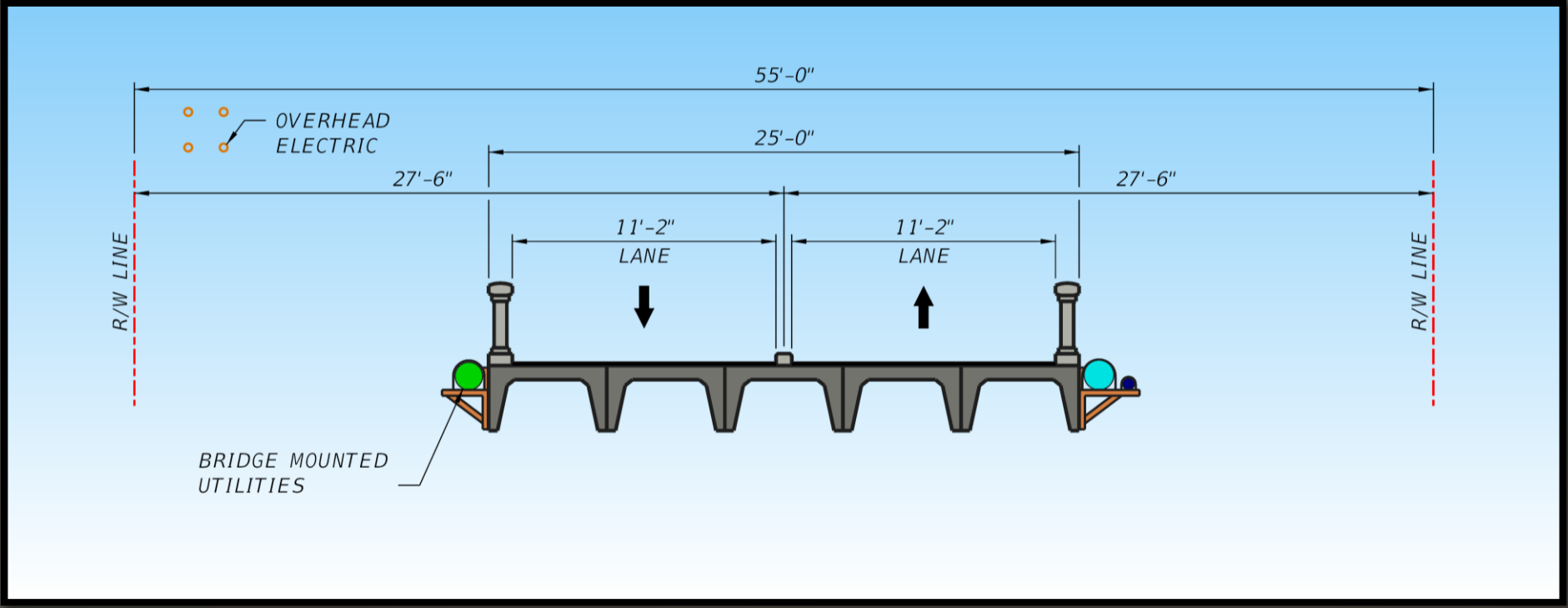

Existing Bimini Drive Bridge
(Truman Bridge Construction Sequence Similar)

Construction Sequence (1)

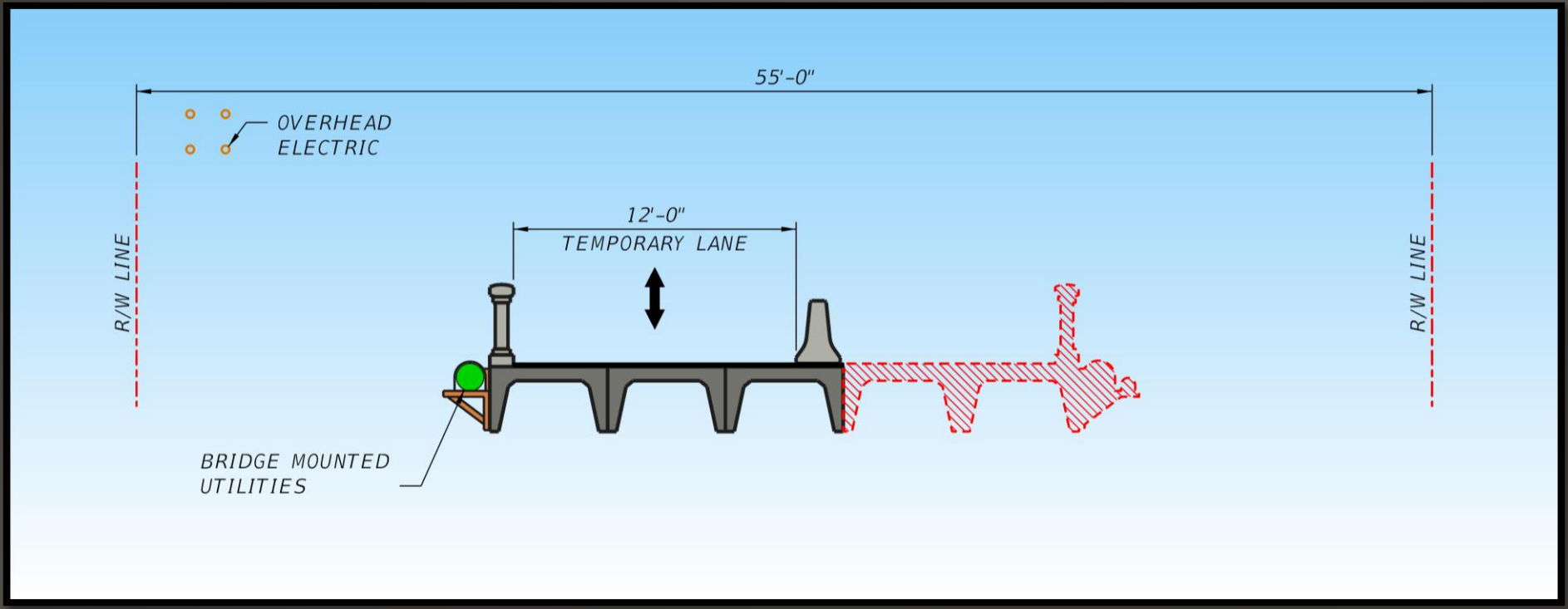

Phase 1

- **Reduce bridge to one lane with temporary traffic signal**
- **Demolish portion of existing bridge**

Construction Sequence (2)

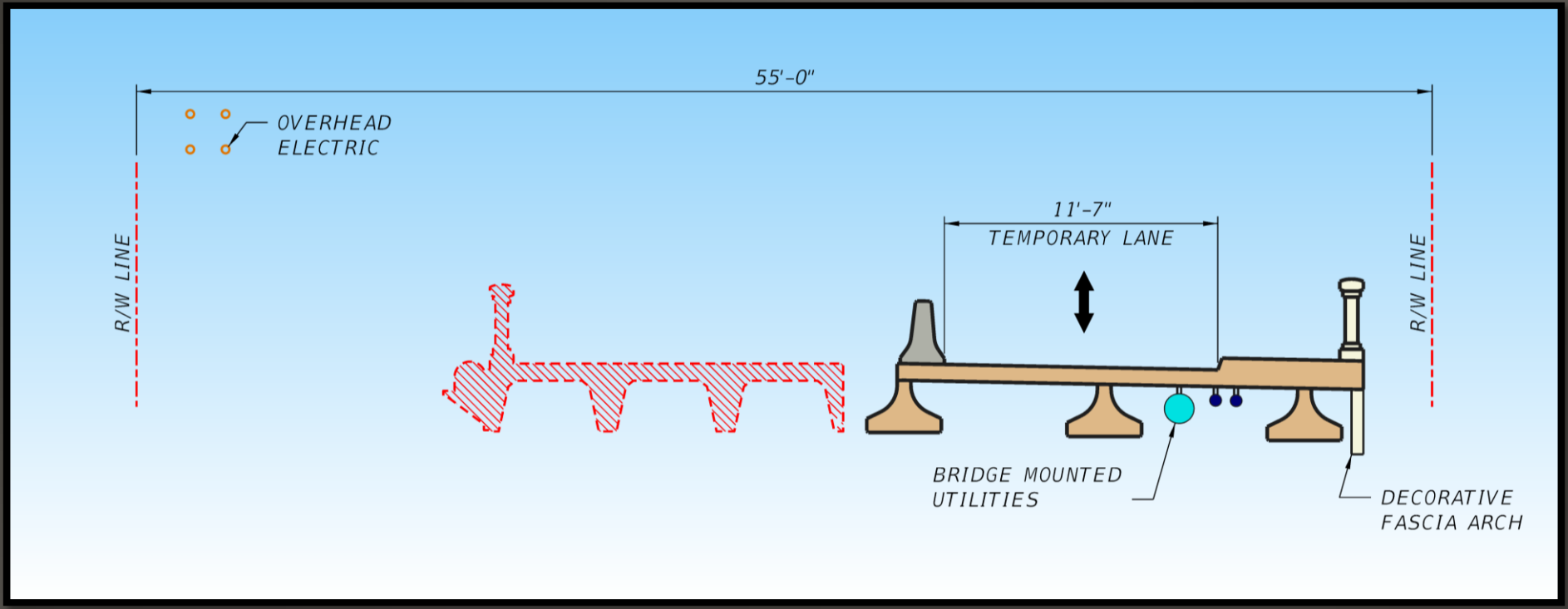

Phase 2

- **Construct half of the proposed bridge**
- **Shift single lane of traffic to new bridge**
- **Demolish remaining portion of existing bridge**

Construction Sequence (3)

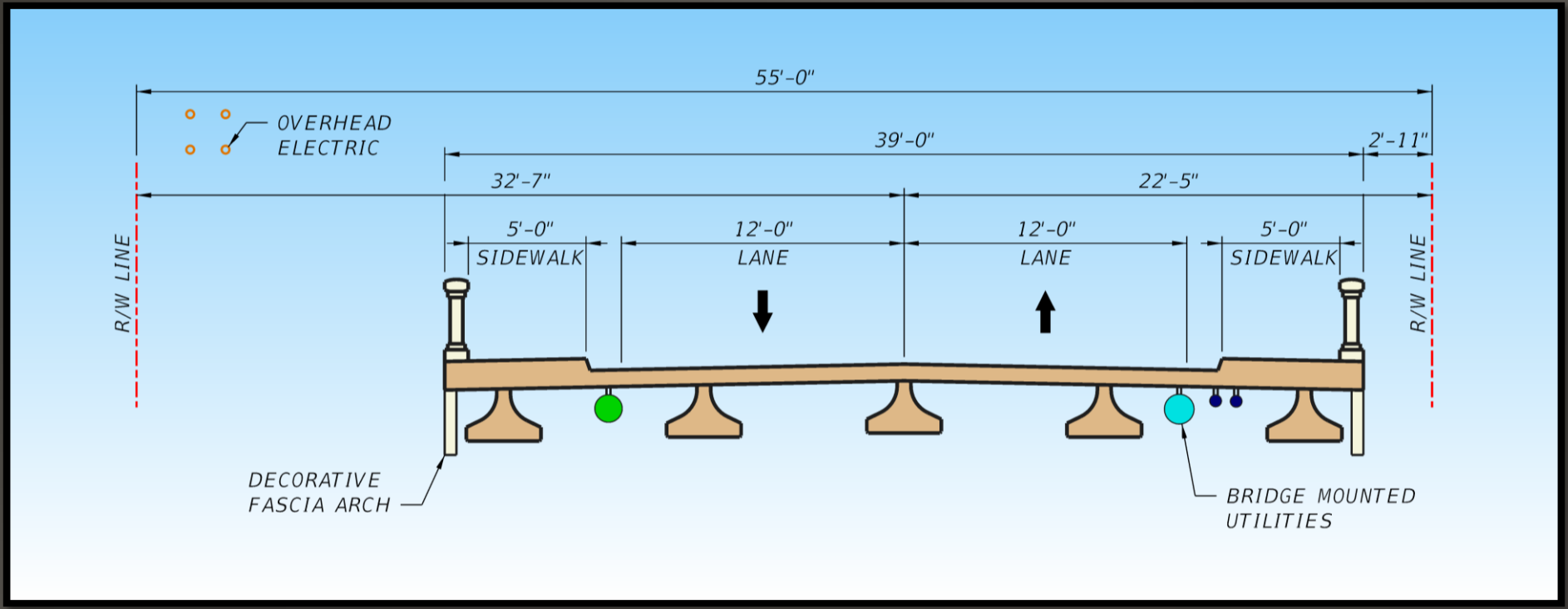

Phase 3 - Final

- **Complete construction of proposed bridge**
- **Shift traffic to final configuration**

Historic Significance & Permitting

FLORIDA DEPARTMENT OF TRANSPORTATION
ENVIRONMENTAL MANAGEMENT OFFICE

THE HISTORIC HIGHWAY BRIDGES OF FLORIDA

Prepared By:

Archaeological Consultants, Inc.
8110 Blaikie Court, Suite A
Sarasota, Florida 34240

December 2012

The Historic Highway Bridges of Florida

Ref. Pg.	County	FDOT Number	Bridge Name / Location	Year Built/ Recon.	Material-Bridge Type	FMSF Number	NRHP Status
LEGEND: C - Concrete; CC - Continuous Concrete; CG - Continuous Steel; PSC - Prestressed Concrete; S - Steel; T – Timber * Overseas Highway NRHP Status: L – Listed; EL – Eligible; PE – Potentially Eligible; RE – Recommended Eligible							
6-18	Monroe	900080*	Rockland Channel	1911/1979	C - Arch Deck	8MO1490	L: 2004
6-18	Monroe	900081*	Shark Channel Bridge	1911/1979	C - Arch Deck	8MO1489	L: 2004
6-18	Monroe	900090*	Saddlebunch #5 Bridge	1943/1980	C - Arch Deck	8MO3953	L: 2004
6-18	Monroe	900091*	Saddlebunch #4 Bridge	1943/1980	C - Arch Deck	8MO3954	L: 2004
6-18	Monroe	900092*	Saddlebunch #3 Bridge	1943/1981	C - Arch Deck	8MO3955	L: 2004
6-18	Monroe	900093	Saddlebunch #2 Bridge	1943/1981	C - Arch Deck	8MO3956	L: 2004
6-18	Monroe	900094*	Long Key Viaduct	1906/1981	C - Arch Deck	8MO1229	L: 1979
6-18	Monroe	900097*	Channel Two Viaduct	1909/1981	C - Arch Deck	8MO3476	L: 2004
6-18	Monroe	900098*	Channel #5 Bridge	1909/1982	C - Arch Deck	8MO3968	L: 2004
6-18	Monroe	900099*	Tom's Harbor Cut Bridge	1909/1980	C - Arch Deck	8MO3967	L: 2004
6-18	Monroe	900100*	Tom's Harbor Channel Bridge	1909/1980	C - Arch Deck	8MO3966	L: 2004
6-18	Monroe	900101*	Knight Key Bridge/ Seven Mile Bridge	1909/1982	C - Arch Deck	8MO1230	L: 1979
6-18	Monroe	900102*	Lower Sugarloaf Channel Bridge	1943/1981	C - Arch Deck	8MO3957	L: 2004
6-18	Monroe	900103*	Little Duck-Missouri Channel Bridge	1943/1981	C - Arch Deck	8MO3965	L: 2004
6-18	Monroe	900104*	Ohio-Missouri Channel Bridge	1943/1981	C - Arch Deck	8MO3964	L: 2004
6-18	Monroe	900105*	Ohio-Bahia Honda Bridge	1943/1981	C - Arch Deck	8MO3963	L: 2004
6-18	Monroe	900106*	Spanish Harbor Channel Bridge	1912/1982	C - Arch Deck	8MO1484	L: 2004
6-18	Monroe	900111*	South Pine Channel Bridge	1943/1982	C - Arch Deck	8MO3962	L: 2004
6-18	Monroe	900112*	Park Channel Bridge	1943/1982	C - Arch Deck	8MO3958	L: 2004
6-18	Monroe	900115*	Bow Channel Bridge	1943/1982	C - Arch Deck	8MO3959	L: 2004
6-18	Monroe	900116*	Kemp Channel Bridge	1943/1982	C - Arch Deck	8MO3960	L: 2004
6-18	Monroe	900117*	Niles Channel Bridge	1943/1983	C - Arch Deck	8MO3961	L: 2004
6-3	Monroe	904602	Truman Bridge / Duck Key Drive over Unnamed Channel	1955/1982	C - Arch Deck	8MO2137	EL: 2000
6-3	Monroe	904603	Bimini Drive / Sam's Canal	1955/1982	PSC - Channel Beam	8MO2136	EL: 2000
6-3	Monroe	904604	Harbour Drive / Joe's Canal	1955/1982	PSC - Channel Beam	8MO2135	EL: 2000
6-3	Monroe	904606	Rosen Bridge / Seaview Drive over Unnamed Canal	1955/1982	PSC - Channel Beam	8MO2138	EL: 2000
FDOT DISTRICT 7							
	Hernando	080001	Brooksville Overpass/US-41 (SR-45)/CSX RR	1936	S: Girder	8HE389	RE: 2010
	Hillsborough	100069	James N. Holmes Bridge / Florida Avenue (US-41B) / Hillsborough River	1926	C - Tee-Beam	8HI6668	EL: 2000
5-57	Hillsborough	100100	Kennedy Boulevard (SR-60) / Hillsborough River	1913/1995	S - Bascule	8HI640	P-EL: 1987
5-38	Hillsborough	100920	Hillsborough River Lift Bridge / Hillsborough Avenue (US-92 EB) / Hillsborough River	1939/1999	S - Lift	8HI6669	EL: 2000
5-58	Hillsborough	105500	Platt Street / Hillsborough River	1926	S - Bascule	8HI862	P-EL: 2005
5-61	Hillsborough	105501	Brorein Street / Hillsborough River	1959	S - Bascule	8HI11540	P-EL: 2009
5-59	Hillsborough	105502	Cass Street / Hillsborough River	1927/1949	S - Bascule	8HI6670	P-EL: 2002
5-60	Hillsborough	105503	Laurel Street / Hillsborough River	1927/1969	S - Bascule	8HI6671	EL: 2000
5-47	Hillsborough	105504	Michigan Ave. Swing Bridge/Columbus Drive Swing Bridge / Hillsborough River	1926/2012	S - Swing	8HI6672	EL: 2000

Chapter 4 – Survey Results 4-7

ACI Historic Bridge Report

Appendix B: Cost Estimates

Bridge Assessment Report
Monroe County
Appendix B – Cost Estimates

Table of Contents

1.0 Garrison Bight (904025)
- 1.1 Repair Cost Estimate (904025)
- 1.2 Replacement Cost Estimate (904025)

2.0 Geiger Key (904110)
- 2.1 Repair Cost Estimate (904110)
- 2.2 Replacement Cost Estimate (904110)

3.0 Similar Sound (904120)
- 3.1 Repair Cost Estimate (904120)
- 3.2 Replacement Cost Estimate (904120)

4.0 Bay Point (904140)
- 4.1 Repair Cost Estimate (904140)
- 4.2 Replacement Cost Estimate (904140)

5.0 Shore Drive (904152)
- 5.1 Repair Cost Estimate (904152)
- 5.2 Replacement Cost Estimate (904152)

6.0 Sugarloaf Boulevard (904153)
- 6.1 Repair Cost Estimate (904153)
- 6.2 Replacement Cost Estimate (904153)

7.0 Sugarloaf Creek (904155)
- 7.1 Repair Cost Estimate (904155)
- 7.2 Replacement Cost Estimate (904155)

8.0 Old S.R. 4A (CR 939) (904160)
- 8.1 Repair Cost Estimate (904160)
- 8.2 Replacement Cost Estimate (904160)

Bridge Assessment Report
Monroe County
Appendix B – Cost Estimates

9.0 Caribbean Drive (904250)
- 9.1 Repair Cost Estimate (904250)
- 9.2 Replacement Cost Estimate (904250)

10.0 Watson Boulevard (904305)
- 10.1 Repair Cost Estimate (904305)
- 10.2 Replacement Cost Estimate (904305)

11.0 Fern Avenue (904307)
- 11.1 Repair Cost Estimate (904307)
- 11.2 Replacement Cost Estimate (904307)

12.0 S.R. 940 – Leg A (Watson Boulevard) (904310)
- 12.1 Repair Cost Estimate (904310)
- 12.2 Replacement Cost Estimate (904310)

13.0 No Name Key (904320)
- 13.1 Repair Cost Estimate (904320)
- 13.2 Replacement Cost Estimate (904320)

14.0 Tom's Harbor Channel (904600)
- 14.1 Repair Cost Estimate (904600)
- 14.2 Replacement Cost Estimate (904600)

15.0 Truman Bridge (904602)
- 15.1 Repair Cost Estimate (904602)
- 15.2 Widening Cost Estimate (904602)
- 15.3 Replacement Cost Estimate (904602)

16.0 Bimini Drive (904603)
- 16.1 Repair Cost Estimate (904603)
- 16.2 Widening Cost Estimate (904603)
- 16.3 Replacement Cost Estimate (904603)

Bridge Assessment Report
Monroe County
Appendix B – Cost Estimates

17.0 Harbor Drive (904604)
- 17.1 Repair Cost Estimate (904604)
- 17.2 Widening Cost Estimate (904604)
- 17.3 Replacement Cost Estimate (904604)

18.0 Seaview Drive (904606)
- 18.1 Repair Cost Estimate (904606)
- 18.2 Widening Cost Estimate (904606)
- 18.3 Replacement Cost Estimate (904606)

19.0 Valois Boulevard (904908)
- 19.1 Repair Cost Estimate (904908)
- 19.2 Replacement Cost Estimate (904908)

20.0 Bahama Road (904910)
- 20.1 Repair Cost Estimate (904910)
- 20.2 Replacement Cost Estimate (904910)

21.0 Steam Boat Creek (904980)
- 21.1 Repair Cost Estimate (904980)
- 21.2 Replacement Cost Estimate (904980)

22.0 Tubby's Creek (904982)
- 22.1 Repair Cost Estimate (904982)
- 22.2 Replacement Cost Estimate (904982)

23.0 Mosquito Creek (904984)
- 23.1 Repair Cost Estimate (904984)
- 23.2 Replacement Cost Estimate (904984)

24.0 Saunder's Creek (904986)
- 24.1 Repair Cost Estimate (904986)
- 24.2 Replacement Cost Estimate (904986)

Bridge Assessment Report
Monroe County
Appendix B – Cost Estimates

25.0 Card Sound Bridge (904990)
- 25.1 Repair Cost Estimate (904990)
- 25.2 Replacement Cost Estimate (904990)

26.0 Ocean Bay Drive
- 26.1 Repair Cost Estimate (Ocean Bay Drive)
- 26.2 Replacement Cost Estimate (Ocean Bay Drive)

27.0 Pedestrian Bridge (Ocean Bay Drive)
- 27.1 Repair Cost Estimate (Pedestrian Bridge)

28.0 Miscellaneous Calculations

1.0 Garrison Bight (904025)

1.1 Repair Cost Estimate (904025)

CONSTRUCTION COST ESTIMATE

for

GARRISON BIGHT BRIDGE REPAIR

Bridge #904025

MONROE COUNTY, FLORIDA

Item Number	Item Description and		Estimated Quantity	Unit	Unit Price	Total Amount Per Item
GARRISON BIGHT #904025						
101- 1	MOBILIZATION	15%	1 *	LS		$110,064.64 *
102- 1	MAINTENANCE OF TRAFFIC (# DAYS)	15%	1 *	LS		$95,204.89 *
104- 11	FLOATING TURBIDITY BARRIER		1160 *	LF	$15.00 *	$17,400.00 *
339- 1	MISCELLANEOUS ASPHALT PAVEMENT		1 *	TN	$241.58 *	$128.84 *
401- 70- 3	RESTORE SPALLED AREAS, LATEX MODIFIED MORTAR, ACRYLIC		329.2 *	CF	$558.33 *	$183,802.24 *
411- 1	EPOXY MATERIAL FOR CRACK INJECTION-STRUCTURES REHAB		30 *	GA	$145.00 *	$4,350.00 *
411- 1	(ASPHALT) EPOXY MATERIAL FOR CRACK INJECTION-STRUCTURES REHAB		6 *	GA	$145.00 *	$906.25 *
411- 2	CRACKS INJECT & SEAL-STRUCTURES REHAB		233 *	LF	$80.00 *	$18,640.00 *
411- 2	(ASPHALT) CRACKS INJECT & SEAL-STRUCTURES REHAB		51 *	LF	$80.00 *	$4,080.00 *
413-151	METHACRYLATE MONOMER		73 *	GA	$123.00 *	$8,926.11 *
413-154	CLEANING AND SEALING CONCRETE SURFACES: PENETRANT SEALER OR METHACRYLATES		7257.0 *	SF	$0.98 *	$7,111.86 *
415- 1- 4	REINFORCING STEEL-SUPERSTRUCTURE		648 *	LB	$1.50 *	$972.00 *
415- 1- 5	REINFORCING STEEL-SUBSTRUCTURE		1328 *	LB	$1.50 *	$1,992.00 *
455- 76	WRAP PILE CLUSTERS		20 *	EA	$1,500.00 *	$30,000.00 *
457- 2-221	CATHODIC PROTECTION INTEGRAL PILE JACKET, STRUCTURAL, 16.1" TO 30.0", GALVANIC SYSTEM		80 *	LF	$2,500.00 *	$200,000.00 *
458- 1- 21	BRIDGE DECK EXPANSION JOINT, REHABILITATION, POURED JOINT WITH BACKER ROD		163 *	LF	$120.00 *	$19,560.00 *
460- 1- 13	STRUCTURAL STEEL REHAB-BOLT, NUT, WASH & PLT		298 *	LB	$150.00 *	$44,640.00 *
470- 1	TREATED TIMBER, STRUCTURAL		0.9 *	MB	$10,500.00 *	$9,170.00 *
510- 1	NAVIGATION LIGHTS - FIXED BRIDGE		1.0 *	LS	$74,069.99 *	$74,069.99 *
530- 1	RIPRAP, SAND-CEMENT		1.0 *	CY	$650.00 *	$650.00 *
561- 1	COATING EXISTING STRUCTURAL STEEL		1 *	LS	1 Total @ $2000/T *	$1,800.00 *
630-2-15	CONDUIT, FURNISH & INSTALL, BRIDGE MOUNT		260 *	LF	$25.00 *	$6,500.00 *
	APPROACH ROAD WORK (SEE ATTACHED COST ESTIMATE FOR RESURFACING)					$99,065.00 *
					CONTINGENCIES 20%	$187,806.77 *
					TOTAL	$1,126,840.59 *

* Pay Item 561- 1 includes the cost of painting the all prestressed beam steel bearing assemblies.

V. JLL 7/14

ENGINEER'S ESTIMATE

FINANCIAL PROJECT ID # :	
PROJECT DESCRIPTION:	Palm Avenue Causeway, Key West
PAY ITEM SPEC YEAR:	2014
SUBMITTAL TYPE:	Completed Plans to District Specs
COUNTY:	Monroe
DATE:	June 5, 2014
ENGINEERING CONSULTANT FIRM:	Kisinger Campo & Associates
CONTACT NAME:	Richard Harrison, P.E.
PHONE NUMBER:	(813) 871-5331
FILE VERSION:	EE_02-14_Rev20
PAGE NUMBER:	1 of 2

COMPONENT GROUPS

100 - STRUCTURES	*NOT USED*		
200 - ROADWAY			$77,741.40
300 - SIGNING & PAVEMENT MARKINGS			$2,235.96
400 - LIGHTING	*NOT USED*		
500 - SIGNALIZATION	*NOT USED*		
550 - ITS	*NOT USED*		
600 - LANDSCAPE / PERIPHERALS	*NOT USED*		
700 - UTILITIES	*NOT USED*		
800 - ARCHITECTURAL	*NOT USED*		
900 - MASS TRANSIT	*NOT USED*		
1000 - INVALID & OTHER ITEMS	*NOT USED*		
	COMPONENT SUB-TOTAL		$79,977.36
(102-1) MOT (Maintenance of Traffic)		5%	$3,998.87
	SUB-TOTAL		$83,976.23
(101-1) MOB (Mobilization)		7%	$5,878.34
	SUB-TOTAL		$89,854.56
PU (Project Unknowns)		5%	$4,492.73
	SUB-TOTAL		$94,347.29
(999-25) Initial Contingency (Do Not Bid)			$4,717.36
	PROJECT GRAND TOTAL		**$99,064.66**

NOTES:

ENGINEER'S ESTIMATE

FINANCIAL PROJECT ID:	
FILE VERSION:	EE_02-14_Rev20
PAGE NUMBER:	

200-Roadway

PAY ITEM #	ITEM DESCRIPTION	UNIT	QUANTITY	UNIT COST	TOTAL COST
0101 1	MOBILIZATION	LS	7%	See Summary Sheet	
0102 1	MAINTENANCE OF TRAFFIC	LS	5%	See Summary Sheet	
0999 25	INITIAL CONTINGENCY AMOUNT, DO NOT BID	LS		$4,717.36	
0327 70 4	MILLING EXIST ASPH PAVT, 3" AVG DEPTH	SY	2667	$5.00	$13,335.00
0334 1 23	SUPERPAVE ASPH CONC, TRAFFIC C, PG76-22, PMA	TN	220	$110.00	$24,200.00
0337 7 43	ASPHALT CONCRETE FRICTION COURSE,TRAFFIC C, FC-12.5,	TN	220	$180.00	$39,600.00
0710 11211	PAINTED PAVEMENT MARKINGS, STANDARD, YELLOW, SOLID, 6"	NM	0.758	$800.00	$606.40
200-Roadway		**COMPONENT TOTAL**			**$77,741.40**

ENGINEER'S ESTIMATE

FINANCIAL PROJECT ID:	
FILE VERSION:	EE_02-14_Rev20
PAGE NUMBER:	2 of 2

300-Signing & Pavement Markings

PAY ITEM #	ITEM DESCRIPTION	UNIT	QUANTITY	UNIT COST	TOTAL COST
0706 3	RETRO-REFLECTIVE PAVEMENT MARKERS	EA	50	$5.00	$250.00
0711 16211	THERMOPLASTIC, STANDARD-OTHER SURFACES,	NM	0.379	$5,240.00	$1,985.96
300-Signing & Pavement Markings		**COMPONENT TOTAL**			**$2,235.96**

Kisinger Campo & Associates, Corp.

Allen Kisinger 1904-1981 engineering • inspection • planning

Project : Garrison Bight Bridge Repair
Subject : Estimated Quantities

Calcs : JWG **Date :** 05/14
Check : JLL **Date :** 7/14

104- 11 FLOATING TURBIDITY BARRIER

Main Channel Bents w/ Fender System

	Length (ft)	Width (ft)	Perimeter (ft)
Perimeter around fender	120	5	
5 ft working zone around fender	5	5	
Total barrier needed	130	15	290.00
Number of bents			2
Layers of barrier around work area (double)			2

LENGTH: 1160 LF

TOTAL LENGTH: 1160 LF

339- 1 MISCELLANEOUS ASPHALT PAVEMENT

	Weight (TN)
Settlement	0.5
	0.5

TOTAL WEIGHT: 0.5 TN

401- 70- 3 RESTORE SPALLED AREAS, LATEX MODIFIED MORTAR- ACRYLIC

	Volume (cf)	
Railing	26.4	
Concrete Deck	26.6	
Beams & Diaphragms	55.0	CONS.
Prestressed Piles	210.8	INCL. WALLS
Bent Caps	7.2	
Abutments	3.2	
	329.2	

TOTAL VOLUME: 329.2 CF

411- 1 EPOXY MATERIAL FOR CRACK INJECTION-STRUCTURES REHAB

	Volume (Gal)
Railing	3.8
Concrete Deck	26.3
Beams & Diaphragms	0.0
Prestressed Piles	0.0
Bent Caps	0.0
Abutments	0.0
	30.0

TOTAL VOLUME: 30 GA

Kisinger Campo & Associates, Corp.

Allen Kisinger 1904-1981 engineering • inspection • planning

Project : Garrison Bight Bridge Repair
Subject : Estimated Quantities

Calcs : JWG **Date :** 05/14
Check : JLL **Date :** 7/14

411- 1 (ASPHALT) EPOXY MATERIAL FOR CRACK INJECTION-STRUCTURES REHAB

	Volume (Gal)
Asphalt	6.3
	6.3

TOTAL VOLUME: 6 GA

411- 2 CRACKS INJECT & SEAL-STRUCTURES REHAB

	Length (LF)
Railing	30.0
Concrete Deck	203.0
Beams & Diaphragms	0.0
Prestressed Piles	0.0
Bent Caps	0.0
Abutments	0.0
	233.0

TOTAL LENGTH: 233 LF

411- 2 (ASPHALT) CRACKS INJECT & SEAL-STRUCTURES REHAB

	Length (LF)
Asphalt	51.0
	51.0

TOTAL LENGTH: 51 LF

413-151 METHACRYLATE MONOMER

Location	Width (ft)	Span (ft)	Surface area (SF)
Existing Deck	41.00	177.00	7257.0
			7257.0

	Volume (GA)
100 SF / GA	**72.6**

TOTAL AREA: 73 GA

Kisinger Campo & Associates, Corp.

Allen Kisinger 1904-1981 engineering • inspection • planning

Project : Garrison Bight Bridge Repair
Subject : Estimated Quantities

Calcs : JWG **Date :** 05/14
Check : JLL **Date :** 7/14

413-154 CLEANING AND SEALING CONCRETE SURFACES: PENETRANT SEALER OR

Location	Width (ft)	Span (ft)	Surface area (SF)
Existing Deck	41.00	177.00	7257.0
			7257.0

TOTAL AREA: 7,257.0 SF

415- 1- 4 REINFORCING STEEL-SUPERSTRUCTURE

	Volume concrete (cf)	Steel density* (lb/cf)	Steel (lb)
Reinforcing steel	108.0	6	648.0

TOTAL WEIGHT: 648 LB

*Based on similar estimates

415- 1- 5 REINFORCING STEEL-SUBSTRUCTURE

	Volume concrete (cf)	Steel density* (lb/cf)	Steel (lb)
Reinforcing steel from spall repair	221.2	6	1327.2
			1327.2

TOTAL WEIGHT: 1328 LB

*Based on similar estimates

455- 76 WRAP PILE CLUSTERS

	Quantity
Assume 20 locations will need to be replaced	20

TOTAL QUANTITY: 20 EA

Kisinger Campo & Associates, Corp.

Allen Kisinger 1904-1981 engineering • inspection • planning

Project : Garrison Bight Bridge Repair
Subject : Estimated Quantities

Calcs : JWG **Date :** 05/14
Check : JLL **Date :** 7/14

457- 2-221 CATHODIC PROTECTION INTEGRAL PILE JACKET, STRUCTURAL, 16.1" TO 30.0", GALVANIC

Bent	Pile	Use (ft)
2	2	20.00
2	5	20.00
3	4	20.00
3	5	20.00
		80

TOTAL LENGTH: 80 LF

458- 1- 21 BRIDGE DECK EXPANSION JOINT, REHABILITATION,

	Number of spans	Width of bridge (ft)	Total length (ft)
Spans 1-3	4	40.750	163.000

TOTAL LENGTH: 163 LF

460- 1- 13 STRUCTURAL STEEL REHAB-BOLT, NUT, WASH & PLT

*Bolts are 7/8in diameter. Assume 20% need to be replaced.

Type	Number per Fender	Number of Bolts per Cluster	Length (in)	Weight (lb/ft)*	Total Weight (lb)*
2-Pile Cluster	16	6	30	2.5	595.2
3-Pile Cluster	6	6	20	2.5	148.8
					744.0
Number of Fenders					2
Percent to Replace					20.00%

TOTAL WEIGHT: 298 LB

470- 1 TREATED TIMBER, STRCUTURAL

Type	FBM per Board	Boards	Total FBM*
Fender Deck	0.333	100	33.3
Whalers	12.000	20	240.0
Clearance Marker Supports	60	10	600.0
			873.3

TOTAL WEIGHT: 0.9 MB

Kisinger Campo & Associates, Corp.

Allen Kisinger 1904-1981 engineering • inspection • planning

Project : Garrison Bight Bridge Repair
Subject : Estimated Quantities

Calcs : JWG **Date :** 05/14
Check : JLL **Date :** 7/14

510- 1 NAVIGATION LIGHTS - FIXED BRIDGE

Location	Number of lights
Fender System	6
On Girders	2
	8

TOTAL LIGHTS: 8 EA
LUMP SUM: 1 LS

530- 1 RIPRAP, SAND-CEMENT

Location	Height (ft)	Length (ft)	Depth (ft)	Total Volume (CY)
Under Northwest Seawall	2.00	4	2.0	16.0
				0.6

TOTAL VOLUME: 1 CY

561- 1 COATING EXISTING STRUCTURAL STEEL

*Total weight estimated by images

	Number	Weight of Plate (lb)	Total Weight (lb)
Structural Steel (Bearing Sole Plates)	36	50.0	1800.0
			0.9

TOTAL WEIGHT: 1 TN

630-2-15 CONDUIT, FURNISH & INSTALL, BRIDGE MOUNT

*Total length taken from existing bridge plans.

	Total Length (LF)
West Side - Span 2	60.0
South Fender - Pile 3-5	100.0
South Fender - Southeast Lights	100.0
	260.0

TOTAL WEIGHT: 260 LF

1.2 Replacement Cost Estimate (904025)

CONSTRUCTION COST ESTIMATE

for

GARRISON BIGHT BRIDGE REPLACEMENT

Bridge #904025

MONROE COUNTY, FLORIDA

Replacement Cost is based on FDOT Historical Bridge Cost per square foot

GARRISON BIGHT #904025

Use cost for medium simple span Florida I-Beam Bridge		$145.00
Increase by 3% due to construction over open water	3%	4.35
Increase by 20% due to phased construction	20%	$29.00
Increase by 75% due to work in Monroe County (FIB Construction)	75%	$108.75
	Cost per Square Foot	$287.10

Bridge Length (ft)	177.40
Bridge Width (ft)	40.75
Deck Area (sf)	7229
Bridge Cost	$2,075,460.26
Approach Slab and Approach Roadway	$300,000.00
Complex Traffic Control with Detours	$200,000.00
Non-Composite Fender System	$600,000.00
TOTAL	$3,175,460.26

V: JLL 7/14

2.0 Geiger Key (904110)

2.1 Repair Cost Estimate (904110)

CONSTRUCTION COST ESTIMATE

for

GEIGER KEY BRIDGE REPAIR

Bridge #904110

MONROE COUNTY, FLORIDA

Item Number	Item Description and		Estimated Quantity	Unit	Unit Price	Total Amount Per Item
GEIGER KEY #904110						
101- 1	MOBILIZATION	15%	1	LS		$46,372.96
102- 1	MAINTENANCE OF TRAFFIC (# DAYS)	15%	1	LS		$46,372.96
104- 11	FLOATING TURBIDITY BARRIER		1128	LF	$15.00	$16,920.00
110- 3	REMOVAL OF EXISTING STRUCTURE		1781	LS/SF	$43.98	$78,339.38
339- 1	MISCELLANEOUS ASPHALT PAVEMENT		2	TN	$241.58	$402.63
400- 4- 4	CONCRETE CLASS IV, SUPERSTRUCTURE		70	CY	$994.36	$69,605.20
401- 70- 3	RESTORE SPALLED AREAS, LATEX MODIFIED MORTAR, ACRYLIC		127.0	CF	$558.33	$70,907.91
411- 1	EPOXY MATERIAL FOR CRACK INJECTION-STRUCTURES REHAB		61	GA	$145.00	$8,881.25
411- 1	(ASPHALT) EPOXY MATERIAL FOR CRACK INJECTION-STRUCTURES REHAB		4	GA	$145.00	$543.75
411- 2	CRACKS INJECT & SEAL-STRUCTURES REHAB		474	LF	$80.00	$37,920.00
411- 2	(ASPHALT) CRACKS INJECT & SEAL-STRUCTURES REHAB		30	LF	$80.00	$2,400.00
415- 1- 4	REINFORCING STEEL-SUPERSTRUCTURE		11380	LB	$1.50	$17,070.00
415- 1- 5	REINFORCING STEEL-SUBSTRUCTURE		711	LB	$1.50	$1,066.50
458- 1- 11	BRIDGE DECK EXPANSION JOINT, NEW CONSTRUCTION, F&I POURED JOINT W/ BACKER ROD		86	LF	$57.74	$4,936.77
705-10-3	OBJECT MARKER, TYPE 3		1	EA	$159.67	$159.67
					CONTINGENCIES 20%	$80,379.80
					TOTAL	$482,278.77

V. JLL 7/15

Kisinger Campo & Associates, Corp.

Allen Kisinger 1904-1985 engineering • inspection • planning

Project : Geiger Key Repair
Subject : Estimated Quantities

Calcs : JWG **Date :** 05/14
Check : JLL **Date :** 7/14

104- 11 FLOATING TURBIDITY BARRIER

Pile Bents

	Length (ft)	Width (ft)	Perimeter (ft)
Perimeter around bent	32	3.5	
5 ft working zone around bent	5	5	
Total barrier needed	42	13.5	111.00
Number of bents			4
Layers of barrier around work area (double)			2

LENGTH: 888 LF

Abutments

	Length (ft)	Width (ft)	Perimeter (ft)
Perimeter around abutment	32	4	
5 ft working zone around abutment	5	5	
Total barrier needed	42	9	60.00
Number of abutments			2
Layers of barrier around work area (double)			2

LENGTH: 240 LF

TOTAL LENGTH: 1128 LF

110- 3 REMOVAL OF EXISTING STRUCTURE

	Area (SF)
Center portion of bridge	1781.3
	1781.3

TOTAL AREA: 1781 SF
1 LS

339- 1 MISCELLANEOUS ASPHALT PAVEMENT

	Weight (TN)
Settlement	1.7
	1.7

TOTAL WEIGHT: 1.7 TN

Kisinger Campo & Associates, Corp.

Allen Kisinger 1904-1981 engineering • inspection • planning

Project : Geiger Key Repair
Subject : Estimated Quantities

Calcs : JWG **Date :** 05/14
Check : JLL **Date :** 7/14

400- 4- 4 CONCRETE CLASS IV, SUPERSTRUCTURE

	Volume (cy)
Concrete Deck	44.0
Beams & Diaphragms	26.0
	70.0

TOTAL VOLUME: 70.0 CY

401- 70- 3 RESTORE SPALLED AREAS, LATEX MODIFIED MORTAR- ACRYLIC

	Volume (cf)
Beams & Diaphragms	6.6
Prestressed Piles	1.2
Bent Caps	93.8
Abutments	23.4
Approach Slabs	2.0
Retaining Walls	0.0
	127.0

TOTAL VOLUME: 127.0 CF

411- 1 EPOXY MATERIAL FOR CRACK INJECTION-STRUCTURES REHAB

	Volume (Gal)
Prestressed Piles	11.3
Bent Caps	26.3
Abutments	16.3
Approach Slabs	1.3
Retaining Walls	6.3
	61.3

TOTAL VOLUME: 61 GA

411- 1 (ASPHALT) EPOXY MATERIAL FOR CRACK INJECTION-STRUCTURES REHAB

	Volume (Gal)
Asphalt	3.8
	3.8

TOTAL VOLUME: 4 GA

Kisinger Campo & Associates, Corp.

Allen Kisinger 1904-1981 engineering • inspection • planning

Project : Geiger Key Repair
Subject : Estimated Quantities

Calcs : JWG **Date :** 05/14
Check : JLL **Date :** 7/14

411- 2 CRACKS INJECT & SEAL-STRUCTURES REHAB

	Length (LF)
Prestressed Piles	85.0
Bent Caps	200.0
Abutments	127.0
Approach Slabs	12.0
Retaining Walls	50.0
	474.0

TOTAL LENGTH: 474 **LF**

411- 2 (ASPHALT) CRACKS INJECT & SEAL-STRUCTURES REHAB

	Length (LF)
Asphalt	30.0
	30.0

TOTAL LENGTH: 30 **LF**

415- 1- 4 REINFORCING STEEL-SUPERSTRUCTURE

	Volume concrete (cf)	Steel density* (lb/cf)	Steel (lb)
Reinforcing steel	1896.6 OK	6 OK	11379.6

TOTAL WEIGHT: 11380 **LB**

*Based on similar estimates

415- 1- 5 REINFORCING STEEL-SUBSTRUCTURE

	Volume concrete (cf)	Steel density* (lb/cf)	Steel (lb)
Reinforcing steel from spall repair	118.4	6	710.4
			710.4

TOTAL WEIGHT: 711 **LB**

*Based on similar estimates

Kisinger Campo & Associates, Corp.

Allen Kisinger 1904-1981 engineering • inspection • planning

Project : Geiger Key Repair
Subject : Estimated Quantities

Calcs : JWG **Date :** 05/14
Check : JLL **Date :** 7/14

458- 1- 11 **BRIDGE DECK EXPANSION JOINT, NEW CONSTRUCTION, F&I POURED JOINT W/**

	Number of spans	Number of joints	Width (ft)	Total length (ft)
Spans 1-5	5	6	14.250	85.500

TOTAL LENGTH: 86 **LF**

705-10-3 **OBJECT MARKER, TYPE 3**

Location	Number of markers
Southwest corner	1
	1

TOTAL POSTS: 1 **EA**

2.2 Replacement Cost Estimate (904110)

CONSTRUCTION COST ESTIMATE

for

GEIGER KEY BRIDGE REPLACEMENT

Bridge #904110

MONROE COUNTY, FLORIDA

Replacement Cost is based on FDOT Historical Bridge Cost per square foot

GEIGER KEY #904110

Use cost for short simple span Reinforced Concrete Flat Slab Bridge		$160.00
Increase by 3% due to construction over open water	3%	4.80
Increase by 20% due to phased construction	20%	$32.00
Increase by 40% due to work in Monroe County	40%	$64.00

Cost per Square Foot $260.80

Bridge Length (ft)	125.2
Bridge Width: 24'(Lanes)+4'(Shldr.)+5'(S/W) 1.08'+1.54'(Barriers) (ft)	36
Deck Area (sf)	4507
Bridge Cost	$1,175,477.76
Approach work, approach slab, and incidental items	$300,000.00

TOTAL $1,475,477.76

J:KRG 7/14

3.0 Similar Sound (904120)

3.1 Repair Cost Estimate (904120)

CONSTRUCTION COST ESTIMATE

for

SIMILAR SOUND BRIDGE REPAIR

Bridge #904120

MONROE COUNTY, FLORIDA

Item Number	Item Description and		Estimated Quantity	Unit	Unit Price	Total Amount Per Item
SIMILAR SOUND #904120						
101- 1	MOBILIZATION	15%	1	LS		$43,511.18
102- 1	MAINTENANCE OF TRAFFIC (# DAYS)	15%	1	LS		$43,511.18
104- 11	FLOATING TURBIDITY BARRIER		478	LF	$15.00	$7,170.00
110- 3	REMOVAL OF EXISTING STRUCTURE		1741	LS/SF	$43.98	$76,560.38
400- 4- 4	CLASS IV CONCRETE, SUPERSTRUCTURE		62	CY	$2,000.00	$124,000.00
401- 70- 3	RESTORE SPALLED AREAS, LATEX MODIFIED MORTAR, ACRYLIC		72.2	CF	$558.33	$40,311.43
411- 1	EPOXY MATERIAL FOR CRACK INJECTION-STRUCTURES REHAB		6	GA	$145.00	$906.25
411- 2	CRACKS INJECT & SEAL-STRUCTURES REHAB		52	LF	$80.00	$4,160.00
415- 1- 4	REINFORCING STEEL-SUPERSTRUCTURE		10044	LB	$1.50	$15,066.00
415- 1- 5	REINFORCING STEEL-SUBSTRUCTURE		434	LB	$1.50	$651.00
458- 1- 11	BRIDGE DECK EXPANSION JOINT, NEW CONSTRUCTION, F&IPOURED JOINT WITH BACKER ROD		102	LF	$57.74	$5,889.48
521- 5- 1	CONCRETE TRAFFIC RAILING, BRIDGE 32" F-SHAPE		102	LF	$150.00	$15,360.00
					CONTINGENCIES 20%	$75,419.38
					TOTAL	$452,516.28

*INCLUDES SUPERSTRUCTURE REPLACEMENT

(MORE COST EFFECTIVE THAN S.S. SPALL REPAIR)

V: JLL 8/14

Kisinger Campo & Associates, Corp.

Allen Kisinger 1904-1981 engineering • inspection • planning

Project : Similar Sound Repair
Subject : Estimated Quantities

Calcs : JWG **Date :** 05/14
Check : JLL **Date :** 7/14

104- 11 FLOATING TURBIDITY BARRIER

Pile Bents

	Length (ft)	Width (ft)	Perimeter (ft)
Perimeter around bent	34	3.5	
5 ft working zone around bent	5	5	
Total barrier needed	44	13.5	115.00

Number of bents	1
Layers of barrier around work area (double)	2

LENGTH: 230 LF

Abutments

	Length (ft)	Width (ft)	Perimeter (ft)
Perimeter around abutment	34	4	
5 ft working zone around abutment	5	5	
Total barrier needed	44	9	62.00

Number of abutments	2
Layers of barrier around work area (double)	2

LENGTH: 248 LF

TOTAL LENGTH: 478 LF

110- 3 REMOVAL OF EXISTING STRUCTURE

	Area (SF)
Entire bridge span	1740.8
	1740.8

TOTAL AREA: 1741 SF
1 LS

400- 4- 4 CLASS IV CONCRETE, SUPERSTRUCTURE

	Volume (cy)
Concrete Deck	43.0
Beams & Diaphragms	19.0
	62.0

TOTAL VOLUME: 62.0 CY

Kisinger Campo & Associates, Corp.

Allen Kisinger 1904-1981 engineering • inspection • planning

Project : Similar Sound Repair
Subject : Estimated Quantities

Calcs : JWG **Date :** 05/14
Check : JLL **Date :** 7/14

401- 70- 3 RESTORE SPALLED AREAS, LATEX MODIFIED MORTAR- ACRYLIC

	Volume (cf)	
Prestressed Piles	3.8	
Bent Caps	4.2	
Retaining Walls	10.8	
Abutments	53.4	
	72.2	

TOTAL VOLUME: 72.2 CF

411- 1 EPOXY MATERIAL FOR CRACK INJECTION-STRUCTURES REHAB

	Volume (Gal)	
Prestressed Piles	1.3	
Bent Caps	0.0	
Retaining Walls	5.0	
Abutments	0.0	
	6.3	

TOTAL VOLUME: 6 GA

411- 2 CRACKS INJECT & SEAL-STRUCTURES REHAB

	Length (LF)	
Prestressed Piles	9.0	
Bent Caps	3.0	
Retaining Walls	40.0	
Abutments	0.0	
	52.0	

TOTAL LENGTH: 52 LF

415- 1- 4 REINFORCING STEEL-SUPERSTRUCTURE

	Volume concrete (cf)		Steel density* (lb/cf)		Steel (lb)	
Reinforcing steel	1674.0	OK	6	OK	10044.0	

TOTAL WEIGHT: 10044 LB

*Based on similar estimates

Kisinger Campo & Associates, Corp.

Allen Kisinger 1904-1981 engineering • inspection • planning

Project : Similar Sound Repair
Subject : Estimated Quantities

Calcs : JWG **Date :** 05/14
Check : JLL **Date :** 7/14

415- 1- 5 REINFORCING STEEL-SUBSTRUCTURE

	Volume concrete (cf)	Steel density* (lb/cf)	Steel (lb)
Reinforcing steel from spall repair	72.2	6	433.2
			433.2

TOTAL WEIGHT: 434 LB

*Based on similar estimates

458- 1- 11 BRIDGE DECK EXPANSION JOINT, NEW CONSTRUCTION, F&I POURED JOINT WITH BACKER ROD

	Number of spans	Number of joints	Width of bridge (ft)	Total length (ft)
Spans 1-2	2	3	34.000	102.000

TOTAL LENGTH: 102 LF

521- 5- 1 CONCRETE TRAFFIC RAILING, BRIDGE 32" F-SHAPE

	Number of Railings	Length of bridge (ft)	Total length (ft)
Spans 1-2	2	51.200	102.400

TOTAL LENGTH: 102 LF

3.2 Replacement Cost Estimate (904120)

CONSTRUCTION COST ESTIMATE

for

SIMILAR SOUND BRIDGE REPLACEMENT

Bridge #904120

MONROE COUNTY, FLORIDA

Replacement Cost is based on FDOT Historical Bridge Cost per square foot		
SIMILAR SOUND #904120		
Use cost for medium simple span Florida I-Beam Bridge		$145.00
Increase by 3% due to construction over open water	3%	4.35
Increase by 20% due to phased construction	20%	$29.00
Increase by 75% due to work in Monroe County (FIB Construction)	75%	$108.75

Cost per Square Foot	$287.10

Bridge Length (ft)	51.2
Bridge Width: 24'(Lanes)+4'(Shldr.)+5'(S/W) 1.08'+1.54'(Barriers) (ft)	36
Deck Area (sf)	1843
Bridge Cost	$529,182.72
Approach work, approach slab, and incidental items	$300,000.00

TOTAL	$829,182.72

4.0 Bay Point (904140)

4.1 Repair Cost Estimate (904140)

CONSTRUCTION COST ESTIMATE

for

BAY POINT BRIDGE REPAIR

Bridge #904140

MONROE COUNTY, FLORIDA

Item Number	Item Description and		Estimated Quantity	Unit	Unit Price	Total Amount Per Item
BAY POINT #904140						
101- 1	MOBILIZATION	15%	1	LS		$4,015.34
102- 1	MAINTENANCE OF TRAFFIC (# DAYS)	15%	1	LS		$4,015.34
401- 70- 3	RESTORE SPALLED AREAS, LATEX MODIFIED MORTAR, ACRYLIC		41.2	CF	$558.33	$23,003.20
411- 1	EPOXY MATERIAL FOR CRACK INJECTION-STRUCTURES REHAB		4	GA	$145.00	$543.75
411- 2	CRACKS INJECT & SEAL-STRUCTURES REHAB		30	LF	$80.00	$2,400.00
415- 1- 4	REINFORCING STEEL-SUPERSTRUCTURE		20	LB	$1.50	$30.00
415- 1- 5	REINFORCING STEEL-SUBSTRUCTURE		228	LB	$1.50	$342.00
460- 1- 13	STRUCT STEEL REHAB-BOLT, NUT, WASH & PLT		3	LB	$150.00	$450.00
					CONTINGENCIES 20%	$6,959.93
					TOTAL	$41,759.56

Kisinger Campo & Associates, Corp.

Allen Kisinger 1904-1981 engineering · inspection · planning

Project : Bay Point Repair
Subject : Estimated Quantities

Calcs : JWG **Date :** 05/14
Check : JLL **Date :** 7/14

401- 70- 3 RESTORE SPALLED AREAS, LATEX MODIFIED MORTAR- ACRYLIC

	Volume (cf)
Approach Slabs	3.2
Abutments	38.0
	41.2

TOTAL VOLUME: 41.2 CF

411- 1 EPOXY MATERIAL FOR CRACK INJECTION-STRUCTURES REHAB

	Volume (Gal)
Approach Slabs	2.5
Abutments	1.3
	3.8

TOTAL VOLUME: 4 GA

411- 2 CRACKS INJECT & SEAL-STRUCTURES REHAB

	Length (LF)
Approach Slabs	20.0
Abutments	10.0
	30.0

TOTAL LENGTH: 30 LF

415- 1- 4 REINFORCING STEEL-SUPERSTRUCTURE

	Volume concrete (cf)	Steel density* (lb/cf)	Steel (lb)
Reinforcing steel	3.2	6	19.2

TOTAL WEIGHT: 20 LB

*Based on similar estimates

Kisinger Campo & Associates, Corp.

Allen Kisinger 1904-1981 engineering • inspection • planning

Project : Bay Point Repair
Subject : Estimated Quantities

Calcs : JWG **Date :** 05/14
Check : **Date :**

415- 1- 5 REINFORCING STEEL-SUBSTRUCTURE

	Volume concrete (cf)	Steel density* (lb/cf)	Steel (lb)
Reinforcing steel from spall repair	38.0	6	228.0
			228.0

TOTAL WEIGHT: 228 **LB**

*Based on similar estimates

460- 1- 13 STRUCTURAL STEEL REHAB-BOLT, NUT, WASH & PLT

Type	Number of Lock Nuts	Weight (lb)	Total Weight (lb)*
Guardrail Lock Nuts	3	1.0	3.0
			3.0

TOTAL WEIGHT: 3 **LB**

4.2 Replacement Cost Estimate (904140)

CONSTRUCTION COST ESTIMATE

for

BAY POINT BRIDGE REPLACEMENT

Bridge #904140

MONROE COUNTY, FLORIDA

Replacement Cost is based on FDOT Historical Bridge Cost per square foot

BAY POINT #904140

Use cost for short simple span Reinforced Concrete Flat Slab Bridge		$160.00
Increase by 3% due to construction over open water	3%	4.80
Increase by 20% due to phased construction	20%	$32.00
Increase by 40% due to work in Monroe County	40%	$64.00

Cost per Square Foot $260.80

Bridge Length (ft)	22.4
Bridge Width: 24'(Lanes)+4'(Shldr.)+5'(S/W) 1.08'+1.54'(Barriers) (ft)	36
Deck Area (sf)	806
Bridge Cost	$210,309.12
Approach work, approach slab, and incidental items	$150,000.00

TOTAL $360,309.12

V: KRG
7/14

5.0 Shore Drive (904152)

5.1 Repair Cost Estimate (904152)

CONSTRUCTION COST ESTIMATE

for

SHORE DRIVE BRIDGE REPAIR

Bridge #904152

MONROE COUNTY, FLORIDA

Item Number	Item Description and		Estimated Quantity	Unit		Unit Price	Total Amount Per Item
SHORE DRIVE #904152							
101- 1	MOBILIZATION	15%	1	LS			$25.20
102- 1	MAINTENANCE OF TRAFFIC (# DAYS)	15%	1	LS			$25.20
411- 1	(ASPHALT) EPOXY MATERIAL FOR CRACK INJECTION-STRUCTURES REHAB		8	GA		$145.00	$1,087.50
411- 2	(ASPHALT) CRACKS INJECT & SEAL-STRUCTURES REHAB		60	LF		$80.00	$4,800.00
561- 1	COATING EXISTING STRUCTURAL STEEL		1	LS	0	Total @ $2000/T	$168.00
						CONTINGENCIES 20%	$1,221.18
						TOTAL	$7,327.08

* Pay Item 561- 1 includes the cost of painting the railing steel hardware.

V:JLL 7/14

Kisinger Campo & Associates, Corp.

Allen Kisinger 1904-1981 engineering • inspection • planning

Project : Shore Drive Repair
Subject : Estimated Quantities

Calcs : JWG **Date :** 05/14
Check : JLL **Date :** 7/14

411- 1 (ASPHALT) EPOXY MATERIAL FOR CRACK INJECTION-STRUCTURES REHAB

	Volume (Gal)
Asphalt	7.5
	7.5

TOTAL VOLUME: 8 **GA**

411- 2 (ASPHALT) CRACKS INJECT & SEAL-STRUCTURES REHAB

	Length (LF)
Asphalt	60.0
	60.0

TOTAL LENGTH: 60 **LF**

561- 1 COATING EXISTING STRUCTURAL STEEL

*Total weight taken from images.

	Number of plates	Weight (lb)	Total Weight (ton)*
Structural Steel (Base Plates)	28	6.0	168.0

Convert to tons: 0.1

TOTAL WEIGHT: 0 **TN**

5.2 Replacement Cost Estimate (904152)

CONSTRUCTION COST ESTIMATE

for

SHORE DRIVE BRIDGE REPLACEMENT

Bridge #904152

MONROE COUNTY, FLORIDA

Replacement Cost is based on FDOT Historical Bridge Cost per square foot		
SHORE DRIVE #904152		
Use cost for short simple span Prestressed Slab Unit Bridge		$160.00
Increase by 3% due to construction over open water	3%	4.80
Increase by 20% due to phased construction	20%	$32.00
Increase by 40% due to work in Monroe County	40%	$64.00

Cost per Square Foot	$260.80

Bridge Length (ft)	35.1
Bridge Width: 24'(Lanes)+4'(Shldr.)+5'(S/W) 1.08'+1.54'(Barriers) (ft)	36
Deck Area (sf)	1264
Bridge Cost	$329,546.88
Approach work, approach slab, and incidental items	$300,000.00

TOTAL	$629,546.88

J. KRE
7/14

6.0 Sugarloaf Boulevard (904153)

6.1 Repair Cost Estimate (904153)

CONSTRUCTION COST ESTIMATE

for

SUGARLOAF BOULEVARD BRIDGE REPAIR

Bridge #904153

MONROE COUNTY, FLORIDA

Item Number	Item Description and		Estimated Quantity	Unit	Unit Price	Total Amount Per Item
SUGARLOAF BOULEVARD #904153						
101- 1	MOBILIZATION	15%	1	LS		$78,795.93
102- 1	MAINTENANCE OF TRAFFIC (# DAYS)	15%	1	LS		$78,795.93
104- 11	FLOATING TURBIDITY BARRIER		616	LF	$15.00	$9,240.00
401- 70- 3	RESTORE SPALLED AREAS, LATEX MODIFIED MORTAR, ACRYLIC		805.2	CF	$558.33	$449,567.32
411- 1	EPOXY MATERIAL FOR CRACK INJECTION-STRUCTURES REHAB		31	GA	$145.00	$4,531.25
411- 2	CRACKS INJECT & SEAL-STRUCTURES REHAB		247	LF	$80.00	$19,760.00
413-151	METHACRYLATE MONOMER		32	GA	$123.00	$3,895.72
413-154	CLEANING AND SEALING CONCRETE SURFACES: PENETRANT SEALER OR METHACRYLATES		3167.3	SF	$0.98	$3,103.91
415- 1- 4	REINFORCING STEEL-SUPERSTRUCTURE		4060	LB	$1.50	$6,090.00
415- 1- 5	REINFORCING STEEL-SUBSTRUCTURE		772	LB	$1.50	$1,158.00
458- 1- 21	BRIDGE DECK EXPANSION JOINT, REHABILITATION, POURED JOINT WITH BACKER ROD		103	LF	$120.00	$12,360.00
530- 1	RIPRAP, SAND-CEMENT		24.0	CY	$650.00	$15,600.00
					CONTINGENCIES 20%	$136,579.61
					TOTAL	$819,477.65

Kisinger Campo & Associates, Corp.

Allen Kisinger 1904-1981 engineering • inspection • planning

Project : Sugarloaf Boulevard Repair
Subject : Estimated Quantities

Calcs : JWG **Date :** 05/14
Check : JLL **Date :** 7/14

104- 11 FLOATING TURBIDITY BARRIER

Pile Bents

	Length (ft)	Width (ft)	Perimeter (ft)
Perimeter around bent	26	3.5	
5 ft working zone around bent	5	5	
Total barrier needed	36	13.5	99.00
Number of bents			2
Layers of barrier around work area (double)			2

LENGTH: 396 LF

Abutments

	Length (ft)	Width (ft)	Perimeter (ft)
Perimeter around abutment	27	4	
5 ft working zone around abutment	5	5	
Total barrier needed	37	9	55.00
Number of abutments			2
Layers of barrier around work area (double)			2

LENGTH: 220 LF

TOTAL LENGTH: 616 LF

401- 70- 3 RESTORE SPALLED AREAS, LATEX MODIFIED MORTAR- ACRYLIC

	Volume (cf)
Concrete Deck	670.8
Approach Slabs	0.0
Beams & Diaphragms	5.8
Prestressed Piles	1.2
Bent Caps	125.0
Retaining Walls	2.4
Abutments	0.0
	805.2

TOTAL VOLUME: 805.2 CF

Kisinger Campo & Associates, Corp.

Allen Kisinger 1904-1981 engineering · inspection · planning

Project : Sugarloaf Boulevard Repair
Subject : Estimated Quantities

Calcs : JWG **Date :** 05/14
Check : JLL **Date :** 7/14

411- 1 EPOXY MATERIAL FOR CRACK INJECTION-STRUCTURES REHAB

	Volume (Gal)
Concrete Deck	8.8
Approach Slabs	10.0
Beams & Diaphragms	3.8
Prestressed Piles	3.8
Bent Caps	0.0
Retaining Walls	1.3
Abutments	3.8
	31.3

TOTAL VOLUME: 31 **GA**

411- 2 CRACKS INJECT & SEAL-STRUCTURES REHAB

	Length (LF)
Concrete Deck	70.0
Approach Slabs	80.0
Beams & Diaphragms	27.0
Prestressed Piles	28.0
Bent Caps	0.0
Retaining Walls	14.0
Abutments	28.0
	247.0

TOTAL LENGTH: 247 **LF**

Kisinger Campo & Associates, Corp.

Allen Kisinger 1904-1981 engineering • inspection • planning

Project : Sugarloaf Boulevard Repair
Subject : Estimated Quantities

Calcs : JWG **Date :** 05/14
Check : JLL **Date :** 7/14

413-151 **METHACRYLATE MONOMER**

Location	Width (ft)	Span (ft)	Surface area (SF)
Existing Deck	25.75	123.00	3167.3
			3167.3

	Volume (GA)
100 SF / GA	**31.7**

TOTAL AREA: 32 **GA**

413-154 **CLEANING AND SEALING CONCRETE SURFACES: PENETRANT SEALER OR**

Location	Width (ft)	Span (ft)	Surface area (SF)
Existing Deck	25.75	123.00	3167.3
			3167.3

TOTAL AREA: 3,167.3 **SF**

Kisinger Campo & Associates, Corp.

Allen Kisinger 1904-1981 engineering • inspection • planning

Project : Sugarloaf Boulevard Repair
Subject : Estimated Quantities

Calcs : JWG **Date :** 05/14
Check : JLL **Date :** 7/14

415- 1- 4 REINFORCING STEEL-SUPERSTRUCTURE

	Volume concrete (cf)	Steel density* (lb/cf)	Steel (lb)
Reinforcing steel	676.6	6	4059.6

TOTAL WEIGHT: 4060 **LB**

*Based on similar estimates

415- 1- 5 REINFORCING STEEL-SUBSTRUCTURE

	Volume concrete (cf)	Steel density* (lb/cf)	Steel (lb)
Reinforcing steel from spall repair	128.6	6	771.6
			771.6

TOTAL WEIGHT: 772 **LB**

*Based on similar estimates

458- 1- 21 BRIDGE DECK EXPANSION JOINT, REHABILITATION,

	Number of spans	Width of bridge (ft)	Total length (ft)
Spans 1-3	4	25.750	103.000

TOTAL LENGTH: 103 **LF**

530- 1 RIPRAP, SAND-CEMENT

	Total Volume (CY)
Existing Erosion	23.3

TOTAL VOLUME: 24 **CY**

6.2 Replacement Cost Estimate (904153)

✓: JLL
8/26/14

DETAILED REPLACEMENT COST (904153)

Bridge Development Report Cost Estimating

Effective 01/01/2014

Step One: Estimate Component Items

Utilizing the cost provided herein, develop the cost estimate for each bridge type under consideration.

A. Bridge Substructure

1. Prestressed Concrete Piling, (furnished and installed)

Size of Piling	Cost per Lin. Foot [1]	Quantity	Cost
18" (Driven Plumb or 1" Batter)	$75		
18" (Driven Battered)	$90		
24" (Driven Plumb or 1" Batter)	$100	350	$35,000
24" (Driven Battered)	$130		
30" (Driven Plumb or 1" Batter)	$120		
30" (Driven Battered)	$185		
Heavy mild steel reinforcing in pile head (each)	$250		
		Subtotal	$35,000

1 When silica fume, metakaolin or ultrafine fly ash is used add $6/LF to the piling cost.

2. Steel Piling, (furnished and installed)

Size of Piling	Cost per Lin. Foot	Quantity	Cost
14 x 73 H Section	$70		
14 x 89 H Section	$90		
18" Pipe Pile	$95		
20" Pipe Pile	$110		
24" Pipe Pile	$140		
30" Pipe Pile	$160		
		Subtotal	

3. Drilled Shaft (Total in-place cost)			
Dia. (on land, casing salvaged)	**Cost per Lin. Foot**	**Quantity**	**Cost**
3 ft	$450		
4 ft	$550		
5 ft	$600		
6 ft	$680		
7 ft	$825		
8 ft	$1,550		
9 ft	$1,800		
Dia. (in water, casing salvaged)	**Cost per Lin. Foot**	**Quantity**	**Cost**
3 ft	$500		
4 ft	$625		
5 ft	$700		
6 ft	$825		
7 ft	$950		
8 ft	$1,650		
9 ft	$1,900		
Dia. (in water, permanent casing)	**Cost per Lin. Foot**	**Quantity**	**Cost**
3 ft	$625		
4 ft	$750		
5 ft	$850		
6 ft	$990		
7 ft	$1,250		
8 ft	$2,200		
9 ft	$2,400		
		Subtotal	

A. Bridge Substructure (continued)

4. Cofferdam Footing (Cofferdam and Seal Concrete[1])			
Prorate the cost provided herein based on area and depth of water. A cofferdam footing having the following attributes cost $600,000: Area 63 ft x 37.25 ft; Depth of seal 5 ft; Depth of water over footing 16 ft			
Type	**Cost per Footing**	**Quantity**	**Cost**
Cofferdam Footing			
1 Cost of seal concrete included in pay item 400-3-20 or 400-4-200.		**Subtotal**	

5. Substructure Concrete			
Type	**Cost per Cubic Yard**	**Quantity**	**Cost**
End Bent Concrete [1]	$1,200	42	$50,400
Wall Concrete [1]	$1,200	92.44444444	$110,933
Seal Concrete [1]	$410		
Bulkhead Concrete [1]	$975		
Shell Fill [1]	$30		
Riprap	$800	27.77777778	$22,222
1 Admixtures: For Calcium Nitrite add $40/cy (@4.5 gal/cy) and for silica fume, metakaolin or ultrafine fly ash add $40/cy (@ 60 lb./cy)		**Subtotal**	$183,556

6. Substructure Reinforcing and Post-tensioning Steel			
Type	**Cost per Pound**	**Quantity**	**Cost**
Reinforcing Steel	$1.50	21,900	$32,850
Post-tensioning Steel, Strand	$4		
Post-tensioning Steel, Bars	$6		
		Subtotal	$32,850

Substructure Subtotal $251,406

B. Walls

1. Retaining Walls			
MSE Walls	**Cost per Sq. Foot**	**Quantity**	**Cost**
Permanent	$26		
Temporary	$14		
Sheet Pile Walls, Prestressed Concrete	**Cost per Lin. Foot**	**Quantity**	**Cost**
10" x 30"	$110		
12" x 30"	$120		
Sheet Pile Walls, Steel	**Cost per Sq. Foot**	**Quantity**	**Cost**
Permanent Cantilever Wall	$24		
Permanent Anchored Wall [1]	$50		
Temporary Cantilever Wall	$14		
Temporary Anchored Wall [1]	$35		
Traffic Railings with Junction Slabs	**Cost per Lin. Foot**	**Quantity**	**Cost**
32" F Shape or Vertical Face	$145		
42" F Shape or Vertical Face	$165		
		Subtotal	

1 Includes the cost of anchors, waler steel, miscellaneous steel for permanent/temporary walls and concrete face for permanent walls.

2. Noise Wall			
Type	**Cost per Sq. Foot**	**Quantity**	**Cost**
Noise Wall	$25		
		Subtotal	

Walls Subtotal

C. Bridge Superstructure

1. Bearing Type			
Neoprene Bearing Pads	**Cost per Cubic Foot**	**Quantity**	**Cost**
Neoprene Bearing Pads	$900	5.69	$5,121
Multirotational Bearings (Capacity in kips)	**Cost per Each**	**Quantity**	**Cost**
1- 250	$6,000		
251- 500	$7,000		
501- 750	$8,000		
751-1000	$9,500		
1001-1250	$9,900		
1251-1500	$10,000		
1501-1750	$11,000		
1751-2000	$12,500		
>2000	$15,000		
		Subtotal	$5,121

2. Bridge Girders			
Structural Steel (includes coating)	**Cost per Pound**	**Quantity**	**Cost**
Rolled Wide Flange Sections, straight [1]	**$1.70**		
Rolled Wide Flange Sections, curved [1]	**$1.85**		
Plate Girders, Straight [1]	**$1.70**		
Plate Girders, Curved [1]	**$1.90**		
Box Girders, Straight [1]	**$1.95**		
Box Girders, Curved [1]	**$2.05**		
Prestressed Concrete Girders and Slabs	**Cost per Lin. Foot**	**Quantity**	**Cost**
Fl. Inverted Tee 16" [2]	**$80**		
Fl. Inverted Tee 20"	**$90**		
Fl. Inverted Tee 24" [2]	**$105**		
Fl. Tub (U-Beam) 48" [2]	**$700**		
Fl. Tub (U-Beam) 54"	**$750**		
Fl. Tub (U-Beam) 63"	**$800**		
Fl. Tub (U-Beam) 72"	**$900**		
Solid Flat Slab (<48"x12")	**$150**		
Solid Flat Slab (<48"x15")	**$160**		
Solid Flat Slab (48"x12")	**$160**		
Solid Flat Slab (48"x15")	**$170**		
Solid Flat Slab (60"x12")	**$170**		
Solid Flat Slab (60"x15")	**$180**		
AASHTO Type II Beam	**$98**		
Florida-I; 36 [3]	**$235**	**490**	**$115,150**
Florida-I; 45 [3]	**$235**		
Florida-I; 54 [3]	**$210**		
Florida-I; 63 [3]	**$220**		
Florida-I; 72 [3]	**$230**		
Florida-I; 78 [3]	**$235**		
Florida-I; 84 [3]	**$270**		
Florida-I; 96 [3]	**$350**		
Haunched Florida-I; 78	**$700**		
Haunched Florida-I; 84	**$800**		
		Subtotal	**$115,150**

1 When weathering steel (uncoated) is used, reduce the price by $0.04 per pound. Inorganic zinc coating systems have an expected life cycle of 20 years.

2 Price is based on ability to furnish products without any conversions of casting beds and without purchasing o forms. If these conditions do not exist, add the following cost: Inverted Tee - $202,000: Fl. Tub - $403,000

3 The prices of Florida-I Beams range in value from large quantity (low price) to small quantity (high price).

C. Bridge Superstructure (continued)

3. Cast-in-Place Superstructure Concrete			
Type	**Cost per Cubic Yard**	**Quantity**	**Cost**
Box Girder Concrete, Straight	$950		
Box Girder Concrete, Curved	$1,100		
Deck Concrete	$1,200	89.72222222	$107,667
Precast Deck Overlay Concrete Class IV	$600		
		Subtotal	$107,667

4. Concrete for Precast Segmental Box Girders, Cantilever Construction			
Concrete Cost by Deck Area	**Cost per Cubic Yard**	**Quantity**	**Cost**
≤ 300,000 SF	$1,250		
> 300,000 SF AND ≤ 500,000 SF	$1,200		
> 500,000 SF	$1,150		
		Subtotal	

5. Reinforcing and Post-Tensioning Steel			
Type	**Cost per Pound**	**Quantity**	**Cost**
Reinforcing Steel	$1.50	18,393	$27,590
Post-tensioning Steel, Strand; longitudinal	$2.50		
Post-tensioning Steel, Strand; transverse	$4.00		
Post-tensioning Steel, Bars	$6.00		
		Subtotal	$27,590

6. Railings and Barriers			
Traffic Railings [1]	**Cost per Lin. Foot**	**Quantity**	**Cost**
32" F-Shape	$70	165	$11,550
32" F-Shape Median	$80		
42" F-Shape	$86		
32" Vertical Face	$90	165	$14,850
42" Vertical Face	$115		
32" Corral	$130		
Thrie Beam Retrofit	$140		
Thrie Beam Panel Retrofit	$110		
Vertical Face Retrofit	$100		
Pedestrian/Bicycle Railings:	**Cost per Lin. Foot**	**Quantity**	**Cost**
Decorative Concrete Railing	$150		
Single Bullet Railing[1]	$27		
Double Bullet Railing[1]	$36		
Triple Bullet Railing[1]	$45		
Picket Railing (42") steel (Type 1)	$86		
Picket Railing (42") steel (Type 3)	$200		
Panel/Picket Railing (42") aluminum (Type 1)	$63		
Panel/Picket Railing (54") steel	$95		
Panel/Picket Railing (54") aluminum (Type 1)	$80		
		Subtotal	$26,400

1 Combine cost of Bullet Railings with Concrete Parapet or Traffic Railing, as appropriate.

7. Expansion Joints

Type	Cost per Lin. Foot	Quantity	Cost
Strip Seal	$400		
Finger Joint <6"	$850		
Finger Joint >6"	$1,500		
Modular 6"	$500		
Modular 8"	$700		
Modular 12"	$900		
		Subtotal	

Superstructure Subtotal $281,927

D. Miscellaneous Items

1. Bridge Deck Grooving and Planing

Type	Cost per Sq. Yard	Quantity	Cost
Grooving - Deck Thickness less than 8.5"	$4.50		
Grooving and Planing- Deck Thickness 8.5"+	$14	3570	$49,980
		Grooving and Planing Subtotal	$49,980

2. Detour Bridges

Type	Cost per Sq. Foot	Quantity	Cost
Acrow Detour Bridge [1]	$55		
		Detour Bridge Subtotal	

1 Using FDOT supplied components. The cost is for the bridge proper and does not include approach work, surfacing, or guardrail.

3. Approach Slab

Approach Slab Material	Cost per Unit	Quantity	Cost
Cast-in-Place Concrete (per Sq. Yard)	$800	80	$64,000
Reinforcing Steel (per Pound)	$1.00	3,778	$3,778
Railing Type per Superstructure Section 6 (per Lin. Foot)			
		Approach Slab Subtotal	$67,778

Unadjusted Total $651,091

Step Two: Estimate Conditional Variables and Cost per Square Foot

After developing the total cost estimate utilizing the unit cost, modify the cost to account for site condition variables. If appropriate, the cost will be modified by the following variables:

Conditional Variables	% Increase/ Decrease	Cost (+/-)
For construction over open water, floodplains that flood frequently or other similar areas, increase cost by 3 %.	3%	$19,533
Phased construction, increase by 20 %. [1]	20%	$130,218.12
Unit cost increase for work in Monroe County	40%	$260,436.23
Mobilization	15%	$97,663.59
Maintenance of Traffic	15%	$97,663.59
Approach Work, Demo and Incidental Items	20%	$130,218.12
	113%	$735,732

1 Phased construction is defined as construction over traffic or construction requiring multiple phases to complete the construction of the entire cross section of the bridge. The 20 percent premium is applied to the affected units of the superstructure and/or substructure.

Substructure Subtotal	$251,406
Superstructure Subtotal	$281,927
Walls Subtotal	
Grooving and Planing Subtotal	$49,980
Detour Bridge Subtotal	
Approach Slab Subtotal	$67,778
Conditional Variables	$735,732
Total Cost	$1,386,823

Total Square Feet of Deck	3420

Cost per Square Foot (not including Approach Slab)	$290

Design Aid for Determination of Reinforcing Steel

In the absence of better information, use the following quantities of reinforcing steel pounds per cubic yard of

Location	Pounds of Steel per Cubic Yard	Cubic Yds.	Tot. Pounds
Pile Abutments	135	162.2222222	21,900
Pile Bents	145		
Single Column Piers >25'	210		
Single Column Piers <25'	150		
Multiple Column Piers >25'	215		
Multiple Column Piers <25'	195		
Bascule Piers	110		
Standard Deck Slabs	205	89.72222222	18,393
Isotropic Deck Slabs	125		
Concrete Box Girders, Pier Seg	225		
Concrete Box Girders, Typ. Seg	165		
C.I.P. Flat Slabs @ 30ft & 15" Deep	220		
Approach Slab	200	18.89	3,778

Step Three: Cost Estimate Comparison to Historical Bridge Cost

[redacted]

The final step is a comparison of the cost estimate by comparison with historic bridge cost based on a cost per square foot.

Bridge Superstructure Type	Total Cost per Square Foot Low	High
Short Span Bridges:		
Reinforced Concrete Flat Slab- Simple Span [1]	$115	$160
Pre-cast Concrete Slab - Simple Span [1]	$110	$200
Medium Span Bridges:		
Concrete Deck / Steel Girder - Simple Span [1]	$125	$142
Concrete Deck / Steel Girder - Continuous Span [1]	$135	$170
Concrete Deck / Prestressed Girder - Simple Span [1]	$90	$145
Concrete Deck / Prestressed Girder - Continuous Span [1]	$95	$211
Concrete Deck / Steel Box Girder [1] - Span range from 150' to 280' (for curvature, add 15% premium)	$140	$180
Segmental Concrete Box Girders - Cantilever Construction Span range from 150' to 280'	$140	$160
Movable Bridge - Bascule Spans & Piers	$1,800	$2,000
Demolition Costs:		
Typical	$35	$60
Bascule	$60	$70
Project Type		
Widening (Construction Only)	$85	$160

1 Increase the cost by twenty percent for phased construction

Estimated Cost per Square Foot **$290**

7.0 Sugarloaf Creek (904155)

7.1 Repair Cost Estimate (904155)

CONSTRUCTION COST ESTIMATE

for

SUGARLOAF CREEK BRIDGE REPAIR

Bridge #904155

MONROE COUNTY, FLORIDA

Item Number	Item Description and		Estimated Quantity	Unit	Unit Price	Total Amount Per Item
SUGARLOAF CREEK #904155						
101- 1	MOBILIZATION	15%	1	LS		$41,999.99
102- 1	MAINTENANCE OF TRAFFIC (# DAYS)	15%	1	LS		$41,999.99
104- 11	FLOATING TURBIDITY BARRIER		1088	LF	$15.00	$16,320.00
121- 70	FLOWABLE FILL		1	CY	$200.00	$166.67
401- 70- 3	RESTORE SPALLED AREAS, LATEX MODIFIED MORTAR, ACRYLIC		100.0	CF	$558.33	$55,833.00
411- 1	EPOXY MATERIAL FOR CRACK INJECTION-STRUCTURES REHAB		5	GA	$145.00	$725.00
411- 1	(ASPHALT) EPOXY MATERIAL FOR CRACK INJECTION-STRUCTURES REHAB		164	GA	$145.00	$23,743.75
411- 2	CRACKS INJECT & SEAL-STRUCTURES REHAB		42	LF	$80.00	$3,360.00
411- 2	(ASPHALT) CRACKS INJECT & SEAL-STRUCTURES REHAB		1260	LF	$80.00	$100,800.00
415- 1- 4	REINFORCING STEEL-SUPERSTRUCTURE		51	LB	$1.50	$76.50
415- 1- 5	REINFORCING STEEL-SUBSTRUCTURE		550	LB	$1.50	$825.00
458- 1- 21	BRIDGE DECK EXPANSION JOINT, REHABILITATION, POURED JOINT WITH BACKER ROD		245	LF	$120.00	$29,400.00
530- 1	RIPRAP, SAND-CEMENT		75	CY	$650.00	$48,750.00
					CONTINGENCIES 20%	$72,799.98
					TOTAL	$436,799.87

V: JLL 7/14

Kisinger Campo & Associates, Corp.

Allen Kisinger 1904-1985 engineering • inspection • planning

Project : Sugarloaf Creek Repair
Subject : Estimated Quantities

Calcs : JWG **Date :** 05/14
Check : JLL **Date :** 7/14

104- 11 FLOATING TURBIDITY BARRIER

Pile Bents

	Length (ft)	Width (ft)	Perimeter (ft)
Perimeter around bent	30	3.5	
5 ft working zone around bent	5	5	
Total barrier needed	40	13.5	107.00
Number of bents			4
Layers of barrier around work area (double)			2

LENGTH: 856 LF

Abutments

	Length (ft)	Width (ft)	Perimeter (ft)
Perimeter around abutment	30	4	
5 ft working zone around abutment	5	5	
Total barrier needed	40	9	58.00
Number of abutments			2
Layers of barrier around work area (double)			2

LENGTH: 232 LF

TOTAL LENGTH: 1088 LF

121- 70 FLOWABLE FILL

	Length (ft)	Height (ft)	Depth (ft)	Volume (CY)
Gap in Abutment 6 slope	30	0.25	1.5	0.4

Assume 100% additional quantity 1.0

TOTAL VOLUME: 0.8 CY

401- 70- 3 RESTORE SPALLED AREAS, LATEX MODIFIED MORTAR- ACRYLIC

	Volume (cf)
Concrete Deck	8.4
Prestressed Piles	1.6
Bent Caps	82.4
Abutments	7.6
	100.0

TOTAL VOLUME: 100.0 CF

Kisinger Campo & Associates, Corp.

Allen Kisinger 1904-1985 engineering • inspection • planning

Project : Sugarloaf Creek Repair
Subject : Estimated Quantities

Calcs : JWG **Date :** 05/14
Check : JLL **Date :** 7/14

411- 1 EPOXY MATERIAL FOR CRACK INJECTION-STRUCTURES REHAB

	Volume (Gal)
Concrete Deck	3.8
Prestressed Piles	0.0
Bent Caps	0.0
Abutments	1.3
	5.0

TOTAL VOLUME: 5 GA

411- 1 (ASPHALT) EPOXY MATERIAL FOR CRACK INJECTION-STRUCTURES REHAB

	Volume (Gal)
Asphalt	163.8
	163.8

TOTAL VOLUME: 164 GA

411- 2 CRACKS INJECT & SEAL-STRUCTURES REHAB

	Length (LF)
Concrete Deck	30.0
Prestressed Piles	0.0
Bent Caps	0.0
Abutments	12.0
	42.0

TOTAL LENGTH: 42 LF

411- 2 (ASPHALT) CRACKS INJECT & SEAL-STRUCTURES REHAB

	Length (LF)
Asphalt	1260.0
	1260.0

TOTAL LENGTH: 1260 LF

Kisinger Campo & Associates, Corp.

Allen Kisinger 1904-1981 engineering • inspection • planning

Project : Sugarloaf Creek Repair
Subject : Estimated Quantities

Calcs : JWG **Date :** 05/14
Check : JLL **Date :** 7/14

415- 1- 4 REINFORCING STEEL-SUPERSTRUCTURE

	Volume concrete (cf)	Steel density* (lb/cf)	Steel (lb)
Reinforcing steel	8.4	6	50.4

TOTAL WEIGHT: 51 **LB**

*Based on similar estimates

415- 1- 5 REINFORCING STEEL-SUBSTRUCTURE

	Volume concrete (cf)	Steel density* (lb/cf)	Steel (lb)
Reinforcing steel from spall repair	91.6	6	549.6
			549.6

TOTAL WEIGHT: 550 **LB**

*Based on similar estimates

458- 1- 21 BRIDGE DECK EXPANSION JOINT, REHABILITATION,

	Number of spans	Width of bridge (ft)	Total length (ft)
Spans 1-5	6	30.000	180.000
Approach Slabs (Longitudinal)	2	32.500	65.000

TOTAL LENGTH: 245 **LF**

530- 1 RIPRAP, SAND-CEMENT

Location	Total Volume (CF)
Northeast Slope Protection	74.1
	74.1

TOTAL VOLUME: 75 **CY**

7.2 Replacement Cost Estimate (904155)

CONSTRUCTION COST ESTIMATE

for

SUGARLOAF CREEK BRIDGE REPLACEMENT

Bridge #904155

MONROE COUNTY, FLORIDA

Replacement Cost is based on FDOT Historical Bridge Cost per square foot

SUGARLOAF CREEK #904155

Use cost for short simple span Prestressed Slab Unit Bridge		$160.00
Increase by 3% due to construction over open water	3%	4.80
Increase by 20% due to phased construction	20%	$32.00
Increase by 40% due to work in Monroe County	40%	$64.00

Cost per Square Foot $260.80

Bridge Length (ft)	200
Bridge Width: 24'(Lanes)+4'(Shldr.)+5'(S/W) 1.08'+1.54'(Barriers) (ft)	36
Deck Area (sf)	7200
Bridge Cost	$1,877,760.00
Approach work, approach slab, and incidental items	$300,000.00

TOTAL $2,177,760.00

V:KRG
7/14

8.0 Old S.R. 939 (CR 939) (904160)

8.1 Repair Cost Estimate (904160)

CONSTRUCTION COST ESTIMATE

for

OLD S.R. 4A (CR 939) BRIDGE REPAIR

Bridge #904160

MONROE COUNTY, FLORIDA

Item Number	Item Description and		Estimated Quantity	Unit	Unit Price	Total Amount Per Item
OLD S.R. 4A (CR 939) #904160						
101- 1	MOBILIZATION	15%	1	LS		$18,040.46
102- 1	MAINTENANCE OF TRAFFIC (# DAYS)	15%	1	LS		$18,040.46
104- 11	FLOATING TURBIDITY BARRIER		352	LF	$15.00	$5,280.00
339- 1	MISCELLANEOUS ASPHALT PAVEMENT		1	TN	$241.58	$257.69
401- 70- 3	RESTORE SPALLED AREAS, LATEX MODIFIED MORTAR, ACRYLIC		60.6	CF	$558.33	$33,834.80
411- 1	EPOXY MATERIAL FOR CRACK INJECTION-STRUCTURES REHAB		8	GA	$145.00	$1,087.50
411- 1	(ASPHALT) EPOXY MATERIAL FOR CRACK INJECTION-STRUCTURES REHAB		64	GA	$145.00	$9,243.75
411- 2	CRACKS INJECT & SEAL-STRUCTURES REHAB		60	LF	$80.00	$4,800.00
411- 2	(ASPHALT) CRACKS INJECT & SEAL-STRUCTURES REHAB		492	LF	$80.00	$39,360.00
415- 1- 4	REINFORCING STEEL-SUPERSTRUCTURE		304	LB	$1.50	$456.00
415- 1- 5	REINFORCING STEEL-SUBSTRUCTURE		60	LB	$1.50	$90.00
458- 1- 21	BRIDGE DECK EXPANSION JOINT, REHABILITATION, POURED JOINT WITH BACKER ROD		118	LF	$120.00	$14,160.00
530- 1	RIPRAP, SAND-CEMENT		18.0	CY	$650.00	$11,700.00
					CONTINGENCIES 20%	$31,270.13
					TOTAL	$187,620.78

V:JLL
7/14

Kisinger Campo & Associates, Corp.

Allen Kisinger 1904-1981 — engineering · inspection · planning

Project : Old S.R. 939 Repair
Subject : Estimated Quantities

Calcs : JWG **Date :** 05/14
Check : JLL **Date :** 7/14

104- 11 FLOATING TURBIDITY BARRIER

Bents

	Length (ft)	Width (ft)	Perimeter (ft)
Perimeter around bent	60	4	
5 ft working zone around bent	5	5	
Total barrier needed	70	9	88.00

Number of bents	2
Layers of barrier around work area (double)	2

LENGTH: 352 LF

TOTAL LENGTH: 352 LF

339- 1 MISCELLANEOUS ASPHALT PAVEMENT

	Weight (TN)
Settlement (FIRE DAMAGE)	1.1
	1.1

TOTAL WEIGHT: 1.1 TN

401- 70- 3 RESTORE SPALLED AREAS, LATEX MODIFIED MORTAR- ACRYLIC

	Volume (cf)
Railing	14.6
Concrete Deck	36.0
Prestressed Piles	0.2
Bent Caps	2.0
Abutments	7.8
	60.6

TOTAL VOLUME: 60.6 CF

411- 1 EPOXY MATERIAL FOR CRACK INJECTION-STRUCTURES REHAB

	Volume (Gal)
Railing	0.0
Concrete Deck	5.0
Prestressed Piles	0.0
Bent Caps	0.0
Abutments	2.5
	7.5

TOTAL VOLUME: 8 GA

Kisinger Campo & Associates, Corp.

Allen Kisinger 1904-1981 engineering · inspection · planning

Project : Old S.R. 939 Repair
Subject : Estimated Quantities

Calcs : JWG **Date :** 05/14
Check : JLL **Date :** 7/14

411- 1 (ASPHALT) EPOXY MATERIAL FOR CRACK INJECTION-STRUCTURES REHAB

	Volume (Gal)
Asphalt	63.8
	63.8

TOTAL VOLUME: 64 GA

411- 2 CRACKS INJECT & SEAL-STRUCTURES REHAB

	Length (LF)
Railing	2.0
Concrete Deck	40.0
Prestressed Piles	0.0
Bent Caps	2.0
Abutments	16.0
	60.0

TOTAL LENGTH: 60 LF

411- 2 (ASPHALT) CRACKS INJECT & SEAL-STRUCTURES REHAB

	Length (LF)
Asphalt	492.0
	492.0

TOTAL LENGTH: 492 LF

415- 1- 4 REINFORCING STEEL-SUPERSTRUCTURE

	Volume concrete (cf)	Steel density* (lb/cf)	Steel (lb)
Reinforcing steel	50.6	6	303.6

TOTAL WEIGHT: 304 LB

*Based on similar estimates

415- 1- 5 REINFORCING STEEL-SUBSTRUCTURE

	Volume concrete (cf)	Steel density*	Steel (lb)
Reinforcing steel from spall repair	10.0	6	60.0
			60.0

TOTAL WEIGHT: 60 LB

Kisinger Campo & Associates, Corp.

Allen Kisinger 1904-1981 engineering • inspection • planning

Project : Old S.R. 939 Repair
Subject : Estimated Quantities

Calcs : JWG **Date :** 05/14
Check : JLL **Date :** 7/14

*Based on similar estimates

458- 1- 21 **BRIDGE DECK EXPANSION JOINT, REHABILITATION,**

	Number of spans	Width of bridge (ft)	Total length (ft)
Spans 1-3	4	29.500	118.000

TOTAL LENGTH: 118 LF

530- 1 **RIPRAP, SAND-CEMENT**

Location	Length (ft)	Area (SF)	Total Volume (CF)
Abutment 1 Bank	60	4.0	240.0
Abutment 4 Bank	60	4.0	240.0
			17.8

TOTAL VOLUME: 18 CY

8.2 Replacement Cost Estimate (904160)

CONSTRUCTION COST ESTIMATE

for

OLD S.R. 4A (CR 939) BRIDGE REPLACEMENT

Bridge #904160

MONROE COUNTY, FLORIDA

Replacement Cost is based on FDOT Historical Bridge Cost per square foot

OLD S.R. 4A (CR 939) #904160

Use cost for short simple span Prestressed Slab Unit Bridge		$160.00
Increase by 3% due to construction over open water	3%	4.80
Increase by 20% due to phased construction	20%	$32.00
Increase by 40% due to work in Monroe County	40%	$64.00

Cost per Square Foot $260.80

Bridge Length (ft)	82
Bridge Width: 24'(Lanes)+4'(Shldr.)+5'(S/W) 1.08'+1.54'(Barriers) (ft)	36
Deck Area (sf)	2952
Bridge Cost	$769,881.60
Approach work, approach slab, and incidental items	$300,000.00

TOTAL $1,069,881.60

V: ILL 7/14

9.0 Caribbean Drive (904250)

9.1 Repair Cost Estimate (904250)

CONSTRUCTION COST ESTIMATE

for

CARIBBEAN DRIVE BRIDGE REPAIR

Bridge #904250

MONROE COUNTY, FLORIDA

Item Number	Item Description and		Estimated Quantity	Unit		Unit Price	Total Amount Per Item
CARIBBEAN DRIVE #904250							
101- 1	MOBILIZATION	15%	1	LS			$2,275.76
102- 1	MAINTENANCE OF TRAFFIC (# DAYS)	15%	1	LS			$2,275.76
104- 11	FLOATING TURBIDITY BARRIER		224	LF		$15.00	$3,360.00
401- 70- 3	RESTORE SPALLED AREAS, LATEX MODIFIED MORTAR, ACRYLIC		3.6	CF		$558.33	$2,009.99
411- 1	EPOXY MATERIAL FOR CRACK INJECTION-STRUCTURES REHAB		4	GA		$145.00	$543.75
411- 1	(ASPHALT) EPOXY MATERIAL FOR CRACK INJECTION-STRUCTURES REHAB		5	GA		$145.00	$725.00
411- 2	CRACKS INJECT & SEAL-STRUCTURES REHAB		25	LF		$80.00	$2,000.00
411- 2	(ASPHALT) CRACKS INJECT & SEAL-STRUCTURES REHAB		40	LF		$80.00	$3,200.00
415- 1- 5	REINFORCING STEEL-SUBSTRUCTURE		22	LB		$1.50	$33.00
530- 1	RIPRAP, SAND-CEMENT		2	CY		$650.00	$1,300.00
561- 1	COATING EXISTING STRUCTURAL STEEL		1	LS	1.0	Total @ $2000/T	$2,000.00
						CONTINGENCIES 20%	$3,944.65
						TOTAL	$23,667.91

* Pay Item 561- 1 includes the cost of painting railing base plates.

V: JLL 7/14

Kisinger Campo & Associates, Corp.

Allen Kisinger 1904-1981 — engineering • inspection • planning

Project : Caribbean Drive Repair
Subject : Estimated Quantities

Calcs : JWG **Date :** 05/14
Check : JLL **Date :** 7/14

104- 11 FLOATING TURBIDITY BARRIER

Abutments

	Length (ft)	Width (ft)	Perimeter (ft)
Perimeter around abutment	28	4	
5 ft working zone around abutment	5	5	
Total barrier needed	38	9	56.00
Number of abutments			2
Layers of barrier around work area (double)			2

LENGTH: 224 LF

TOTAL LENGTH: 224 LF

401- 70- 3 RESTORE SPALLED AREAS, LATEX MODIFIED MORTAR- ACRYLIC

	Volume (cf)
Concrete Deck	3.6
	3.6

TOTAL VOLUME: 3.6 CF

411- 1 EPOXY MATERIAL FOR CRACK INJECTION-STRUCTURES REHAB

	Volume (Gal)
Concrete Deck	3.8
	3.8

TOTAL VOLUME: 4 GA

411- 1 (ASPHALT) EPOXY MATERIAL FOR CRACK INJECTION-STRUCTURES REHAB

	Volume (Gal)
Asphalt	5.0
	5.0

TOTAL VOLUME: 5 GA

411- 2 CRACKS INJECT & SEAL-STRUCTURES REHAB

	Length (LF)
Concrete Deck	25.0
	25.0

TOTAL LENGTH: 25 LF

Kisinger Campo & Associates, Corp.

Allen Kisinger 1904-1981 engineering · inspection · planning

Project : Caribbean Drive Repair
Subject : Estimated Quantities

Calcs : JWG **Date :** 05/14
Check : SLL **Date :** 7/14

411- 2 (ASPHALT) CRACKS INJECT & SEAL-STRUCTURES REHAB

	Length (LF)
Asphalt	40.0
	40.0

TOTAL LENGTH: 40 LF

415- 1- 5 REINFORCING STEEL-SUBSTRUCTURE

	Volume concrete (cf)	Steel density* (lb/cf)	Steel (lb)
Reinforcing steel from spall repair	3.6	6	21.6
			21.6

TOTAL WEIGHT: 22 LB

*Based on similar estimates

530- 1 RIPRAP, SAND-CEMENT

	Total Volume (CY)
Underwater Void	2.000

TOTAL VOLUME: 2 CY

561- 1 COATING EXISTING STRUCTURAL STEEL

*Total weight estimate based on images.

	Number	Steel (lb)	Total Weight (ton)*
Structural Steel (Coat Entire Railing)	20	100.0	2000.0
		Convert to tons:	1.0

TOTAL WEIGHT: 1.00000 TN

9.2 Replacement Cost Estimate (904250)

CONSTRUCTION COST ESTIMATE

for

CARIBBEAN DRIVE BRIDGE REPLACEMENT

Bridge #904250

MONROE COUNTY, FLORIDA

Replacement Cost is based on FDOT Historical Bridge Cost per square foot

CARIBBEAN DRIVE #904250

Use cost for short simple span Prestressed Slab Unit Bridge		$160.00
Increase by 3% due to construction over open water	3%	4.80
Increase by 20% due to phased construction	20%	$32.00
Increase by 40% due to work in Monroe County	40%	$64.00

Cost per Square Foot $260.80

Bridge Length (ft)	24.2
Bridge Width: 24'(Lanes)+4'(Shldr.)+5'(S/W) 1.08'+1.54'(Barriers) (ft)	36
Deck Area (sf)	871
Bridge Cost	$227,208.96
Approach work, approach slab, and incidental items	$300,000.00

TOTAL $527,208.96

J:KKG
7/14

CONSTRUCTION COST ESTIMATE

for

OLD S.R. 4A (CR 939) BARRIER REPLACEMENT

Bridge #904160

MONROE COUNTY, FLORIDA

Item Number	Item Description and		Estimated Quantity	Unit	Unit Price	Total Amount Per Item
OLD S.R. 4A (CR 939) #904160						
101- 1	MOBILIZATION	50%	1	LS		$49,077.50
102-1	MAINTANENCE OF TRAFFIC (# OF DAYS)	20%	2	LS		$19,631.00
110-3	REMOVAL OF EXISTING STRUCTURES		399	SF	$45.00	$17,955.00
400-4-4	CLASS IV CONCRETE, SUPERSTRUCTURE		11	CY	$5,000.00	$55,000.00
521-5-1	CONCRETE TRAFFIC RAILING, BRIDGE 32" F SHAPE		168	LF	$150.00	$25,200.00
					CONTINGENCIES 50%	$83,431.75
					TOTAL	$250,295.25

* CLASS IV CONCRETE USED TO REBUILD/STRENGTHEN OVERHANGS
* HIGH CONTIGINCY AND MOBILIZATION TO ACCOUNT FOR SMALL JOB WITH UTILITY IMPACTS/ADJUSTMENTS

10.0 Watson Boulevard (904305)

10.1 Repair Cost Estimate (904305)

CONSTRUCTION COST ESTIMATE

for

WATSON BOULEVARD BRIDGE REPAIR

Bridge #904305

MONROE COUNTY, FLORIDA

Item Number	Item Description and		Estimated Quantity	Unit	Unit Price	Total Amount Per Item
WATSON BOULEVARD #904305						
101- 1	MOBILIZATION	15%	1	LS		$6,207.29
102- 1	MAINTENANCE OF TRAFFIC (# DAYS)	15%	1	LS		$6,207.29
104- 11	FLOATING TURBIDITY BARRIER		224	LF	$15.00	$3,360.00
401- 70- 3	RESTORE SPALLED AREAS, LATEX MODIFIED MORTAR, ACRYLIC		17.4	CF	$558.33	$9,714.94
411- 1	EPOXY MATERIAL FOR CRACK INJECTION-STRUCTURES REHAB		4	GA	$145.00	$543.75
411- 1	(ASPHALT) EPOXY MATERIAL FOR CRACK INJECTION-STRUCTURES REHAB		24	GA	$145.00	$3,443.75
411- 2	CRACKS INJECT & SEAL-STRUCTURES REHAB		26	LF	$80.00	$2,080.00
411- 2	(ASPHALT) CRACKS INJECT & SEAL-STRUCTURES REHAB		186	LF	$80.00	$14,880.00
415- 1- 4	REINFORCING STEEL-SUPERSTRUCTURE		105	LB	$1.50	$157.50
458- 1- 21	BRIDGE DECK EXPANSION JOINT, REHABILITATION, POURED JOINT WITH BACKER ROD		55	LF	$120.00	$6,552.00
530- 1	RIPRAP, SAND-CEMENT		1	CY	$650.00	$650.00
					CONTINGENCIES 20%	$10,759.30
					TOTAL	$64,555.83

Kisinger Campo & Associates, Corp.

Allen Kisinger 1904-1981 engineering • inspection • planning

Project : Watson Avenue Repair
Subject : Estimated Quantities

Calcs : JWG **Date :** 05/14
Check : JLL **Date :** 7/14

104- 11 FLOATING TURBIDITY BARRIER

Abutments

	Length (ft)	Width (ft)	Perimeter (ft)
Perimeter around abutment	28	4	
5 ft working zone around abutment	5	5	
Total barrier needed	38	9	56.00
Number of abutments			2
Layers of barrier around work area (double)			2

LENGTH: 224 LF

TOTAL LENGTH: 224 LF

401- 70- 3 RESTORE SPALLED AREAS, LATEX MODIFIED MORTAR- ACRYLIC

	Volume (cf)
Railing	0.0
Concrete Deck	17.4
	17.4

TOTAL VOLUME: 17.4 CF

411- 1 EPOXY MATERIAL FOR CRACK INJECTION-STRUCTURES REHAB

	Volume (Gal)
Railing	2.5
Concrete Deck	1.3
	3.8

TOTAL VOLUME: 4 GA

411- 1 (ASPHALT) EPOXY MATERIAL FOR CRACK INJECTION-STRUCTURES REHAB

	Volume (Gal)
Asphalt	23.8
	23.8

TOTAL VOLUME: 24 GA

Kisinger Campo & Associates, Corp.

Allen Kisinger 1904-1981 engineering • inspection • planning

Project : Watson Avenue Repair
Subject : Estimated Quantities

Calcs : JWG **Date :** 05/14
Check : JLL **Date :** 7/14

411- 2 CRACKS INJECT & SEAL-STRUCTURES REHAB

	Length (LF)
Railing	20.0
Concrete Deck	6.0
	26.0

TOTAL LENGTH: 26 **LF**

411- 2 (ASPHALT) CRACKS INJECT & SEAL-STRUCTURES REHAB

	Length (LF)
Asphalt	186.0
	186.0

TOTAL LENGTH: 186 **LF**

415- 1- 4 REINFORCING STEEL-SUPERSTRUCTURE

	Volume concrete (cf)	Steel density* (lb/cf)	Steel (lb)
Reinforcing steel	17.4	6	104.4

TOTAL WEIGHT: 105 **LB**

*Based on similar estimates

458- 1- 21 BRIDGE DECK EXPANSION JOINT, REHABILITATION,

	Number of joints	Width of bridge (ft)	Total length (ft)
Span 1	2	27.300	54.600

TOTAL LENGTH: 55 **LF**

530- 1 RIPRAP, SAND-CEMENT

	Total Volume (CY)
Existing Undermining	0.6

TOTAL VOLUME: 1 **CY**

10.2 Replacement Cost Estimate (904305)

CONSTRUCTION COST ESTIMATE

for

WATSON BOULEVARD BRIDGE REPLACEMENT

Bridge #904305

MONROE COUNTY, FLORIDA

Replacement Cost is based on FDOT Historical Bridge Cost per square foot

WATSON BOULEVARD #904305

Use cost for short simple span Prestressed Slab Unit Bridge		$160.00
Increase by 3% due to construction over open water	3%	4.80
Increase by 20% due to phased construction	20%	$32.00
Increase by 40% due to work in Monroe County	40%	$64.00

Cost per Square Foot $260.80

Bridge Length (ft)	26.1
Bridge Width: 24'(Lanes)+4'(Shldr.)+5'(S/W) 1.08'+1.54'(Barriers) (ft)	36
Deck Area (sf)	940
Bridge Cost	$245,047.68
Approach work, approach slab, and incidental items	$300,000.00

TOTAL $545,047.68

11.0 Fern Avenue (904307)

11.1 Repair Cost Estimate (904307)

CONSTRUCTION COST ESTIMATE

for

FERN AVENUE BRIDGE REPAIR

Bridge #904307

MONROE COUNTY, FLORIDA

Item Number	Item Description and		Estimated Quantity	Unit	Unit Price	Total Amount Per Item
FERN AVENUE #904307						
101- 1	MOBILIZATION	15%	1	LS		$4,804.50
102- 1	MAINTENANCE OF TRAFFIC (# DAYS)	15%	1	LS		$4,804.50
401- 70- 3	RESTORE SPALLED AREAS, LATEX MODIFIED MORTAR, ACRYLIC		3.2	CF	$558.33	$1,786.66
411- 1	EPOXY MATERIAL FOR CRACK INJECTION-STRUCTURES REHAB		6	GA	$145.00	$906.25
411- 1	(ASPHALT) EPOXY MATERIAL FOR CRACK INJECTION-STRUCTURES REHAB		24	GA	$145.00	$3,443.75
411- 2	CRACKS INJECT & SEAL-STRUCTURES REHAB		48	LF	$80.00	$3,840.00
411- 2	(ASPHALT) CRACKS INJECT & SEAL-STRUCTURES REHAB		187	LF	$80.00	$14,960.00
415- 1- 4	REINFORCING STEEL-SUPERSTRUCTURE		20	LB	$1.50	$30.00
458- 1- 21	BRIDGE DECK EXPANSION JOINT, REHABILITATION, POURED JOINT WITH BACKER ROD		56	LF	$120.00	$6,744.00
705-10-3	OBJECT MARKER, TYPE 3		2	EA	$159.67	$319.34
					CONTINGENCIES 20%	$8,327.80
					TOTAL	$49,966.79

V: JLL
7/14

Kisinger Campo & Associates, Corp.

Allen Kisinger 1904-1981 engineering • inspection • planning

Project : Fern Avenue Repair
Subject : Estimated Quantities

Calcs : JWG **Date :** 05/14
Check : JLL **Date :** 7/14

401- 70- 3 RESTORE SPALLED AREAS, LATEX MODIFIED MORTAR- ACRYLIC

	Volume (cf)
Concrete Deck	3.2
	3.2

TOTAL VOLUME: 3.2 CF

411- 1 EPOXY MATERIAL FOR CRACK INJECTION-STRUCTURES REHAB

	Volume (Gal)
Concrete Deck	6.3
	6.3

TOTAL VOLUME: 6 GA

411- 1 (ASPHALT) EPOXY MATERIAL FOR CRACK INJECTION-STRUCTURES REHAB

	Volume (Gal)
Asphalt	23.8
	23.8

TOTAL VOLUME: 24 GA

411- 2 CRACKS INJECT & SEAL-STRUCTURES REHAB

	Length (LF)
Concrete Deck	48.0
	48.0

TOTAL LENGTH: 48 LF

411- 2 (ASPHALT) CRACKS INJECT & SEAL-STRUCTURES REHAB

	Length (LF)
Asphalt	187.0
	187.0

TOTAL LENGTH: 187 LF

Kisinger Campo & Associates, Corp.

Allen Kisinger 1904-1981 engineering • inspection • planning

Project : Fern Avenue Repair
Subject : Estimated Quantities

Calcs : JWG **Date :** 05/14
Check : JLL **Date :** 7/14

415- 1- 4 REINFORCING STEEL-SUPERSTRUCTURE

	Volume concrete (cf)	Steel density* (lb/cf)	Steel (lb)
Reinforcing steel	3.2	6	19.2

TOTAL WEIGHT: 20 **LB**

*Based on similar estimates

458- 1- 21 BRIDGE DECK EXPANSION JOINT, REHABILITATION,

	Number of joints	Width of bridge (ft)	Total length (ft)
Span 1	2	28.100	56.200

TOTAL LENGTH: 56 **LF**

705-10-3 OBJECT MARKER, TYPE 3

Location	Number of markers
Northeast corner	1
Southwest corner	1
	2

TOTAL POSTS: 2 **EA**

11.2 Replacement Cost Estimate (904307)

CONSTRUCTION COST ESTIMATE

for

FERN AVENUE BRIDGE REPLACEMENT

Bridge #904307

MONROE COUNTY, FLORIDA

Replacement Cost is based on FDOT Historical Bridge Cost per square foot		
FERN AVENUE #904307		
Use cost for short simple span Prestressed Slab Unit Bridge		$160.00
Increase by 3% due to construction over open water	3%	4.80
Increase by 20% due to phased construction	20%	$32.00
Increase by 40% due to work in Monroe County	40%	$64.00

Cost per Square Foot	$260.80

Bridge Length (ft)	26.2
Bridge Width: 24'(Lanes)+4'(Shldr.)+5'(S/W) 1.08'+1.54'(Barriers) (ft)	36
Deck Area (sf)	943
Bridge Cost	$245,986.56
Approach work, approach slab, and incidental items	$300,000.00

TOTAL	$545,986.56

V:KRG
7/14

12.0 S.R. 940 – Leg A (Watson Boulevard) (904310)

12.1 Repair Cost Estimate (904310)

CONSTRUCTION COST ESTIMATE

for

S.R. 940 - LEG A (WATSON BOULEVARD) BRIDGE REPAIR

Bridge #904310

MONROE COUNTY, FLORIDA

Item Number	Item Description and		Estimated Quantity	Unit	Unit Price	Total Amount Per Item
S.R. 940 - LEG A (WATSON BOULEVARD) #904310						
101- 1	MOBILIZATION	15%	1	LS		$646.50
102- 1	MAINTENANCE OF TRAFFIC (# DAYS)	15%	1	LS		$646.50
104- 11	FLOATING TURBIDITY BARRIER		244	LF	$15.00	$3,660.00
530- 1	RIPRAP, SAND-CEMENT		1	CY	$650.00	$650.00
					CONTINGENCIES 20%	$1,120.60
					TOTAL	$6,723.60

Kisinger Campo & Associates, Corp.

Allen Kisinger 1904-1981 engineering • inspection • planning

Project : S.R. 940 - Leg A Repair
Subject : Estimated Quantities

Calcs : JWG **Date :** 05/14
Check : JLL **Date :** 7/14

104- 11 FLOATING TURBIDITY BARRIER

Abutments

	Length (ft)	Width (ft)	Perimeter (ft)
Perimeter around abutments	33	4	
5 ft working zone around abutments	5	5	
Total barrier needed	43	9	61.00
Number of abutments			2
Layers of barrier around work area (double)			2

LENGTH: 244 LF

TOTAL LENGTH: 244 LF

530- 1 RIPRAP, SAND-CEMENT

	Total Volume (CY)
Existing Erosion	0.2

TOTAL VOLUME: 1 CY

12.2 Replacement Cost Estimate (904310)

CONSTRUCTION COST ESTIMATE

for

S.R. 940 - LEG A (WATSON BOULEVARD) BRIDGE REPLACEMENT

Bridge #904310

MONROE COUNTY, FLORIDA

Replacement Cost is based on FDOT Historical Bridge Cost per square foot

S.R. 940 - LEG A (WATSON BOULEVARD) #904310

Use cost for short simple span Prestressed Slab Unit Bridge		$160.00
Increase by 3% due to construction over open water	3%	4.80
Increase by 20% due to phased construction	20%	$32.00
Increase by 40% due to work in Monroe County	40%	$64.00

Cost per Square Foot $260.80

Bridge Length (ft)	30
Bridge Width: 24'(Lanes)+4'(Shldr.)+5'(S/W) 1.08'+1.54'(Barriers) (ft)	36
Deck Area (sf)	1080
Bridge Cost	$281,664.00
Approach work, approach slab, and incidental items	$300,000.00

TOTAL $581,664.00

13.0 No Name Key (904320)

13.1 Repair Cost Estimate (904320)

CONSTRUCTION COST ESTIMATE

for

FPID # 430121-1-58-01

NO NAME KEY BRIDGE REPAIR

MONROE COUNTY, FLORIDA

Item Number	Item Description and		Estimated Quantity	Unit	Unit Price	Total Amount Per Item
NO NAME KEY BRIDGE #904320						
101- 1	MOBILIZATION	15%	1	LS		$553,669.08
102- 1	MAINTENANCE OF TRAFFIC (# DAYS)	15%	1	LS		$553,669.08
104- 11	FLOATING TURBIDITY BARRIER		6827	LF	$15.00	$102,405.00
400-142- 3	CATHODIC PROTECTION SYSTEM, ZINC ALUMINUM SPRAY		12514	SF	$55.00	$688,270.00
401- 70- 3	RESTORE SPALLED AREAS, LATEX MODIFIED MORTAR, ACRYLIC		3346.6	CF	$558.33	$1,868,507.18
411- 1	EPOXY MATERIAL FOR CRACK INJECTION-STRUCTURES REHAB		25	GA	$145.00	$3,625.00
411- 2	CRACKS INJECT & SEAL-STRUCTURES REHAB		100	LF	$80.00	$8,000.00
415- 1- 4	REINFORCING STEEL-SUPERSTRUCTURE		18482	LB	$1.50	$27,723.00
415- 1- 5	REINFORCING STEEL-SUBSTRUCTURE		1598	LB	$1.50	$2,397.00
455- 81-101	CATHODIC PROTECTION, F&I, PILE, ZINC ANODE ASSEMBLY		12	EA	$1,500.00	$18,000.00
457- 2-121	CATHODIC PROTECTIONINTEGRAL PIKE JACKET, NON-STRUCTURAL, 16.1" to 30" GALVANIC SYSTEM		141	LF	$2,300.00	$324,300.00
457- 2- 221	CATHODIC PROTECTION INTEGRAL PILE JACKET, STRUCTURAL, 16.1" to 30" GALVANIC SYSTEM		154	LF	$2,500.00	$385,000.00
458- 1- 21	BRIDGE DECK EXPANSION JOINT, REHABILITATION, POURED JOINT WITH BACKER ROD		1610	LF	$120.00	$193,200.00
561- 1	COATING EXISTING STRUCTURAL STEEL		1	LS		$69,700.00
					CONTINGENCIES 15%	$719,769.80
					TOTAL	$5,518,235.13

QUANTITIES FROM REPAIR PLANS.

ACTUAL LOW BID = $2,997,676

V: JLL
7/14

13.2 Replacement Cost Estimate (904320)

4. Recommendations

The six alternative previously described are as follows:

- Alternative 1 – Repair Existing Structure in Kind
- Alternative 2 – Superstructure Replacement in Kind (Spans 16-28)
- Alternative 3 – Superstructure Replacement with Vertical Face Retrofit (Spans 16-28)
- Alternative 4 – Superstructure Replacement for Entire Bridge
- Alternative 5 – Deck Replacement for Entire Bridge
- Alternative 6 – Bridge Replacement

In an effort to simplify the selection of the preferred alternate, a decision matrix was created. See Table 1 below for a decision matrix of all alternatives

Table 1 - Alternative Selection Matrix

Alternative	Cost	Environmental Impacts	Permitting Delays	Vehicular/ Pedestrian Impacts	Estimated Service Life	Exceptions Required
1	$7.4 M	Low	Low	Low	Low	No
2	$6.7 M	Medium	Medium	High	Medium	Barrier & Sidewalk
3	$8.1 M	Medium	Medium	High	Medium	Sidewalk
4	$10.6 M	High	High	High	Medium	No
5	$11.6 M	High	High	High	Medium	No
6	$14.6 M - $20.4 M	Very High	Very High	Low	Very High	No

The decision matrix gives a better view of the alternatives. It is very important to permit this project within the schedule limits so that the project can be funded the next fiscal year with available funds. In addition, as this bridge is the only access to No Name Key, vehicular and pedestrian impacts should be avoided. As a result, the preferred alternative is Alternative 1 – Repair Existing Structure in Kind. This will have the least amount of anticipated permitting delays, environmental impacts and vehicular and pedestrian impacts. In addition, through coordination with the FDOT District 6 Maintenance Office, it has been determined that repairing

the bridge in kind will not require processing an exception for both the obsolete post and beam railing and the non-compliant ADA sidewalks. However, this alternative will have a limited estimated service life of 10 to 12 years.

Alternatives 2 and 3 would provide a slightly longer estimated service life for close to the same cost as Alternative 1. However, the permitting delays due to the environmental impacts could delay the project past the scheduled funding timeframe. In addition, bridge closures would be required that would negatively impact the residents of No Name Key.

Alternatives 4 and 5 will provide ADA compliant sidewalks and crash tested barriers. However, there is a high possibility of long permitting delays that may extend outside of the funding limits. In addition, there is a significantly greater cost for these two alternatives even though the estimated service life of the bridge will still be controlled by the life of the substructure. Rather than spending approximately $10 M to $12 M repairing the bridge with a relatively short estimated service life, it would be more feasible to replace the bridge (Alternative 6) for an estimated cost of $14 M to $20 M. This would provide approximately a 75 year service life.

Alternative 6 (Bridge Replacement) is the best long term solution. Obtaining approvals and permitting a bridge replacement will be a long process. Consideration should be given to ensure that the estimated permitting duration does not exceed the usable life span of the repaired bridge when this alternative is pursued in the future.

The short term solution is to repair the bridge in kind to allow adequate time for a bridge replacement to be funded, permitted and designed. The proposed repairs consist of the following:

- Spall, delamination and crack repair for all elements
- Clean and replace all joints
- Clean and paint all exposed portions of bearing assemblies
- Non-structural pile jackets installed on all piles with cracks, pop out spalls or corrosion bleed out
- Structural pile jackets installed on all piles with large delaminations or exposed strands

- Bulk zinc anode assemblies will be installed on exposed steel H-pile tips
- All bent caps will receive a metalized coating after spall repair procedures

The total cost of these repairs including mobilization and maintenance of traffic is estimated to be $7,371,000.

14.0 Tom's Harbor Channel (904600)

14.1 Repair Cost Estimate (904600)

CONSTRUCTION COST ESTIMATE

for

TOM'S HARBOR CHANNEL BRIDGE REPAIR

Bridge #904600

MONROE COUNTY, FLORIDA

Item Number	Item Description and		Estimated Quantity	Unit	Unit Price	Total Amount Per Item
TOM'S HARBOR CHANNEL #904600						
101- 1	MOBILIZATION	15%	1	LS		$2,378.00
102- 1	MAINTENANCE OF TRAFFIC (# DAYS)	15%	1	LS		$2,378.00
104- 11	FLOATING TURBIDITY BARRIER		252	LF	$15.00	$3,780.00
401- 70- 3	RESTORE SPALLED AREAS, LATEX MODIFIED MORTAR, ACRYLIC		10.0	CF	$558.33	$5,583.30
415- 1- 4	REINFORCING STEEL-SUPERSTRUCTURE		60	LB	$1.50	$90.00
458- 1- 21	BRIDGE DECK EXPANSION JOINT, REHABILITATION, POURED JOINT WITH BACKER ROD		10	LF	$120.00	$1,200.00
530- 1	RIPRAP, SAND-CEMENT		8	CY	$650.00	$5,200.00
					CONTINGENCIES 20%	$4,121.86
					TOTAL	$24,731.15

Kisinger Campo & Associates, Corp.

Allen Kisinger 1904-1981 engineering • inspection • planning

Project : Tom's Harbor Channel
Subject : Estimated Quantities

Calcs : JWG **Date :** 05/14
Check : JLL **Date :** 7/14

104- 11 FLOATING TURBIDITY BARRIER

Abutments

	Length (ft)	Width (ft)	Perimeter (ft)
Perimeter around abutments	35	4	
5 ft working zone around bents	5	5	
Total barrier needed	45	9	63.00
Number of abutments			2
Layers of barrier around work area (double)			2

LENGTH: 252 LF

TOTAL LENGTH: 252 LF

401- 70- 3 RESTORE SPALLED AREAS, LATEX MODIFIED MORTAR- ACRYLIC

	Volume (cf)
Beams and Diapharagms	10.0
	10.0

TOTAL VOLUME: 10.0 CF

415- 1- 4 REINFORCING STEEL-SUPERSTRUCTURE

	Volume concrete (cf)	Steel density* (lb/cf)	Steel (lb)
Reinforcing steel	10.0	6	60.0

TOTAL WEIGHT: 60 LB

*Based on similar estimates

458- 1- 21 BRIDGE DECK EXPANSION JOINT, REHABILITATION,

	Number of joints	Width of repair (ft)	Total length (ft)
Joint 3	1	10.000	10.000

TOTAL LENGTH: 10 LF

Kisinger Campo & Associates, Corp.

Allen Kisinger 1904-1981 engineering • inspection • planning

Project : Tom's Harbor Channel
Subject : Estimated Quantities

Calcs : JWG **Date :** 05/14
Check : **Date :**

530- 1 **RIPRAP, SAND-CEMENT**

	Total Volume (CY)
Existing Undermining	8.0

TOTAL VOLUME: 8 **CY**

14.2 Replacement Cost Estimate (904600)

CONSTRUCTION COST ESTIMATE

for

TOM'S HARBOR CHANNEL BRIDGE REPLACEMENT

Bridge #904600

MONROE COUNTY, FLORIDA

Replacement Cost is based on FDOT Historical Bridge Cost per square foot		
TOM'S HARBOR CHANNEL #904600		
Use cost for medium simple span Florida I-Beam Bridge		$145.00
Increase by 3% due to construction over open water	3%	4.35
Increase by 20% due to phased construction	20%	$29.00
Increase by 75% due to work in Monroe County (FIB Construction)	75%	$108.75

Cost per Square Foot $287.10

Bridge Length (ft)	248
Bridge Width: 24'(Lanes)+4'(Shldr.)+5'(S/W) 1.08'+1.54'(Barriers) (ft)	36
Deck Area (sf)	8928
Bridge Cost	$2,563,228.80
Approach work, approach slab, and incidental items	$300,000.00

TOTAL $2,863,228.80

15.0 Truman Bridge (904602)

15.1 Repair Cost Estimate (904602)

CONSTRUCTION COST ESTIMATE

for

TRUMAN BRIDGE REPAIR

Bridge #904602

MONROE COUNTY, FLORIDA

Item Number	Item Description and		Estimated Quantity	Unit	Unit Price	Total Amount Per Item
TRUMAN BRIDGE #904602						
101- 1	MOBILIZATION	15%	1	LS		$15,330.63
102- 1	MAINTENANCE OF TRAFFIC (# DAYS)	15%	1	LS		$15,330.63
104- 11	FLOATING TURBIDITY BARRIER		668	LF	$15.00	$10,020.00
121- 70	FLOWABLE FILL		7	CY	$200.00	$1,422.22
400- 8- 5	CLASS V CONCRETE, SUBSTRUCTURE		2	CY	$942.10	$2,093.56
401- 70- 3	RESTORE SPALLED AREAS, LATEX MODIFIED MORTAR, ACRYLIC		6.8	CF	$558.33	$3,796.64
411- 1	EPOXY MATERIAL FOR CRACK INJECTION-STRUCTURES REHAB		5	GA	$145.00	$725.00
411- 1	(ASPHALT) EPOXY MATERIAL FOR CRACK INJECTION-STRUCTURES REHAB		14	GA	$145.00	$1,993.75
411- 2	CRACKS INJECT & SEAL-STRUCTURES REHAB		40	LF	$80.00	$3,200.00
411- 2	(ASPHALT) CRACKS INJECT & SEAL-STRUCTURES REHAB		105	LF	$80.00	$8,400.00
415- 1- 5	REINFORCING STEEL-SUBSTRUCTURE		486	LB	$1.50	$729.00
530- 1	BRIDGE DECK EXPANSION JOINT, REHABILITATION, POURED JOINT WITH BACKER ROD		105	LF	$120.00	$12,624.00
530- 1	RIPRAP, SAND-CEMENT		88	CY	$650.00	$57,200.00
					CONTINGENCIES 20%	$26,573.08
					TOTAL	$159,438.51

V. Jul 7/14

Kisinger Campo & Associates, Corp.

Allen Kisinger 1904-1981 engineering · inspection · planning

Project : Truman Bridge Repair
Subject : Estimated Quantities

Calcs : JWG **Date :** 05/14
Check : JLL **Date :** 7/14

104- 11 FLOATING TURBIDITY BARRIER

Pile Bents

	Length (ft)	Width (ft)	Perimeter (ft)
Perimeter around bent	27	9	
5 ft working zone around bent	5	5	
Total barrier needed	37	19	112.00
Number of bents			2
Layers of barrier around work area (double)			2
		LENGTH:	448 LF

Abutments

	Length (ft)	Width (ft)	Perimeter (ft)
Perimeter around abutments	27	4	
5 ft working zone around abutment	5	5	
Total barrier needed	37	9	55.00
Number of abutments			2
Layers of barrier around work area (double)			2
		LENGTH:	220 LF
		TOTAL LENGTH:	**668 LF**

121- 70 FLOWABLE FILL

	Length (ft)	Width (ft)	Height (ft)	Volume (CY)
Void in northeast retaining wall	4.0	4.0	6.0	3.6
Assume 100% additional quantity				1.0
			TOTAL VOLUME:	**7.1 CY**

400- 8- 5 CLASS V CONCRETE, SUBSTRUCTURE

	Depth (ft)	Width (ft)	Height (ft)	Volume (CY)
Void in northeast retaining wall	1.5	4	5	1.1
Assume 100% additional quantity				1.0
			TOTAL VOLUME:	**2.2 CY**

Kisinger Campo & Associates, Corp.

Allen Kisinger 1904-1981 engineering • inspection • planning

Project : Truman Bridge Repair
Subject : Estimated Quantities

Calcs : JWG **Date :** 05/14
Check : JLL **Date :** 7/14

401- 70- 3 RESTORE SPALLED AREAS, LATEX MODIFIED MORTAR- ACRYLIC

	Volume (cf)
Footers	2.0
Arches	3.0
Abutments	1.8
	6.8

TOTAL VOLUME: 6.8 CF

411- 1 EPOXY MATERIAL FOR CRACK INJECTION-STRUCTURES REHAB

	Volume (Gal)
Footers	2.5
Arches	0.0
Abutments	0.0
Retaining Walls	2.5
	5.0

TOTAL VOLUME: 5 GA

411- 1 (ASPHALT) EPOXY MATERIAL FOR CRACK INJECTION-STRUCTURES REHAB

	Volume (Gal)
Asphalt	13.8
	13.8

TOTAL VOLUME: 14 GA

411- 2 CRACKS INJECT & SEAL-STRUCTURES REHAB

	Length (LF)
Footers	20.0
Arches	0.0
Abutments	0.0
Retaining Walls	20.0
	40.0

TOTAL LENGTH: 40 LF

411- 2 (ASPHALT) CRACKS INJECT & SEAL-STRUCTURES REHAB

	Length (LF)
Asphalt	105.0
	105.0

TOTAL LENGTH: 105 LF

Kisinger Campo & Associates, Corp.

Allen Kisinger 1904-1981 engineering • inspection • planning

Project : Truman Bridge Repair
Subject : Estimated Quantities

Calcs : JWG **Date :** 05/14
Check : **Date :**

415- 1- 5 REINFORCING STEEL-SUBSTRUCTURE

	Volume concrete (cy)	Steel density* (lb/cy)	Steel (lb)
Reinforcing steel from spall repair	0.3	162	40.8
Reinforcing steel for wall void	2.2	200	444.4
			485.2

TOTAL WEIGHT: **486** **LB**

*Based on similar estimates

458- 1- 21 BRIDGE DECK EXPANSION JOINT, REHABILITATION,

	Number of joints	Width of bridge (ft)	Total length (ft)
Spans 1-3	4	26.300	105.200

TOTAL LENGTH: **105** **LF**

530- 1 RIPRAP, SAND-CEMENT

	Total Volume (CY)
Existing Undermining	87.4

TOTAL VOLUME: **88** **CY**

15.2 Widening Cost Estimate (904602)

CONSTRUCTION COST ESTIMATE

for

TRUMAN BRIDGE WIDENING

Bridge #904602

MONROE COUNTY, FLORIDA

Item Number	Item Description and		Estimated Quantity	Unit	Unit Price	Total Amount Per Item
TRUMAN BRIDGE #904602						
101- 1	MOBILIZATION	15%	1.0	LS		$47,483.34
102- 1	MAINTENANCE OF TRAFFIC (# DAYS)	15%	1.0	LS		$47,483.34
109- 71- 3	FIELD OFFICE		180.0	DA	$50.00	$9,000.00
	PERMITS		1.0	LS		$20,000.00
110- 1- 1	CLEARING & GRUBBING (ASSUME 5%)		1.1	LS	$3,370.41	$3,707.45
120- 1	REGULAR EXCAVATION		145.07	CY	$13.00	$1,885.87
120- 6	EMBANKMENT		26.67	CY	$32.00	$853.33
522- 1	SIDEWALK CONCRETE, 4" THICK		480.0	SY	$51.25	$24,600.00
527- 1	DETECTABLE WARNING ON EXISTING WALKING SURFACE, RETROFIT		1.0	EA	$750.00	$750.00
536- 8	GUARDRAIL BRIDGE ASSEMBLY		4.0	EA	$1,400.00	$5,600.00
536- 1- 1	GUARDRAIL - ROADWAY		520.0	LF	$21.00	$10,920.00
536- 1- 5	GUARDRAIL - ROADWAY, THRIE BEAM		175.0	LF	$30.00	$5,250.00
536- 73	GUARDRAIL REMOVAL		300.0	LF	$8.00	$2,400.00
536- 85- 22	GUARDRAIL END ANCHORAGE ASSEMBLY - FLARED		4.0	EA	$2,860.00	$11,440.00
570- 1- 2	PERFORMANCE TURF, SOD		800.0	SY	$3.90	$3,120.00
700- 20- 11	SINGLE POST SIGN, F&I, LESS THAN 12 SF		1.0	AS	$340.00	$340.00
700- 20- 60	SINGLE POST SIGN, REMOVE		1.0	AS	$13.64	$13.64
706- 3	RETRO-REFLECTIVE PAVEMENT MARKERS		4.0	EA	$3.20	$12.80
711- 11- 123	THERMOPLASTIC, STANDARD, WHITE, SOLID, 12"		60.0	LF	$2.55	$153.00
711- 11- 125	THERMOPLASTIC, STANDARD, WHITE, SOLID, 24"		12.0	LF	$5.80	$69.60
110- 3	REMOVAL OF EXISTING STRUCTURE		320.0	SF	$50.00	$16,000.00
400- 2- 4	CONCRETE CLASS II (SUPERSTRUCTURE)		27.3	CY	$1,500.00	$40,972.22
400- 4- 5	CONCRETE CLASS IV (SUBSTRUCTURE)		19.3	CY	$2,000.00	$38,630.81
400- 147	COMPOSITE NEOPRENE PADS		4.5	CF	$650.00	$2,925.00
415- 1- 4	REINFORCING STEEL (SUPERSTRUCTURE)		1760	LB	$1.00	$1,760.00
415- 1- 5	REINFORCING STEEL (SUBSTRUCTURE)		2600	LB	$1.10	$2,860.00
460- 2- 1	STRUCTURAL STEEL (CARBON)		26133	LB	$2.30	$60,106.67
521- 5- 4	CONCRETE TRAFFIC RAILING BARRIER (VERTICAL FACE)		160	LF	$150.00	$24,000.00
521- 6- 1	P/C DECORATIVE PEDESTRIAN RAILING		220	LF	$150.00	$33,000.00
	HELICAL PILES		12	EA	$2,000.00	$24,000.00
	RDWY REWORK WITHIN BRIDGE LIMITS (INCL. 3/4" FC-5, 3" ASPH CONC & OPT BASE 09)		12	SY	$100.00	$1,185.19
					CONTINGENCIES 20%	$88,104.45
					TOTAL	$528,627.00

15.3 Replacement Cost Estimate (904602)

V. ILL
7/14

FIB ALTERNATIVE

Bridge Development Report Cost Estimating

Effective 01/01/2014

Step One: Estimate Component Item

Utilizing the cost provided herein, develop the cost estimate for each bridge type under consideration.

A. Bridge Substructure

1. Prestressed Concrete Piling, (furnished and installed)

Size of Piling	Cost per Lin. Foot[1]	Quantity	Cost
18" (Driven Plumb or 1" Batter	$75	720	$54,000
18" (Driven Battered	$90		
24" (Driven Plumb or 1" Batter	$85		
24" (Driven Battered	$130		
30" (Driven Plumb or 1" Batter	$120		
30" (Driven Battered	$185		
Heavy mild steel reinforcing in pile head (each	$250		
		Subtotal	$54,000

1 When silica fume, metakaolin or ultrafine fly ash is used add $6/LF to the piling cost.

2. Steel Piling, (furnished and installed)

Size of Piling	Cost per Lin. Foot	Quantity	Cost
14 x 73 H Sectior	$70		
14 x 89 H Sectior	$90		
18" Pipe Pile	$95		
20" Pipe Pile	$110		
24" Pipe Pile	$140		
30" Pipe Pile	$160		
		Subtotal	

3. Drilled Shaft (Total in-place cost)

Dia. (on land, casing salvaged	Cost per Lin. Foot	Quantity	Cost
3 ft	$450		
4 ft	$550		
5 ft	$600		
6 ft	$680		
7 ft	$825		
8 ft	$1,550		
9 ft	$1,800		
Dia. (in water, casing salvaged	**Cost per Lin. Foot**	**Quantity**	**Cost**
3 ft	$500		
4 ft	$625		
5 ft	$700		
6 ft	$825		
7 ft	$950		
8 ft	$1,650		
9 ft	$1,900		
Dia. (in water, permanent casing	**Cost per Lin. Foot**	**Quantity**	**Cost**
3 ft	$625		
4 ft	$750		
5 ft	$850		
6 ft	$990		
7 ft	$1,250		
8 ft	$2,200		
9 ft	$2,400		
		Subtotal	

A. Bridge Substructure (continued)

4. Cofferdam Footing (Cofferdam and Seal Concrete)

Prorate the cost provided herein based on area and depth of water. A cofferdam footing having the following attributes cost $600,000: Area 63 ft x 37.25 ft; Depth of seal 5 ft; Depth of water over footing 16 ft

Type	Cost per Footing	Quantity	Cost
Cofferdam Footing			
		Subtotal	

1 Cost of seal concrete included in pay item 400-3-20 or 400-4-200.

5. Substructure Concrete

Type	Cost per Cubic Yard	Quantity	Cost
Bent Concrete[1]	$800	44.44	$35,552
Wall Concrete[1]	$800	251.85	$201,480
Seal Concrete[1]	$410		
Bulkhead Concrete[1]	$975		
Shell Fill[1]	$30		
Riprap	$800	25.69	$20,552
		Subtotal	$237,032

1 Admixtures: For Calcium Nitrite add $40/cy (@4.5 gal/cy) and for silica fume, metakaolin or ultrafine fly ash add $40/cy (@ 60 lb./cy)

6. Substructure Reinforcing and Post-tensioning Steel

Type	Cost per Pound	Quantity	Cost
Reinforcing Steel	$0.90	46,119	$41,507
Post-tensioning Steel, Stranc	$4		
Post-tensioning Steel, Bar:	$6		
		Subtotal	$41,507

Substructure Subtotal	$332,539

B. Walls

1. Retaining Walls

MSE Walls	Cost per Sq. Foot	Quantity	Cost
Permanent	$26		
Temporary	$14		
Sheet Pile Walls, Prestressed Concrete	**Cost per Lin. Foot**	**Quantity**	**Cost**
10" x 30"	$110		
12" x 30"	$120		
Sheet Pile Walls, Steel	**Cost per Sq. Foot**	**Quantity**	**Cost**
Permanent Cantilever Wal	$24		
Permanent Anchored Wall[1]	$50		
Temporary Cantilever Wal	$14		
Temporary Anchored Wall[1]	$35		
Traffic Railings with Junction Slabs	**Cost per Lin. Foot**	**Quantity**	**Cost**
32" F Shape or Vertical Face	$145		
42" F Shape or Vertical Face	$165		
		Subtotal	

1 Includes the cost of anchors, waler steel, miscellaneous steel for permanent/temporary walls and concrete face for permanent walls.

2. Noise Wall

Type	Cost per Sq. Foot	Quantity	Cost
Noise Wall	$25		
		Subtotal	

Walls Subtotal	

C. Bridge Superstructure

1. Bearing Type

Neoprene Bearing Pads	Cost per Cubic Foot	Quantity	Cost
Neoprene Bearing Pad:	$900	14.24	$12,816

Multirotational Bearings (Capacity in kips)	Cost per Each	Quantity	Cost
1- 250	$6,000		
251- 500	$7,000		
501- 750	$8,000		
751-1000	$9,500		
1001-1250	$9,900		
1251-1500	$10,000		
1501-1750	$11,000		
1751-2000	$12,500		
>2000	$15,000		
		Subtotal	$12,816

2. Bridge Girders

Structural Steel (includes coating)	Cost per Pound	Quantity	Cost
Rolled Wide Flange Sections, straigh[1]	$1.70		
Rolled Wide Flange Sections, curvec[1]	$1.85		
Plate Girders, Straight[1]	$1.70		
Plate Girders, Curved[1]	$1.90		
Box Girders, Straight[1]	$1.95		
Box Girders, Curved[1]	$2.05		
Prestressed Concrete Girders and Slab:	**Cost per Lin. Foot**	**Quantity**	**Cost**
Fl. Inverted Tee 16"[2]	$80		
Fl. Inverted Tee 20"	$90		
Fl. Inverted Tee 24"[2]	$105		
Fl. Tub (U-Beam) 48"[2]	$700		
Fl. Tub (U-Beam) 54"	$750		
Fl. Tub (U-Beam) 63"	$800		
Fl. Tub (U-Beam) 72"	$900		
Solid Flat Slab (<48"x12")	$150		
Solid Flat Slab (<48"x15")	$160		
Solid Flat Slab (48"x12")	$160		
Solid Flat Slab (48"x15")	$170		
Solid Flat Slab (60"x12")	$170		
Solid Flat Slab (60"x15"	$180		
AASHTO Type II Bean	$98		
Florida-I; 36[3]	$200	385	$77,000
Florida-I; 45[3]	$200		
Florida-I; 54[3]	$210		
Florida-I; 63[3]	$220		
Florida-I; 72[3]	$230		
Florida-I; 78[3]	$235		
Florida-I; 84[3]	$270		
Florida-I; 96[3]	$350		
Haunched Florida-I; 78	$700		
Haunched Florida-I; 84	$800		
		Subtotal	$77,000

1 When weathering steel (uncoated) is used, reduce the price by $0.04 pe pound. Inorganic zinc coating systems have an expected life cycle of 20 years.

2 Price is based on ability to furnish products without any conversions of casting beds and without purchasing forms. If these conditions do not exist, add the following cost: Inverted Tee - $202,000: Fl. Tub - $403,000

3 The prices of Florida-I Beams range in value from large quantity (low price) to small quantity (high price).

C. Bridge Superstructure (continued)

3. Cast-in-Place Superstructure Concrete			
Type	**Cost per Cubic Yard**	**Quantity**	**Cost**
Box Girder Concrete, Straigh	$950		
Box Girder Concrete, Curve	$1,100		
Deck Concrete	$750	109.65	$82,238
Precast Deck Overlay Concrete Class I	$600		
		Subtotal	$82,238

4. Concrete for Precast Segmental Box Girders, Cantilever Construction			
Concrete Cost by Deck Are	**Cost per Cubic Yard**	**Quantity**	**Cost**
≤ 300,000 SF	$1,250		
> 300,000 SF AND ≤ 500,000 SF	$1,200		
> 500,000 SF	$1,150		
		Subtotal	

5. Reinforcing and Post-Tensioning Stee			
Type	**Cost per Pound**	**Quantity**	**Cost**
Reinforcing Steel	$0.60	22,478	$13,487
Post-tensioning Steel, Strand; longitudina	$2.50		
Post-tensioning Steel, Strand; transvers	$4.00		
Post-tensioning Steel, Bar	$6.00		
		Subtotal	$13,487

6. Railings and Barriers			
Traffic Railings[1]	**Cost per Lin. Foot**	**Quantity**	**Cost**
32" F-Shape	$70		
32" F-Shape Mediar	$80		
42" F-Shape	$86		
32" Vertical Face	$90		
42" Vertical Face	$115		
32" Corral	$130		
Thrie Beam Retrofi	$140		
Thrie Beam Panel Retrofi	$110		
Vertical Face Retrofi	$100		
Pedestrian/Bicycle Railings:	**Cost per Lin. Foot**	**Quantity**	**Cost**
Decorative Concrete Railin	$150	274	$41,100
Single Bullet Railing[1]	$27		
Double Bullet Railing[1]	$36		
Triple Bullet Railing[1]	$45		
Picket Railing (42") steel (Type 1	$86		
Picket Railing (42") steel (Type 3	$200		
Panel/Picket Railing (42") aluminum (Type 1	$63		
Panel/Picket Railing (54") stee	$95		
Panel/Picket Railing (54") aluminum (Type 1	$80		
		Subtotal	$41,100

1 Combine cost of Bullet Railings with Concrete Parapet or Traffic Railing, as appropriate.

7. Expansion Joints

Type	Cost per Lin. Foot	Quantity	Cost
Strip Seal	$400		
Finger Joint <6'	$850		
Finger Joint >6'	$1,500		
Modular 6"	$500		
Modular 8"	$700		
Modular 12"	$900		
		Subtotal	

Superstructure Subtotal	$226,640

D. Miscellaneous Items

1. Bridge Deck Grooving and Planing

Type	Cost per Sq. Yard	Quantity	Cost
Grooving - Deck Thickness less than 8.5	$4.50		
Grooving and Planing- Deck Thickness 8.5"	$14	231	$3,234
		Grooving and Planing Subtotal	$3,234

2. Detour Bridges

Type	Cost per Sq. Foot	Quantity	Cost
Acrow Detour Bridge[1]	$55		
		Detour Bridge Subtotal	

1 Using FDOT supplied components. The cost i
for the bridge proper and does not include approach
work, surfacing, or guardrail.

3. Approach Slab

Approach Slab Material	Cost per Unit	Quantity	Cost
Cast-in-Place Concrete (per Sq. Yard)	$800	59.26	$47,408
Reinforcing Steel (per Pound	$1.00	2,798	$2,798
Railing Type per Superstructure Section (per Lin. Foot)			
		Approach Slab Subtotal	$50,206

Unadjusted Total	$612,620

Step Two: Estimate Conditional Variables and Cost per Square Foo

After developing the total cost estimate utilizing the unit cost, modify the cost to account for site condition variables. If appropriate, the cost will be modified by the following variables:

Conditional Variables	% Increase/ Decrease	Cost (+/-)
For construction over open water, floodplains that flood frequently or other similar areas, increase cost by 3 %.	3%	$18,379
Phased construction, increase by 20 %.[1]	20%	$122,524.05
Unit cost increase for work in Monroe County	40%	$245,048.10
Mobilization	15%	$91,893.04
Maintenance of Traffic	15%	$91,893.04
Approach Work/Utility Adjustment/Dem	20%	$122,524.05
	113%	$692,261

1 Phased construction is defined as construction over traffic or constructio requiring multiple phases to complete the construction of the entire cross section of the bridge. The 20 percent premium is applied to the affected units of the superstructure and/or substructure.

Substructure Subtotal	$332,539
Superstructure Subtotal	$226,640
Walls Subtotal	
Grooving and Planing Subtotal	$3,234
Detour Bridge Subtotal	
Approach Slab Subtotal	$50,206
Conditional Variables	$692,261
Total Cost	$1,304,881

Total Square Feet of Deck	3003
Cost per Square Foot (not including Approach Slab)	$316

Design Aid for Determination of Reinforcing Steel

In the absence of better information, use the following quantities of reinforcing steel pounds per cubic yard of concrete.

Location	Pounds of Steel per Cubic Yard	Cubic Yds.	Tot. Pounds
Pile Abutments	135	321.98	43,467
Pile Bents	145	18.29	2,652
Single Column Piers >25	210		
Single Column Piers <25	150		
Multiple Column Piers >25	215		
Multiple Column Piers <25	195		
Bascule Piers	110		
Standard Deck Slabs	205	109.65	22,478
Isotropic Deck Slabs	125		
Concrete Box Girders, Pier Se	225		
Concrete Box Girders, Typ. Se	165		
C.I.P. Flat Slabs @ 30ft & 15" Dee	220		
Approach Slab	200	13.99	2,798

Step Three: Cost Estimate Comparison to Historical Bridge Cost

The final step is a comparison of the cost estimate by comparison with historic bridge cost based on a cost per square foot. These total cost numbers are calculated exclusively for the bridge cost as defined in the General Section of this chapter. Price computed by Steps 1 and 2 should be generally within the range of cost as supplied herein. If the cost falls outside the provided range, good justification must be provided.

Bridge Superstructure Type	Total Cost per Square Foot Low	High
Short Span Bridges:		
Reinforced Concrete Flat Slab- Simple Span[1]	$115	$160
Pre-cast Concrete Slab - Simple Span[1]	$110	$200
Medium Span Bridges:		
Concrete Deck / Steel Girder - Simple Span[1]	$125	$142
Concrete Deck / Steel Girder - Continuous Span[1]	$135	$170
Concrete Deck / Prestressed Girder - Simple Span[1]	$90	$145
Concrete Deck / Prestressed Girder - Continuous Span[1]	$95	$211
Concrete Deck / Steel Box Girder[1] - Span range from 150' to 280' (for curvature, add 15% premium)	$140	$180
Segmental Concrete Box Girders - Cantilever Construction Span range from 150' to 280'	$140	$160
Movable Bridge - Bascule Spans & Piers	$1,800	$2,000
Demolition Costs:		
Typical	$35	$60
Bascule	$60	$70
Project Type		
Widening (Construction Only)	$85	$160

1 Increase the cost by twenty percent for phased construction

Estimated Cost per Square Foot $316

KISINGER CAMPO & ASSOCIATES
ENGINEERS • INSPECTORS • PLANNERS

JOB
DESCRIPTION TRUMAN BRIDGE MODIFIED FIB
COMPUTED BY JWG DATE 6/14
CHECKED BY JLL DATE 7/14
SHEET 1 OF 3

PILES

(6 / BENT) × (4 BENTS) = 24 PILES × 30 LF / PILE

= 720 LF

BENTS

40' wide × 2.5' high × 3' thick = 300 cf × 4 BENTS

= 1200 cf × $\frac{1}{27}$ = 44.44 cy

WALLS

ABUTMENTS ⇒ • 2 BREAST (FRONT) WALLS: 40' wide × 20' high × 1.5' thick = 1200 cf

2 walls × 1200 cf = $\frac{2400 \text{ cf}}{27}$ = 88.89 cy

• 4 Wing walls: 20' wide × 20' high × 1.5' thick = 600 cf

4 walls × 600 cf = $\frac{2400 \text{ cf}}{27}$ = 88.89 cy

INTERMEDIATE BENTS ⇒ 2 BENTS: [100' perimeter × 20' high × 0.5' thick] × 2

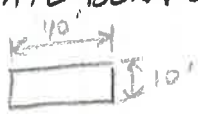

= $\frac{2000 \text{ cf}}{27}$ = 74.07 cy CONS. OK

TOTAL = 251.85 cy

KISINGER CAMPO & ASSOCIATES
ENGINEERS • INSPECTORS • PLANNERS

JOB _____ COMPUTED BY _____ DATE _____
DESCRIPTION _____ CHECKED BY JLL DATE 7/14
SHEET 2 OF 3

NEOPRENE PADS

(ASSUME TYPE C FOR MODERATE HEIGHT)

$2\frac{9}{16}'' = .2135'$

$.2135' \times \left(\frac{10}{12}'\right) \times (2.667') = (.4745 \text{ cf / pad}) \times 30 \text{ pads} = \underline{14.24 \text{ cf}}$

FIB-36

3 SPAN BRIDGE $\Rightarrow \frac{77'}{3} = 25.67' / \text{span}$

$(5 \text{ BEAMS / span})(3 \text{ spans}) \times (25.67') = \underline{\underline{385 \text{ LF}}}$

DECK CONCRETE

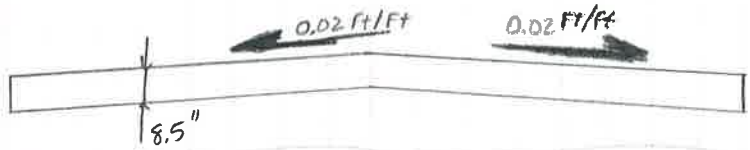

ROADWAY $\Rightarrow \left(\frac{8.5}{12}\right)' \times 39' \times 77'$
$= 2127.125 \text{ cf}$

SIDEWALK $\Rightarrow 2 \times [0.5' \times 6' \times (77' + 2(30))]$
$= 822 \text{ cf}$

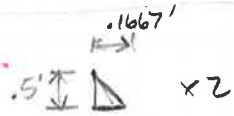

CURB $\Rightarrow \cancel{2} \cdot .1667' \times 0.5' \times (77 + 2(30)) \times \cancel{2}$
$= 11.417 \text{ cf}$

$\text{TOTAL} = \frac{2960.54 \text{ cf}}{27} = \underline{\underline{109.65 \text{ cy}}}$

KISINGER CAMPO & ASSOCIATES
ENGINEERS • INSPECTORS • PLANNERS

JOB _____ COMPUTED BY _____ DATE _____
DESCRIPTION _____ CHECKED BY JLL DATE 7/14
SHEET 3 OF 3

APPROACH SLABS

40' wide x 20' long = 800 SF x $\frac{1 \text{ sy}}{9 \text{ SF}}$ = 88.89 sy x 2 Slabs

= 177.78 sy

59.26 CY

GROOVING

77' x 27' = 2079 x $\frac{1}{9}$ = 231 sy

V: JLL
6/26/14

CONSPAN REPLACEMENT OPTION

Bridge Development Report Cost Estimating

Effective 01/01/2014

Step One: Estimate Component Item

Utilizing the cost provided herein, develop the cost estimate for each bridge type under consideration.

A. Bridge Substructure

1. Prestressed Concrete Piling, (furnished and installed)

Size of Piling	Cost per Lin. Foot[1]	Quantity	Cost
18" (Driven Plumb or 1" Batter	$75	720	$54,000
18" (Driven Battered	$90		
24" (Driven Plumb or 1" Batter	$85		
24" (Driven Battered	$130		
30" (Driven Plumb or 1" Batter	$120		
30" (Driven Battered	$185		
Heavy mild steel reinforcing in pile head (each	$250		
		Subtotal	$54,000

1 When silica fume, metakaolin or ultrafine fly ash is used add $6/LF to the piling cost.

2. Steel Piling, (furnished and installed)

Size of Piling	Cost per Lin. Foot	Quantity	Cost
14 x 73 H Sectior	$70		
14 x 89 H Sectior	$90		
18" Pipe Pile	$95		
20" Pipe Pile	$110		
24" Pipe Pile	$140		
30" Pipe Pile	$160		
		Subtotal	

3. Drilled Shaft (Total in-place cost)

Dia. (on land, casing salvaged	Cost per Lin. Foot	Quantity	Cost
3 ft	$450		
4 ft	$550		
5 ft	$600		
6 ft	$680		
7 ft	$825		
8 ft	$1,550		
9 ft	$1,800		
Dia. (in water, casing salvaged	**Cost per Lin. Foot**	**Quantity**	**Cost**
3 ft	$500		
4 ft	$625		
5 ft	$700		
6 ft	$825		
7 ft	$950		
8 ft	$1,650		
9 ft	$1,900		
Dia. (in water, permanent casing	**Cost per Lin. Foot**	**Quantity**	**Cost**
3 ft	$625		
4 ft	$750		
5 ft	$850		
6 ft	$990		
7 ft	$1,250		
8 ft	$2,200		
9 ft	$2,400		
		Subtotal	

A. Bridge Substructure (continued)

4. Cofferdam Footing (Cofferdam and Seal Concrete)

Prorate the cost provided herein based on area and depth of water. A cofferdam footing having the following attributes cost $600,000: Area 63 ft x 37.25 ft; Depth of seal 5 ft; Depth of water over footing 16 ft

Type	Cost per Footing	Quantity	Cost
Cofferdam Footing			
		Subtotal	

1 Cost of seal concrete included in pay item 400-3-20 or 400-4-200.

5. Substructure Concrete

Type	Cost per Cubic Yard	Quantity	Cost
Footing Concrete[1]	$800	168.89	$135,112
Seal Concrete[1]	$410		
Bulkhead Concrete[1]	$975		
Shell Fill[1]	$30		
Riprap	$650		
		Subtotal	$135,112

1 Admixtures: For Calcium Nitrite add $40/cy (@4.5 gal/cy) and for silica fume, metakaolin or ultrafine fly ash add $40/cy (@ 60 lb./cy)

6. Substructure Reinforcing and Post-tensioning Steel

Type	Cost per Pound	Quantity	Cost
Reinforcing Steel	$0.90	22,800	$20,520
Post-tensioning Steel, Strand	$4		
Post-tensioning Steel, Bars	$6		
		Subtotal	$20,520

Substructure Subtotal $209,632

B. Walls

1. Retaining Walls

MSE Walls	Cost per Sq. Foot	Quantity	Cost
Permanent	$26		
Temporary	$14		
Sheet Pile Walls, Prestressed Concrete	**Cost per Lin. Foot**	**Quantity**	**Cost**
10" x 30"	$110		
12" x 30"	$120		
Sheet Pile Walls, Steel	**Cost per Sq. Foot**	**Quantity**	**Cost**
Permanent Cantilever Wall	$24		
Permanent Anchored Wall[1]	$50		
Temporary Cantilever Wall	$14		
Temporary Anchored Wall[1]	$35		
Traffic Railings with Junction Slabs	**Cost per Lin. Foot**	**Quantity**	**Cost**
32" F Shape or Vertical Face	$145		
42" F Shape or Vertical Face	$165		
		Subtotal	

1 Includes the cost of anchors, waler steel, miscellaneous steel for permanent/temporary walls and concrete face for permanent walls.

2. Noise Wall

Type	Cost per Sq. Foot	Quantity	Cost
Noise Wall	$25		
		Subtotal	

Walls Subtotal

C. Bridge Superstructure

1. Bearing Type

Neoprene Bearing Pads	Cost per Cubic Foot	Quantity	Cost
Neoprene Bearing Pad	$900		
Multirotational Bearings (Capacity in kips	**Cost per Each**	**Quantity**	**Cost**
1- 250	$6,000		
251- 500	$7,000		
501- 750	$8,000		
751-1000	$9,500		
1001-1250	$9,900		
1251-1500	$10,000		
1501-1750	$11,000		
1751-2000	$12,500		
>2000	$15,000		
		Subtotal	

2. Bridge Girders

Structural Steel (includes coating)	Cost per Pound	Quantity	Cost
Rolled Wide Flange Sections, straigh[1]	$1.70		
Rolled Wide Flange Sections, curved[1]	$1.85		
Plate Girders, Straight[1]	$1.70		
Plate Girders, Curved[1]	$1.90		
Box Girders, Straight[1]	$1.95		
Box Girders, Curved[1]	$2.05		
Prestressed Concrete Girders and Slab	**Cost per Lin. Foot**	**Quantity**	**Cost**
Fl. Inverted Tee 16"[2]	$80		
Fl. Inverted Tee 20"	$90		
Fl. Inverted Tee 24"[2]	$105		
Fl. Tub (U-Beam) 48"[2]	$700		
Fl. Tub (U-Beam) 54"	$750		
Fl. Tub (U-Beam) 63"	$800		
Fl. Tub (U-Beam) 72"	$900		
Solid Flat Slab (<48"x12")	$150		
Solid Flat Slab (<48"x15")	$160		
Solid Flat Slab (48"x12")	$160		
Solid Flat Slab (48"x15")	$170		
Solid Flat Slab (60"x12")	$170		
Solid Flat Slab (60"x15"	$180		
AASHTO Type II Beam	$98		
Florida-I; 36[3]	$200		
Florida-I; 45[3]	$200		
Florida-I; 54[3]	$210		
Florida-I; 63[3]	$220		
Florida-I; 72[3]	$230		
Florida-I; 78[3]	$235		
Florida-I; 84[3]	$270		
Florida-I; 96[3]	$350		
Haunched Florida-I; 78	$700		
Haunched Florida-I; 84	$800		
		Subtotal	

1 When weathering steel (uncoated) is used, reduce the price by $0.04 per pound. Inorganic zinc coating systems have an expected life cycle of 20 years.

2 Price is based on ability to furnish products without any conversions of casting beds and without purchasing forms. If these conditions do not exist, add the following cost: Inverted Tee - $202,000: Fl. Tub - $403,000

3 The prices of Florida-I Beams range in value from large quantity (low price) to small quantity (high price).

C. Bridge Superstructure (continued)

3. Cast-in-Place Superstructure Concrete			
Type	**Cost per Cubic Yard**	**Quantity**	**Cost**
Box Girder Concrete, Straigh	$950		
Box Girder Concrete, Curve	$1,100		
Sidewalk & Curb Concret	$750	29.6	$22,200
Precast Deck Overlay Concrete Class I	$600		
		Subtotal	**$22,200**

4. Concrete for Precast Segmental Box Girders, Cantilever Construction			
Concrete Cost by Deck Are	**Cost per Cubic Yard**	**Quantity**	**Cost**
≤ 300,000 SF	$1,250		
> 300,000 SF AND ≤ 500,000 SF	$1,200		
> 500,000 SF	$1,150		
		Subtotal	

5. Reinforcing and Post-Tensioning Stee			
Type	**Cost per Pound**	**Quantity**	**Cost**
Reinforcing Steel	$0.60	6,068	$3,641
Post-tensioning Steel, Strand; longitudina	$2.50		
Post-tensioning Steel, Strand; transvers	$4.00		
Post-tensioning Steel, Bar	$6.00		
		Subtotal	**$3,641**

6. Railings and Barriers			
Traffic Railings[1]	**Cost per Lin. Foot**	**Quantity**	**Cost**
32" F-Shape	$70		
32" F-Shape Mediar	$80		
42" F-Shape	$86		
32" Vertical Face	$90		
42" Vertical Face	$115		
32" Corral	$130		
Thrie Beam Retrofi	$140		
Thrie Beam Panel Retrofi	$110		
Vertical Face Retrofi	$100		
Pedestrian/Bicycle Railings:	**Cost per Lin. Foot**	**Quantity**	**Cost**
Decorative Concrete Railin	$150	274	$41,100
Single Bullet Railing[1]	$27		
Double Bullet Railing[1]	$36		
Triple Bullet Railing[1]	$45		
Picket Railing (42") steel (Type 1	$86		
Picket Railing (42") steel (Type 3	$200		
Panel/Picket Railing (42") aluminum (Type 1	$63		
Panel/Picket Railing (54") stee	$95		
Panel/Picket Railing (54") aluminum (Type 1	$80		
		Subtotal	**$41,100**

1 Combine cost of Bullet Railings with Concrete Parapet or Traffic Railing, as appropriate.

7. Expansion Joints

Type	Cost per Lin. Foot	Quantity	Cost
Strip Seal	$400		
Finger Joint <6'	$850		
Finger Joint >6'	$1,500		
Modular 6"	$500		
Modular 8"	$700		
Modular 12"	$900		
		Subtotal	

Superstructure Subtotal **$66,941**

D. Miscellaneous Items

1. Bridge Deck Grooving and Planing

Type	Cost per Sq. Yard	Quantity	Cost
Grooving - Deck Thickness less than 8.5	$4.50		
Grooving and Planing- Deck Thickness 8.5"	$14		
		Grooving and Planing Subtotal	

2. Detour Bridges

Type	Cost per Sq. Foot	Quantity	Cost
Acrow Detour Bridge[1]	$55		
		Detour Bridge Subtotal	

1 Using FDOT supplied components. The cost is for the bridge proper and does not include approach work, surfacing, or guardrail.

3. Approach Slab

Approach Slab Material	Cost per Unit	Quantity	Cost
Cast-in-Place Concrete (per Sq. Yard)	$350		
Reinforcing Steel (per Pound	$0.60		
Railing Type per Superstructure Section (per Lin. Foot)			
		Approach Slab Subtotal	

4. Con/Span Arch and Walls

Con/Span Materials Estimate	Materials	Contingencies & Installation	Cost
Precast Arch	$398,000	50%	$597,000
		Con/Span Subtotal	$597,000

Unadjusted Total **$873,573**

Step Two: Estimate Conditional Variables and Cost per Square Foot

After developing the total cost estimate utilizing the unit cost, modify the cost to account for site condition variables. If appropriate, the cost will be modified by the following variables:

Conditional Variables & Misc.	% Increase/ Decrease	Cost (+/-)
For construction over open water, floodplains that flood frequently or other similar areas, increase cost by 3 %.	3%	$26,207.19
Phased construction, increase by 20 %.[1]	20%	$174,714.59
Mobilization	15%	$131,035.94
Maintenance of Traffic	15%	$131,035.94
Approach Work and Utility Adjustmen	15%	$131,035.94
	68%	$594,030

1 Phased construction is defined as construction over traffic or constructio requiring multiple phases to complete the construction of the entire cross section of the bridge. The 20 percent premium is applied to the affected units of the superstructure and/or substructure.

Substructure Subtotal	$209,632
Superstructure Subtotal	$66,941
Con/Span Arch and Walls Subtotal	$597,000
Walls Subtotal	
Grooving and Planing Subtotal	
Detour Bridge Subtotal	
Approach Slab Subtotal	
Conditional Variables & Misc	$594,030
Total Cost	$1,467,603

Total Square Feet of Deck	3003

Cost per Square Foot (not including Approach Slab)	$358

Design Aid for Determination of Reinforcing Steel

In the absence of better information, use the following quantities of reinforcing steel pounds per cubic yard of

Location	Pounds of Steel per Cubic Yard	Cubic Yds.	Tot. Pounds
Spread Footing	135	168.89	22,800
Pile Bents	145		
Single Column Piers >25	210		
Single Column Piers <25	150		
Multiple Column Piers >25	215		
Multiple Column Piers <25	195		
Bascule Piers	110		
Standard Deck Slabs	205	29.6	6,068
Isotropic Deck Slabs	125		
Concrete Box Girders, Pier Se	225		
Concrete Box Girders, Typ. Se	165		
C.I.P. Flat Slabs @ 30ft & 15" Dee	220		
Approach Slab	200		

Step Three: Cost Estimate Comparison to Historical Bridge Cost

The final step is a comparison of the cost estimate by comparison with historic bridge cost based on a cost per square foot.

Bridge Superstructure Type	Total Cost per Square Foot Low	High
Short Span Bridges:		
Reinforced Concrete Flat Slab- Simple Span[1]	$115	$160
Pre-cast Concrete Slab - Simple Span[1]	$110	$200
Medium Span Bridges:		
Concrete Deck / Steel Girder - Simple Span[1]	$125	$142
Concrete Deck / Steel Girder - Continuous Span[1]	$135	$170
Concrete Deck / Prestressed Girder - Simple Span[1]	$90	$145
Concrete Deck / Prestressed Girder - Continuous Span[1]	$95	$211
Concrete Deck / Steel Box Girder[1] - Span range from 150' to 280' (for curvature, add 15% premium)	$140	$180
Segmental Concrete Box Girders - Cantilever Construction Span range from 150' to 280'	$140	$160
Movable Bridge - Bascule Spans & Piers	$1,800	$2,000
Demolition Costs:		
Typical	$35	$60
Bascule	$60	$70
Project Type		
Widening (Construction Only)	$85	$160

1 Increase the cost by twenty percent for phased construction

Estimated Cost per Square Foot $358

KISINGER CAMPO & ASSOCIATES
ENGINEERS • INSPECTORS • PLANNERS

JOB
DESCRIPTION TRUMAN BRIDGE CON/SPAN

COMPUTED BY JWG DATE 6/14
CHECKED BY JLL DATE 6/26/14
SHEET 1 OF

FOOTING

5' x 3' spread @ face of each arch. ⇒ 40' x 6 = 240'

$5' \times 3' \times 240' = 3600 \text{ cf} \times \frac{1 \text{ cy}}{27 \text{ cf}} = 133.33 \text{ cy}$

3' x 2' spread @ wingwalls ⇒ 40' x 4 = 160'

$3' \times 2' \times 160' = 960 \text{ cf} \times \frac{1 \text{ cy}}{27 \text{ cf}} = 35.56 \text{ cy}$

+

= 168.89 cy

SIDEWALKS

LENGTH = Bridge Span + Approaches

= 77' + 2(30') = 137'

Width = 5' sidewalk + 1' under railing = 6'

Depth = 0.333'

Volume = 2(137' x 6' x 0.333')

$V = 548 \text{ cf} \times \frac{1 \text{ cy}}{27 \text{ cf}} = 20.30 \text{ cy}$

CURBS

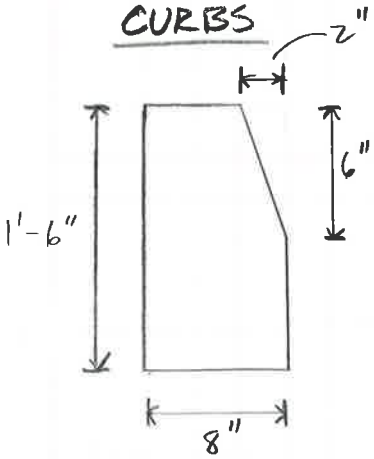

Volume

Area = □ - ◺ ⇒ 1.5' x 0.667' = 1 SF

0.1667' x 0.5' = 0.0833 SF

0.91667 SF

Length ⇒ 77' + 2(30') = 137'

$V = 2(L \times A) = 2(137' \times 0.91667 \text{ SF}) = 251.167 \text{ cf} \times \frac{1 \text{ cy}}{27 \text{ cf}} =$

9.30 cy

KISINGER CAMPO & ASSOCIATES

ENGINEERS • INSPECTORS • PLANNERS

JOB

DESCRIPTION

COMPUTED BY JWG DATE 6/14

CHECKED BY JLL DATE 6/26/14

SHEET 2 OF 2

DECORATIVE RAILING

LENGTH = Bridge Span + Approaches

= [77 + 2(30)] x 2 railings

= 274 LF

Cost/LF = $150

16.0 Bimini Drive (904603)

16.1 Repair Cost Estimate (904603)

CONSTRUCTION COST ESTIMATE

for

BIMINI DRIVE BRIDGE REPAIR

Bridge #904603

MONROE COUNTY, FLORIDA

Item Number	Item Description and		Estimated Quantity	Unit	Unit Price	Total Amount Per Item
BIMINI DRIVE #904603						
101- 1	MOBILIZATION	15%	1	LS		$13,147.99
102- 1	MAINTENANCE OF TRAFFIC (# DAYS)	15%	1	LS		$13,147.99
104- 11	FLOATING TURBIDITY BARRIER		216	LF	$15.00	$3,240.00
339- 1	MISCELLANEOUS ASPHALT PAVEMENT		1	TN	$241.58	$193.26
401- 70- 3	RESTORE SPALLED AREAS, LATEX MODIFIED MORTAR, ACRYLIC		60.2	CF	$558.33	$33,611.47
415- 1- 4	REINFORCING STEEL-SUPERSTRUCTURE		142	LB	$1.50	$213.00
415- 1- 5	REINFORCING STEEL-SUBSTRUCTURE		220	LB	$1.50	$330.00
458- 1- 21	BRIDGE DECK EXPANSION JOINT, REHABILITATION, POURED JOINT WITH BACKER ROD		52	LF	$120.00	$6,180.00
530- 1	RIPRAP, SAND-CEMENT		29	CY	$650.00	$18,850.00
530- 2	GUARDRAIL POST REPLACEMENT, REGULAR		1	EA	$100.00	$100.00
561- 1	COATING EXISTING STRUCTURAL STEEL		1	LS	3 Total @ $8000/T	$24,935.56
					CONTINGENCIES 20%	$22,789.85
					TOTAL	$136,739.13

* Pay Item 561- 1 includes the cost of painting the reinforcing steel plates along the beams of the span.

* Unit cost for Pay Item 561- 1 was increased to account for the additional cost of containment and access.

V. JLL 7/14

Kisinger Campo & Associates, Corp.

Allen Kisinger 1904-1981 — engineering · inspection · planning

Project : Bimini Drive Repair
Subject : Estimated Quantities

Calcs : JWG **Date :** 05/14
Check : JLL **Date :** 7/14

104- 11 FLOATING TURBIDITY BARRIER

Abutments

	Length (ft)	Width (ft)	Perimeter (ft)
Perimeter around abutments	26	4	
5 ft working zone around abutment	5	5	
Total barrier needed	36	9	54.00
Number of abutments			2
Layers of barrier around work area (double)			2

LENGTH: 216 LF

TOTAL LENGTH: 216 LF

339- 1 MISCELLANEOUS ASPHALT PAVEMENT

	Weight (TN)
Settlement	0.8
	0.8

TOTAL WEIGHT: 0.8 TN

401- 70- 3 RESTORE SPALLED AREAS, LATEX MODIFIED MORTAR- ACRYLIC

	Volume (cf)
Railing	3.6
Concrete Deck	6.0
Beams & Diaphragms	14.0
Abutments	36.6
	60.2

TOTAL VOLUME: 60.2 CF

415- 1- 4 REINFORCING STEEL-SUPERSTRUCTURE

	Volume concrete (cf)	Steel density* (lb/cf)	Steel (lb)
Reinforcing steel	23.6	6	141.6

TOTAL WEIGHT: 142 LB

*Based on similar estimates

Kisinger Campo & Associates, Corp.

Allen Kisinger 1904-1981 engineering • inspection • planning

Project : Bimini Drive Repair
Subject : Estimated Quantities

Calcs : JWG **Date :** 05/14
Check : JLL **Date :** 7/14

415- 1- 5 REINFORCING STEEL-SUBSTRUCTURE

	Volume concrete (cf)	Steel density* (lb/cf)	Steel (lb)
Reinforcing steel from spall repair	36.6	6	219.6
			219.6

TOTAL WEIGHT: 220 **LB**

*Based on similar estimates

458- 1- 21 BRIDGE DECK EXPANSION JOINT, REHABILITATION,

	Number of joints	Width of bridge (ft)	Total length (ft)
Span 1	2	25.750	51.500

TOTAL LENGTH: 52 **LF**

530- 1 RIPRAP, SAND-CEMENT

	Total Volume (CY)
Existing Undermining	28.6

TOTAL VOLUME: 29 **CY**

*Heavy vegetation growth in southwest slope protection

536-83-1 GUARDRAIL POST REPLACEMENT, REGULAR

Location	Number of posts
Post 6	1

TOTAL POSTS: 1 **EA**

Kisinger Campo & Associates, Corp.

Allen Kisinger 1904-1981 engineering · inspection · planning

Project : Bimini Drive Repair
Subject : Estimated Quantities

Calcs : JWG **Date :** 05/14
Check : JLL **Date :** 7/14

561- 1 **COATING EXISTING STRUCTURAL STEEL**

Structural Steel (Reinforcing Steel Plates)	Number	Length (ft)	Width (ft)	Height (ft)	Total Weight (ton)*
Bottom	4	40	0.8	0.0417	1.4
End	8	1.5	1.0	0.0417	0.1
Side	16	2.5	4	0.0417	1.6
					3.1

TOTAL WEIGHT: 3 **TN**

16.2 Widening Cost Estimate (904603)

CONSTRUCTION COST ESTIMATE

for

BIMINI DRIVE BRIDGE WIDENING

Bridge #904603

MONROE COUNTY, FLORIDA

Item Number	Item Description and		Estimated Quantity	Unit	Unit Price	Total Amount Per Item
BIMINI DRIVE #904603						
101- 1	MOBILIZATION	15%	1.0	LS		$34,292.97
102- 1	MAINTENANCE OF TRAFFIC (# DAYS)	15%	1.0	LS		$34,292.97
109- 71- 3	FIELD OFFICE		180.0	DA	$50.00	$9,000.00
	PERMITS		1.0	LS		$20,000.00
110- 1- 1	CLEARING & GRUBBING (ASSUME 5%)		1.1	LS	$3,370.41	$3,707.45
120- 1	REGULAR EXCAVATION		145.07	CY	$13.00	$1,885.87
120- 6	EMBANKMENT		26.67	CY	$32.00	$853.33
522- 1	SIDEWALK CONCRETE, 4" THICK		480.0	SY	$51.25	$24,600.00
527- 1	DETECTABLE WARNING ON EXISTING WALKING SURFACE, RETROFIT		1.0	EA	$750.00	$750.00
536- 8	GUARDRAIL BRIDGE ASSEMBLY		4.0	EA	$1,400.00	$5,600.00
536- 1- 1	GUARDRAIL - ROADWAY		520.0	LF	$21.00	$10,920.00
536- 1- 5	GUARDRAIL - ROADWAY, THRIE BEAM		175.0	LF	$30.00	$5,250.00
536- 73	GUARDRAIL REMOVAL		300.0	LF	$8.00	$2,400.00
536- 85- 22	GUARDRAIL END ANCHORAGE ASSEMBLY - FLARED		4.0	EA	$2,860.00	$11,440.00
570- 1- 2	PERFORMANCE TURF, SOD		800.0	SY	$3.90	$3,120.00
700- 20- 11	SINGLE POST SIGN, F&I, LESS THAN 12 SF		1.0	AS	$340.00	$340.00
700- 20- 60	SINGLE POST SIGN, REMOVE		1.0	AS	$13.64	$13.64
706- 3	RETRO-REFLECTIVE PAVEMENT MARKERS		4.0	EA	$3.20	$12.80
711- 11- 123	THERMOPLASTIC, STANDARD, WHITE, SOLID, 12"		60.0	LF	$2.55	$153.00
711- 11- 125	THERMOPLASTIC, STANDARD, WHITE, SOLID, 24"		12.0	LF	$5.80	$69.60
110- 3	REMOVAL OF EXISTING STRUCTURE		320.0	SF	$50.00	$16,000.00
400- 2- 4	CONCRETE CLASS II (SUPERSTRUCTURE)		15.3	CY	$1,500.00	$22,875.00
400- 4- 5	CONCRETE CLASS IV (SUBSTRUCTURE)		12.9	CY	$2,000.00	$25,760.00
400- 147	COMPOSITE NEOPRENE PADS		4.5	CF	$650.00	$2,925.00
415- 1- 4	REINFORCING STEEL (SUPERSTRUCTURE)		986	LB	$1.00	$986.37
415- 1- 5	REINFORCING STEEL (SUBSTRUCTURE)		1735	LB	$1.10	$1,908.64
460- 2- 1	STRUCTURAL STEEL (CARBON)		14593	LB	$2.30	$33,563.90
521- 5- 4	CONCRETE TRAFFIC RAILING BARRIER (VERTICAL FACE)		90	LF	$150.00	$13,500.00
521- 6- 1	P/C DECORATIVE PEDESTRIAN RAILING		152	LF	$150.00	$22,800.00
	HELICAL PILES		8	EA	$2,000.00	$16,000.00
	RDWY REWORK WITHIN BRIDGE LIMITS (INCL. 3/4" FC-5, 3" ASPH CONC & OPT BASE 09)		12	SY	$100.00	$1,185.19
					CONTINGENCIES 20%	$65,241.15
					TOTAL	$391,447.00

EXTRAPOLATED FROM TRUMAN BRIDGE WIDENING COST

G:\1201316 Monroe County On Call Eng Srvs\Structures\Task 1 - Bridge Inventory\904603\Cost Estimates\904603 Widening Cost.xlsx

V: JLL 7/1/4

16.3 Replacement Cost Estimate (904603)

J: JLL
7/14

FIB ALTERNATIVE

Bridge Development Report Cost Estimating

Effective 01/01/2014

Step One: Estimate Component Items

Utilizing the cost provided herein, develop the cost estimate for each bridge type under consideration.

A. Bridge Substructure

1. Prestressed Concrete Piling, (furnished and installed)

Size of Piling	Cost per Lin. Foot [1]	Quantity	Cost
18" (Driven Plumb or 1" Batter)	$75	360	$27,000
18" (Driven Battered)	$90		
24" (Driven Plumb or 1" Batter)	$85		
24" (Driven Battered)	$130		
30" (Driven Plumb or 1" Batter)	$120		
30" (Driven Battered)	$185		
Heavy mild steel reinforcing in pile head (each)	$250		
		Subtotal	$27,000

1 When silica fume, metakaolin or ultrafine fly ash is used add $6/LF to the piling cost.

2. Steel Piling, (furnished and installed)

Size of Piling	Cost per Lin. Foot	Quantity	Cost
14 x 73 H Section	$70		
14 x 89 H Section	$90		
18" Pipe Pile	$95		
20" Pipe Pile	$110		
24" Pipe Pile	$140		
30" Pipe Pile	$160		
		Subtotal	

3. Drilled Shaft (Total in-place cost)			
Dia. (on land, casing salvaged)	**Cost per Lin. Foot**	**Quantity**	**Cost**
3 ft	**$450**		
4 ft	**$550**		
5 ft	**$600**		
6 ft	**$680**		
7 ft	**$825**		
8 ft	**$1,550**		
9 ft	**$1,800**		
Dia. (in water, casing salvaged)	**Cost per Lin. Foot**	**Quantity**	**Cost**
3 ft	**$500**		
4 ft	**$625**		
5 ft	**$700**		
6 ft	**$825**		
7 ft	**$950**		
8 ft	**$1,650**		
9 ft	**$1,900**		
Dia. (in water, permanent casing)	**Cost per Lin. Foot**	**Quantity**	**Cost**
3 ft	**$625**		
4 ft	**$750**		
5 ft	**$850**		
6 ft	**$990**		
7 ft	**$1,250**		
8 ft	**$2,200**		
9 ft	**$2,400**		
		Subtotal	

A. Bridge Substructure (continued)

4. Cofferdam Footing (Cofferdam and Seal Concrete[1])			
Prorate the cost provided herein based on area and depth of water. A cofferdam footing having the following attributes cost $600,000: Area 63 ft x 37.25 ft; Depth of seal 5 ft; Depth of water over footing 16 ft			
Type	**Cost per Footing**	**Quantity**	**Cost**
Cofferdam Footing			
1 Cost of seal concrete included in pay item 400-3-20 or 400-4-200.		**Subtotal**	

5. Substructure Concrete			
Type	**Cost per Cubic Yard**	**Quantity**	**Cost**
End Bent Concrete [1]	**$800**	**22.22**	**$17,776**
Wall Concrete [1]	**$800**	**177.78**	**$142,224**
Seal Concrete [1]	**$410**		
Bulkhead Concrete [1]	**$975**		
Shell Fill [1]	**$30**		
Riprap	**$800**	**25.69**	**$20,552**
1 Admixtures: For Calcium Nitrite add $40/cy (@4.5 gal/cy) and for silica fume, metakaolin or ultrafine fly ash add $40/cy (@ 60 lb./cy)		**Subtotal**	$180,552

6. Substructure Reinforcing and Post-tensioning Steel			
Type	**Cost per Pound**	**Quantity**	**Cost**
Reinforcing Steel	$0.90	30,468	$27,421
Post-tensioning Steel, Strand	$4		
Post-tensioning Steel, Bars	$6		
		Subtotal	$27,421

Substructure Subtotal $234,973

B. Walls

1. Retaining Walls			
MSE Walls	**Cost per Sq. Foot**	**Quantity**	**Cost**
Permanent	$26		
Temporary	$14		
Sheet Pile Walls, Prestressed Concrete	**Cost per Lin. Foot**	**Quantity**	**Cost**
10" x 30"	$110		
12" x 30"	$120		
Sheet Pile Walls, Steel	**Cost per Sq. Foot**	**Quantity**	**Cost**
Permanent Cantilever Wall	$24		
Permanent Anchored Wall [1]	$50		
Temporary Cantilever Wall	$14		
Temporary Anchored Wall [1]	$35		
Traffic Railings with Junction Slabs	**Cost per Lin. Foot**	**Quantity**	**Cost**
32" F Shape or Vertical Face	$145		
42" F Shape or Vertical Face	$165		
		Subtotal	

1 Includes the cost of anchors, waler steel, miscellaneous steel for permanent/temporary walls and concrete face for permanent walls.

2. Noise Wall			
Type	**Cost per Sq. Foot**	**Quantity**	**Cost**
Noise Wall	$25		
		Subtotal	

Walls Subtotal

C. Bridge Superstructure

1. Bearing Type			
Neoprene Bearing Pads	**Cost per Cubic Foot**	**Quantity**	**Cost**
Neoprene Bearing Pads	$900	5.69	$5,121
Multirotational Bearings (Capacity in kips)	**Cost per Each**	**Quantity**	**Cost**
1- 250	$6,000		
251- 500	$7,000		
501- 750	$8,000		
751-1000	$9,500		
1001-1250	$9,900		
1251-1500	$10,000		
1501-1750	$11,000		
1751-2000	$12,500		
>2000	$15,000		
		Subtotal	$5,121

2. Bridge Girders

Structural Steel (includes coating)	Cost per Pound	Quantity	Cost
Rolled Wide Flange Sections, straight [1]	$1.70		
Rolled Wide Flange Sections, curved [1]	$1.85		
Plate Girders, Straight [1]	$1.70		
Plate Girders, Curved [1]	$1.90		
Box Girders, Straight [1]	$1.95		
Box Girders, Curved [1]	$2.05		
Prestressed Concrete Girders and Slabs	**Cost per Lin. Foot**	**Quantity**	**Cost**
Fl. Inverted Tee 16" [2]	$80		
Fl. Inverted Tee 20"	$90		
Fl. Inverted Tee 24" [2]	$105		
Fl. Tub (U-Beam) 48" [2]	$700		
Fl. Tub (U-Beam) 54"	$750		
Fl. Tub (U-Beam) 63"	$800		
Fl. Tub (U-Beam) 72"	$900		
Solid Flat Slab (<48"x12")	$150		
Solid Flat Slab (<48"x15")	$160		
Solid Flat Slab (48"x12")	$160		
Solid Flat Slab (48"x15")	$170		
Solid Flat Slab (60"x12")	$170		
Solid Flat Slab (60"x15")	$180		
AASHTO Type II Beam	$98		
Florida-I; 36 [3]	$200	215	$43,000
Florida-I; 45 [3]	$200		
Florida-I; 54 [3]	$210		
Florida-I; 63 [3]	$220		
Florida-I; 72 [3]	$230		
Florida-I; 78 [3]	$235		
Florida-I; 84 [3]	$270		
Florida-I; 96 [3]	$350		
Haunched Florida-I; 78	$700		
Haunched Florida-I; 84	$800		
		Subtotal	**$43,000**

1 When weathering steel (uncoated) is used, reduce the price by $0.04 per pound. Inorganic zinc coating systems have an expected life cycle of 20 years.

2 Price is based on ability to furnish products without any conversions of casting beds and without purchasing o forms. If these conditions do not exist, add the following cost: Inverted Tee - $202,000: Fl. Tub - $403,000

3 The prices of Florida-I Beams range in value from large quantity (low price) to small quantity (high price).

C. Bridge Superstructure (continued)

3. Cast-in-Place Superstructure Concrete			
Type	**Cost per Cubic Yard**	**Quantity**	**Cost**
Box Girder Concrete, Straight	$950		
Box Girder Concrete, Curved	$1,100		
Deck Concrete	$750	67.2	$50,400
Precast Deck Overlay Concrete Class IV	$600		
		Subtotal	$50,400

4. Concrete for Precast Segmental Box Girders, Cantilever Construction			
Concrete Cost by Deck Area	**Cost per Cubic Yard**	**Quantity**	**Cost**
≤ 300,000 SF	$1,250		
> 300,000 SF AND ≤ 500,000 SF	$1,200		
> 500,000 SF	$1,150		
		Subtotal	

5. Reinforcing and Post-Tensioning Steel			
Type	**Cost per Pound**	**Quantity**	**Cost**
Reinforcing Steel	$0.60	13,776	$8,266
Post-tensioning Steel, Strand; longitudinal	$2.50		
Post-tensioning Steel, Strand; transverse	$4.00		
Post-tensioning Steel, Bars	$6.00		
		Subtotal	$8,266

6. Railings and Barriers			
Traffic Railings [1]	**Cost per Lin. Foot**	**Quantity**	**Cost**
32" F-Shape	$70		
32" F-Shape Median	$80		
42" F-Shape	$86		
32" Vertical Face	$90		
42" Vertical Face	$115		
32" Corral	$130		
Thrie Beam Retrofit	$140		
Thrie Beam Panel Retrofit	$110		
Vertical Face Retrofit	$100		
Pedestrian/Bicycle Railings:	**Cost per Lin. Foot**	**Quantity**	**Cost**
Decorative Concrete Railing	$150	206	$30,900
Single Bullet Railing[1]	$27		
Double Bullet Railing[1]	$36		
Triple Bullet Railing[1]	$45		
Picket Railing (42") steel (Type 1)	$86		
Picket Railing (42") steel (Type 3)	$200		
Panel/Picket Railing (42") aluminum (Type 1)	$63		
Panel/Picket Railing (54") steel	$95		
Panel/Picket Railing (54") aluminum (Type 1)	$80		
		Subtotal	$30,900

1 Combine cost of Bullet Railings with Concrete Parapet or Traffic Railing, as appropriate.

7. Expansion Joints

Type	Cost per Lin. Foot	Quantity	Cost
Strip Seal	$400		
Finger Joint <6"	$850		
Finger Joint >6"	$1,500		
Modular 6"	$500		
Modular 8"	$700		
Modular 12"	$900		
		Subtotal	

Superstructure Subtotal $137,687

D. Miscellaneous Items

1. Bridge Deck Grooving and Planing

Type	Cost per Sq. Yard	Quantity	Cost
Grooving - Deck Thickness less than 8.5"	$4.50		
Grooving and Planing- Deck Thickness 8.5"+	$14	129	$1,806
		Grooving and Planing Subtotal	$1,806

2. Detour Bridges

Type	Cost per Sq. Foot	Quantity	Cost
Acrow Detour Bridge [1]	$55		
		Detour Bridge Subtotal	

1 Using FDOT supplied components. The cost is for the bridge proper and does not include approach work, surfacing, or guardrail.

3. Approach Slab

Approach Slab Material	Cost per Unit	Quantity	Cost
Cast-in-Place Concrete (per Sq. Yard)	$800	59.3	$47,440
Reinforcing Steel (per Pound)	$1.00	2,800	$2,800
Railing Type per Superstructure Section 6 (per Lin. Foot)			
		Approach Slab Subtotal	$50,240

Unadjusted Total $424,706

Step Two: Estimate Conditional Variables and Cost per Square Foot

After developing the total cost estimate utilizing the unit cost, modify the cost to account for site condition variables. If appropriate, the cost will be modified by the following variables:

Conditional Variables	% Increase/ Decrease	Cost (+/-)
For construction over open water, floodplains that flood frequently or other similar areas, increase cost by 3 %.	3%	$12,741
Phased construction, increase by 20 %. [1]	20%	$84,941.24
Unit cost increase for work in Monroe County	40%	$169,882.49
Mobilization	15%	$63,705.93
Maintenance of Traffic	15%	$63,705.93
Approach Work/Utility Adjustment/Demo	20%	$84,941.24
	113%	$479,918

1 Phased construction is defined as construction over traffic or construction requiring multiple phases to complete the construction of the entire cross section of the bridge. The 20 percent premium is applied to the affected units of the superstructure and/or substructure.

Substructure Subtotal	$234,973
Superstructure Subtotal	$137,687
Walls Subtotal	
Grooving and Planing Subtotal	$1,806
Detour Bridge Subtotal	
Approach Slab Subtotal	$50,240
Conditional Variables	$479,918
Total Cost	$904,624

Total Square Feet of Deck	1677

Cost per Square Foot (not including Approach Slab)	$383

Design Aid for Determination of Reinforcing Steel

In the absence of better information, use the following quantities of reinforcing steel pounds per cubic yard of

Location	Pounds of Steel per Cubic Yard	Cubic Yds.	Tot. Pounds
Pile Abutments	135	225.69	30,468
Pile Bents	145		
Single Column Piers >25'	210		
Single Column Piers <25'	150		
Multiple Column Piers >25'	215		
Multiple Column Piers <25'	195		
Bascule Piers	110		
Standard Deck Slabs	205	67.2	13,776
Isotropic Deck Slabs	125		
Concrete Box Girders, Pier Seg	225		
Concrete Box Girders, Typ. Seg	165		
C.I.P. Flat Slabs @ 30ft & 15" Deep	220		
Approach Slab	200	14.00	2,800

Step Three: Cost Estimate Comparison to Historical Bridge Cost

[redacted]

The final step is a comparison of the cost estimate by comparison with historic bridge cost based on a cost per square foot.

Bridge Superstructure Type	Total Cost per Square Foot Low	High
Short Span Bridges:		
Reinforced Concrete Flat Slab- Simple Span [1]	$115	$160
Pre-cast Concrete Slab - Simple Span [1]	$110	$200
Medium Span Bridges:		
Concrete Deck / Steel Girder - Simple Span [1]	$125	$142
Concrete Deck / Steel Girder - Continuous Span [1]	$135	$170
Concrete Deck / Prestressed Girder - Simple Span [1]	$90	$145
Concrete Deck / Prestressed Girder - Continuous Span [1]	$95	$211
Concrete Deck / Steel Box Girder [1] - Span range from 150' to 280' (for curvature, add 15% premium)	$140	$180
Segmental Concrete Box Girders - Cantilever Construction Span range from 150' to 280'	$140	$160
Movable Bridge - Bascule Spans & Piers	$1,800	$2,000
Demolition Costs:		
Typical	$35	$60
Bascule	$60	$70
Project Type		
Widening (Construction Only)	$85	$160

1 Increase the cost by twenty percent for phased construction

Estimated Cost per Square Foot $383

KISINGER CAMPO & ASSOCIATES
ENGINEERS • INSPECTORS • PLANNERS

JOB
DESCRIPTION BIMINI DRIVE MODIFIED FIB
COMPUTED BY JWG DATE 6/14
CHECKED BY JLL DATE 7/14
SHEET 1 OF

PILES

(6 /BENT) × (2 BENTS) = 12 PILES × 30 LF/PILE

= 360 LF

END BENTS

40' wide × 2.5' high × 3' thick = 300 cf × 2 BENTS

= 600 cf × $\frac{1}{27}$ = 22.22 cy

WALLS

- 2 BREAST WALLS : 40' wide × 20' high × 1.5' thick = 1200 cf

  2 walls × 1200 cf = $\frac{2400 \text{ cf}}{27}$ = 88.89 cy

- 4 wing WALLS : 20' wide × 20' high × 1.5' thick = 600 cf

  4 walls × 600 cf = $\frac{2400 \text{ cf}}{27}$ = 88.89 cy

TOTAL = 177.78 cy

NEOPRENE PADS

(ASSUME TYPE C FOR MODERATE HEIGHT)

$2\frac{9}{16}'' = .2135'$

$.2135' \times \left(\frac{10}{12}\right)' \times (2.667') = (.4745 \text{ cf / pad})(12 \text{ pads}) = 5.69 \text{ cf}$

KISINGER CAMPO & ASSOCIATES
ENGINEERS • INSPECTORS • PLANNERS

JOB _____ COMPUTED BY _____ DATE _____
DESCRIPTION _____ CHECKED BY JLL DATE 7/14
SHEET 2 OF 2

FIB - 36

1 SPAN BRIDGE ⇒ $\frac{43'}{1}$ = 43' / span

(5 BEAMS / SPAN)(1 SPAN) × 43' = 215 LF

DECK CONCRETE

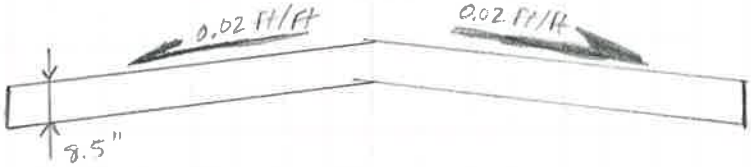

ROADWAY ⇒ $\left(\frac{8.5}{12}\right)' \times 39' \times 43'$

= 1187.875 cf

SIDEWALK ⇒ $2 \times [0.5' \times 6' \times (43 + 2(30))]$

= 618 cf

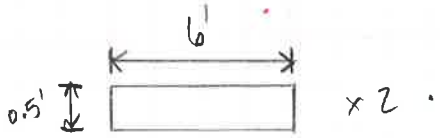

CURB ⇒ $2 \times [0.5' \times 0.1667' \times (43 + 2(30))] \times \frac{1}{2}$

= 8.583 cf

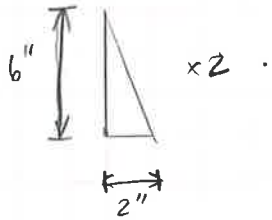

TOTAL = $\frac{1814.46 \text{ cf}}{27}$ = 67.20 cy

APPROACH SLABS

40' wide × 20' long = 800 SF × $\frac{1 \text{ sy}}{9 \text{ sf}}$ = 88.89 sy × 2 slabs

= 177.78 sy 59.3 CY

GROOVING

43' × 27' = 1161 sf × $\frac{1}{9}$ = 129 sy

J. SLL
6/26/14

CON SPAN REPLACEMENT OPTION

Bridge Development Report Cost Estimating

Effective 01/01/2014

Step One: Estimate Component Items

Utilizing the cost provided herein, develop the cost estimate for each bridge type under consideration.

A. Bridge Substructure

1. Prestressed Concrete Piling, (furnished and installed)

Size of Piling	Cost per Lin. Foot [1]	Quantity	Cost
18" (Driven Plumb or 1" Batter)	$75	360	$27,000
18" (Driven Battered)	$90		
24" (Driven Plumb or 1" Batter)	$85		
24" (Driven Battered)	$130		
30" (Driven Plumb or 1" Batter)	$120		
30" (Driven Battered)	$185		
Heavy mild steel reinforcing in pile head (each)	$250		
		Subtotal	$27,000

1 When silica fume, metakaolin or ultrafine fly ash is used add $6/LF to the piling cost.

2. Steel Piling, (furnished and installed)

Size of Piling	Cost per Lin. Foot	Quantity	Cost
14 x 73 H Section	$70		
14 x 89 H Section	$90		
18" Pipe Pile	$95		
20" Pipe Pile	$110		
24" Pipe Pile	$140		
30" Pipe Pile	$160		
		Subtotal	

3. Drilled Shaft (Total in-place cost)

Dia. (on land, casing salvaged)	Cost per Lin. Foot	Quantity	Cost
3 ft	$450		
4 ft	$550		
5 ft	$600		
6 ft	$680		
7 ft	$825		
8 ft	$1,550		
9 ft	$1,800		
Dia. (in water, casing salvaged)	**Cost per Lin. Foot**	**Quantity**	**Cost**
3 ft	$500		
4 ft	$625		
5 ft	$700		
6 ft	$825		
7 ft	$950		
8 ft	$1,650		
9 ft	$1,900		
Dia. (in water, permanent casing)	**Cost per Lin. Foot**	**Quantity**	**Cost**
3 ft	$625		
4 ft	$750		
5 ft	$850		
6 ft	$990		
7 ft	$1,250		
8 ft	$2,200		
9 ft	$2,400		
		Subtotal	

A. Bridge Substructure (continued)

4. Cofferdam Footing (Cofferdam and Seal Concrete [1])

Prorate the cost provided herein based on area and depth of water. A cofferdam footing having the following attributes cost $600,000: Area 63 ft x 37.25 ft; Depth of seal 5 ft; Depth of water over footing 16 ft

Type	Cost per Footing	Quantity	Cost
Cofferdam Footing			
		Subtotal	

1 Cost of seal concrete included in pay item 400-3-20 or 400-4-200.

5. Substructure Concrete

Type	Cost per Cubic Yard	Quantity	Cost
Footing Concrete [1]	$800	65.19	$52,152
Seal Concrete [1]	$410		
Bulkhead Concrete [1]	$975		
Shell Fill [1]	$30		
Riprap	$650		
		Subtotal	$52,152

1 Admixtures: For Calcium Nitrite add $40/cy (@4.5 gal/cy) and for silica fume, metakaolin or ultrafine fly ash add $40/cy (@ 60 lb./cy)

6. Substructure Reinforcing and Post-tensioning Steel

Type	Cost per Pound	Quantity	Cost
Reinforcing Steel	$0.90	8,801	$7,921
Post-tensioning Steel, Strand	$4		
Post-tensioning Steel, Bars	$6		
		Subtotal	$7,921

Substructure Subtotal **$87,073**

B. Walls

1. Retaining Walls

MSE Walls	Cost per Sq. Foot	Quantity	Cost
Permanent	$26		
Temporary	$14		
Sheet Pile Walls, Prestressed Concrete	**Cost per Lin. Foot**	**Quantity**	**Cost**
10" x 30"	$110		
12" x 30"	$120		
Sheet Pile Walls, Steel	**Cost per Sq. Foot**	**Quantity**	**Cost**
Permanent Cantilever Wall	$24		
Permanent Anchored Wall [1]	$50		
Temporary Cantilever Wall	$14		
Temporary Anchored Wall [1]	$35		
Traffic Railings with Junction Slabs	**Cost per Lin. Foot**	**Quantity**	**Cost**
32" F Shape or Vertical Face	$145		
42" F Shape or Vertical Face	$165		
		Subtotal	

1 Includes the cost of anchors, waler steel, miscellaneous steel for permanent/temporary walls and concrete face for permanent walls.

2. Noise Wall

Type	Cost per Sq. Foot	Quantity	Cost
Noise Wall	$25		
		Subtotal	

Walls Subtotal

C. Bridge Superstructure

1. Bearing Type			
Neoprene Bearing Pads	**Cost per Cubic Foot**	**Quantity**	**Cost**
Neoprene Bearing Pads	**$900**		
Multirotational Bearings (Capacity in kips)	**Cost per Each**	**Quantity**	**Cost**
1- 250	**$6,000**		
251- 500	**$7,000**		
501- 750	**$8,000**		
751-1000	**$9,500**		
1001-1250	**$9,900**		
1251-1500	**$10,000**		
1501-1750	**$11,000**		
1751-2000	**$12,500**		
>2000	**$15,000**		
		Subtotal	

2. Bridge Girders

Structural Steel (includes coating)	Cost per Pound	Quantity	Cost
Rolled Wide Flange Sections, straight [1]	$1.70		
Rolled Wide Flange Sections, curved [1]	$1.85		
Plate Girders, Straight [1]	$1.70		
Plate Girders, Curved [1]	$1.90		
Box Girders, Straight [1]	$1.95		
Box Girders, Curved [1]	$2.05		
Prestressed Concrete Girders and Slabs	**Cost per Lin. Foot**	**Quantity**	**Cost**
Fl. Inverted Tee 16" [2]	$80		
Fl. Inverted Tee 20"	$90		
Fl. Inverted Tee 24" [2]	$105		
Fl. Tub (U-Beam) 48" [2]	$700		
Fl. Tub (U-Beam) 54"	$750		
Fl. Tub (U-Beam) 63"	$800		
Fl. Tub (U-Beam) 72"	$900		
Solid Flat Slab (<48"x12")	$150		
Solid Flat Slab (<48"x15")	$160		
Solid Flat Slab (48"x12")	$160		
Solid Flat Slab (48"x15")	$170		
Solid Flat Slab (60"x12")	$170		
Solid Flat Slab (60"x15")	$180		
AASHTO Type II Beam	$98		
Florida-I; 36 [3]	$200		
Florida-I; 45 [3]	$200		
Florida-I; 54 [3]	$210		
Florida-I; 63 [3]	$220		
Florida-I; 72 [3]	$230		
Florida-I; 78 [3]	$235		
Florida-I; 84 [3]	$270		
Florida-I; 96 [3]	$350		
Haunched Florida-I; 78	$700		
Haunched Florida-I; 84	$800		
		Subtotal	

1 When weathering steel (uncoated) is used, reduce the price by $0.04 per pound. Inorganic zinc coating systems have an expected life cycle of 20

2 Price is based on ability to furnish products without any conversions of casting beds and without purchasing of forms. If these conditions do not exist, add the following cost: Inverted Tee - $202,000: Fl. Tub - $403,000

C. Bridge Superstructure (continued)

3. Cast-in-Place Superstructure Concrete

Type	Cost per Cubic Yard	Quantity	Cost
Box Girder Concrete, Straight	$950		
Box Girder Concrete, Curved	$1,100		
Sidewalk & Curb Concrete	$750	22.25	$16,688
Precast Deck Overlay Concrete Class IV	$600		
		Subtotal	$16,688

4. Concrete for Precast Segmental Box Girders, Cantilever Construction

Concrete Cost by Deck Area	Cost per Cubic Yard	Quantity	Cost
≤ 300,000 SF	$1,250		
> 300,000 SF AND ≤ 500,000 SF	$1,200		
> 500,000 SF	$1,150		
		Subtotal	

5. Reinforcing and Post-Tensioning Steel

Type	Cost per Pound	Quantity	Cost
Reinforcing Steel	$0.60	4,561	$2,737
Post-tensioning Steel, Strand; longitudinal	$2.50		
Post-tensioning Steel, Strand; transverse	$4.00		
Post-tensioning Steel, Bars	$6.00		
		Subtotal	$2,737

6. Railings and Barriers

Traffic Railings [1]	Cost per Lin. Foot	Quantity	Cost
32" F-Shape	$70		
32" F-Shape Median	$80		
42" F-Shape	$86		
32" Vertical Face	$90		
42" Vertical Face	$115		
32" Corral	$130		
Thrie Beam Retrofit	$140		
Thrie Beam Panel Retrofit	$110		
Vertical Face Retrofit	$100		
Pedestrian/Bicycle Railings:	**Cost per Lin. Foot**	**Quantity**	**Cost**
Decorative Concrete Railing	$150	206	$30,900
Single Bullet Railing [1]	$27		
Double Bullet Railing [1]	$36		
Triple Bullet Railing [1]	$45		
Picket Railing (42") steel (Type 1)	$86		
Picket Railing (42") steel (Type 3)	$200		
Panel/Picket Railing (42") aluminum (Type 1)	$63		
Panel/Picket Railing (54") steel	$95		
Panel/Picket Railing (54") aluminum (Type 1)	$80		
		Subtotal	$30,900

1 Combine cost of Bullet Railings with Concrete Parapet or Traffic Railing, as appropriate.

7. Expansion Joints

Type	Cost per Lin. Foot	Quantity	Cost
Strip Seal	$400		
Finger Joint <6"	$850		
Finger Joint >6"	$1,500		
Modular 6"	$500		
Modular 8"	$700		
Modular 12"	$900		
		Subtotal	

Superstructure Subtotal $50,324

D. Miscellaneous Items

1. Bridge Deck Grooving and Planing

Type	Cost per Sq. Yard	Quantity	Cost
Grooving - Deck Thickness less than 8.5"	$4.50		
Grooving and Planing- Deck Thickness 8.5"+	$14		
		Grooving and Planing Subtotal	

2. Detour Bridges

Type	Cost per Sq. Foot	Quantity	Cost
Acrow Detour Bridge [1]	$55		
		Detour Bridge Subtotal	

1 Using FDOT supplied components. The cost is for the bridge proper and does not include approach work, surfacing, or guardrail.

3. Approach Slab

Approach Slab Material	Cost per Unit	Quantity	Cost
Cast-in-Place Concrete (per Sq. Yard)	$350		
Reinforcing Steel (per Pound)	$0.60		
Railing Type per Superstructure Section 6 (per Lin. Foot)			
		Approach Slab Subtotal	

4. Con/Span Arch and Walls

Con/Span Materials Estimate	Materials	Contingencies & Installation	Cost
Precast Arch	$255,000	50%	$382,500
		Con/Span Subtotal	$382,500

Unadjusted Total $519,897

Step Two: Estimate Conditional Variables and Cost per Square Foot

After developing the total cost estimate utilizing the unit cost, modify the cost to account for site condition variables. If appropriate, the cost will be modified by the following variables:

Conditional Variables & Misc.	% Increase/ Decrease	Cost (+/-)
For construction over open water, floodplains that flood frequently or other similar areas, increase cost by 3 %.	3%	$15,597
Phased construction, increase by 20 %. [1]	20%	$103,979.37
Mobilization	15%	$77,984.53
Maintenance of Traffic	15%	$77,984.53
Approach Work and Utility Adjustment	15%	$77,984.53
	68%	$353,530

1 Phased construction is defined as construction over traffic or construction requiring multiple phases to complete the construction of the entire cross section of the bridge. The 20 percent premium is applied to the affected units of the superstructure and/or substructure.

Substructure Subtotal	$87,073
Superstructure Subtotal	$50,324
Con/Span Arch and Walls Subtotal	$382,500
Walls Subtotal	
Grooving and Planing Subtotal	
Detour Bridge Subtotal	
Approach Slab Subtotal	
Conditional Variables & Misc.	$353,530
Total Cost	$873,427

Total Square Feet of Deck	1677

Cost per Square Foot (not including Approach Slab)	$381

Design Aid for Determination of Reinforcing Steel

In the absence of better information, use the following quantities of reinforcing steel pounds per cubic yard of concrete.

Location	Pounds of Steel per Cubic Yard	Cubic Yds.	Tot. Pounds
Spread Footing	135	65.19	8,801
Pile Bents	145		
Single Column Piers >25'	210		
Single Column Piers <25'	150		
Multiple Column Piers >25'	215		
Multiple Column Piers <25'	195		
Bascule Piers	110		
Standard Deck Slabs	205	22.25	4,561
Isotropic Deck Slabs	125		
Concrete Box Girders, Pier Seg	225		
Concrete Box Girders, Typ. Seg	165		
C.I.P. Flat Slabs @ 30ft & 15" Deep	220		
Approach Slab	200		

Step Three: Cost Estimate Comparison to Historical Bridge Cost

The final step is a comparison of the cost estimate by comparison with historic bridge cost based on a cost per square foot.

Bridge Superstructure Type	Total Cost per Square Foot Low	High
Short Span Bridges:		
Reinforced Concrete Flat Slab- Simple Span [1]	$115	$160
Pre-cast Concrete Slab - Simple Span [1]	$110	$200
Medium Span Bridges:		
Concrete Deck / Steel Girder - Simple Span [1]	$125	$142
Concrete Deck / Steel Girder - Continuous Span [1]	$135	$170
Concrete Deck / Prestressed Girder - Simple Span [1]	$90	$145
Concrete Deck / Prestressed Girder - Continuous Span [1]	$95	$211
Concrete Deck / Steel Box Girder [1] - Span range from 150' to 280' (for curvature, add 15% premium)	$140	$180
Segmental Concrete Box Girders - Cantilever Construction Span range from 150' to 280'	$140	$160
Movable Bridge - Bascule Spans & Piers	$1,800	$2,000
Demolition Costs:		
Typical	$35	$60
Bascule	$60	$70
Project Type		
Widening (Construction Only)	$85	$160

1 Increase the cost by twenty percent for phased construction

Estimated Cost per Square Foot **$381**

KISINGER CAMPO & ASSOCIATES
ENGINEERS • INSPECTORS • PLANNERS

JOB
DESCRIPTION BIMINI DRIVE CON/SPAN
COMPUTED BY JWG DATE 6/14
CHECKED BY JLL DATE 6/26/14
SHEET 1 OF 2

5'x 2' spread footing ⇒ 80' (40' EF)
3'x 2' spread footing ⇒ 160' (40' ea. Wingwall)

Piles
6 x 2 ends = 12 piles x ~~15~~ 30 Ft = ~~900~~ 360 LF

$5 \times 2 \times 80 = 800 \text{ cf} \times \frac{1 \text{ cy}}{27 \text{ cf}} = 29.63 \text{ cy}$

$3 \times 2 \times 160 = 960 \text{ cf} \times \frac{1 \text{ cy}}{27 \text{ cf}} = +35.56 \text{ cy}$

Footing Conc. = 65.19 cy

Decorative Railing ⇒ LENGTH = Bridge Span + 2*Approaches
[43' + 2(30')] x 2 railings

Length = 206 LF

Cost per LF = $150

Sidewalks ⇒ LENGTH = Bridge Span + Approaches
= 43' + 2(30') = 103'

Depth = 0.333'
Width = 5' sidewalk + 1' under railing = 6'

Volume = 2[103' x 0.33' x 6'] = 413 cf x $\frac{1 \text{ cy}}{27 \text{ cf}}$ = 15.26 cy

KISINGER CAMPO & ASSOCIATES
ENGINEERS • INSPECTORS • PLANNERS

JOB _____ COMPUTED BY JWG DATE 6/14
DESCRIPTION _____ CHECKED BY JLL DATE 6/26/14
SHEET 2 OF 2

Curbs

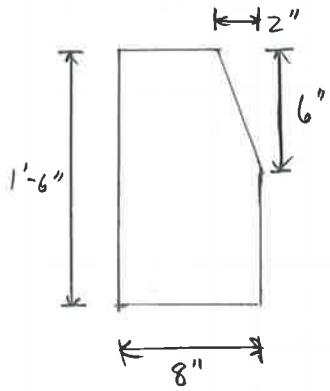

Volume

Area ⇒ ▯ − ▽ ⇒ 1.5' × 0.667' = 1 SF

0.1667' × 0.5' = −0.0833 SF

0.91667 SF

Length ⇒ 43' + 2(30') = 103'

$V = 2(L \times A) = 2(103 \times 0.91667)$

$V = 188.83\ cf \times \frac{1\ cy}{27\ cf} = 6.99\ cy$ BY INDEPENDENT CHECK

Rebar Calcs included in spreadsheet.

17.0 Harbor Drive (904604)

17.1 Repair Cost Estimate (904604)

CONSTRUCTION COST ESTIMATE

for

HARBOR DRIVE BRIDGE REPAIR

Bridge #904604

MONROE COUNTY, FLORIDA

Item Number	Item Description and		Estimated Quantity	Unit	Unit Price	Total Amount Per Item
HARBOR DRIVE #904604						
101- 1	MOBILIZATION	15%	1	LS		$42,191.46
102- 1	MAINTENANCE OF TRAFFIC (# DAYS)	15%	1	LS		$42,191.46
104- 11	FLOATING TURBIDITY BARRIER		220	LF	$15.00	$3,300.00
339- 1	MISCELLANEOUS ASPHALT PAVEMENT		1	TN	$241.58	$144.95
401- 70- 3	RESTORE SPALLED AREAS, LATEX MODIFIED MORTAR, ACRYLIC		358.8	CF	$558.33	$200,328.80
411- 1	EPOXY MATERIAL FOR CRACK INJECTION-STRUCTURES REHAB		9	GA	$145.00	$1,268.75
411- 1	(ASPHALT) EPOXY MATERIAL FOR CRACK INJECTION-STRUCTURES REHAB		4	GA	$145.00	$543.75
411- 2	CRACKS INJECT & SEAL-STRUCTURES REHAB		74	LF	$80.00	$5,920.00
411- 2	(ASPHALT) CRACKS INJECT & SEAL-STRUCTURES REHAB		27	LF	$80.00	$2,160.00
415- 1- 4	REINFORCING STEEL-SUPERSTRUCTURE		233	LB	$1.50	$349.50
415- 1- 5	REINFORCING STEEL-SUBSTRUCTURE		1920	LB	$1.50	$2,880.00
458- 1- 21	BRIDGE DECK EXPANSION JOINT, REHABILITATION, POURED JOINT WITH BACKER ROD		53	LF	$120.00	$6,384.00
530- 1	RIPRAP, SAND-CEMENT		45	CY	$650.00	$29,250.00
561- 1	COATING EXISTING STRUCTURAL STEEL		1	LS	4 Total @ $8000/T	$28,746.67
					CONTINGENCIES 20%	$73,131.87
					TOTAL	$438,791.21

* Pay Item 561- 1 includes the cost of painting the reinforcing steel plates along the beams of the span.

* Unit cost for Pay Item 561- 1 was increased to account for the additional cost of containment and access.

Kisinger Campo & Associates, Corp.

Allen Kisinger 1904-1981 — engineering • inspection • planning

Project : Harbor Drive Repair
Subject : Estimated Quantities

Calcs : JWG **Date :** 05/14
Check : JLL **Date :** 7/14

104- 11 FLOATING TURBIDITY BARRIER

Abutments

	Length (ft)	Width (ft)	Perimeter (ft)
Perimeter around abutments	27	4	
5 ft working zone around abutments	5	5	
Total barrier needed	37	9	55.00
Number of abutments			2
Layers of barrier around work area (double)			2

LENGTH: 220 LF

TOTAL LENGTH: 220 LF

339- 1 MISCELLANEOUS ASPHALT PAVEMENT

	Weight (TN)
Settlement	0.6
	0.6

TOTAL WEIGHT: 0.6 TN

401- 70- 3 RESTORE SPALLED AREAS, LATEX MODIFIED MORTAR- ACRYLIC

	Volume (cf)
Railing	7.6
Concrete Deck	6.2
Beams & Diaphragms	25.0
Retaining Walls	320.0
Abutments	0.0
	358.8

TOTAL VOLUME: 358.8 CF

411- 1 EPOXY MATERIAL FOR CRACK INJECTION-STRUCTURES REHAB

	Volume (Gal)
Railing	2.5
Concrete Deck	0.0
Beams & Diaphragms	0.0
Retaining Walls	3.8
Abutments	2.5
	8.8

TOTAL VOLUME: 9 GA

Kisinger Campo & Associates, Corp.

Allen Kisinger 1904-1981 engineering • inspection • planning

Project : Harbor Drive Repair
Subject : Estimated Quantities

Calcs : JWG **Date :** 05/14
Check : JLL **Date :** 7/14

411- 1 (ASPHALT) EPOXY MATERIAL FOR CRACK INJECTION-STRUCTURES REHAB

	Volume (Gal)
Asphalt	3.8
	3.8

TOTAL VOLUME: 4 GA

411- 2 CRACKS INJECT & SEAL-STRUCTURES REHAB

	Length (LF)
Railing	20.0
Concrete Deck	0.0
Beams & Diaphragms	4.0
Retaining Walls	30.0
Abutments	20.0
	74.0

TOTAL LENGTH: 74 LF

411- 2 (ASPHALT) CRACKS INJECT & SEAL-STRUCTURES REHAB

	Length (LF)
Asphalt	27.0
	27.0

TOTAL LENGTH: 27 LF

415- 1- 4 REINFORCING STEEL-SUPERSTRUCTURE

	Volume concrete (cf)	Steel density* (lb/cf)	Steel (lb)
Reinforcing steel	38.8	6	232.8

TOTAL WEIGHT: 233 LB

*Based on similar estimates

Kisinger Campo & Associates, Corp.

Allen Kisinger 1904-1981 engineering • inspection • planning

Project : Harbor Drive Repair
Subject : Estimated Quantities

Calcs : JWG **Date :** 05/14
Check : JLL **Date :** 7/14

415- 1- 5 REINFORCING STEEL-SUBSTRUCTURE

	Volume concrete (cf)	Steel density* (lb/cf)	Steel (lb)
Reinforcing steel from spall repair	320.0	6	1920.0
			1920.0

TOTAL WEIGHT: 1920 **LB**

*Based on similar estimates

458- 1- 21 BRIDGE DECK EXPANSION JOINT, REHABILITATION,

	Number of joints	Width of bridge (ft)	Total length (ft)
Span 1	2	26.600	53.200

TOTAL LENGTH: 53 **LF**

530- 1 RIPRAP, SAND-CEMENT

	Total Volume (CY)
Existing Undermining	44.4

TOTAL VOLUME: 45 **CY**

561- 1 COATING EXISTING STRUCTURAL STEEL

Structural Steel (Reinforcing Steel Plates)	Number	Length (ft)	Width (ft)	Height (ft)	Total Weight (ton)*
Bottom	4	54	0.8	0.0417	1.8
End	8	1.5	1.0	0.0417	0.1
Side	16	2.5	4	0.0417	1.6
					3.6

TOTAL WEIGHT: 4 **TN**

17.2 Widening Cost Estimate (904604)

CONSTRUCTION COST ESTIMATE

for

HARBOR DRIVE BRIDGE WIDENING

Bridge #904604

MONROE COUNTY, FLORIDA

Item Number	Item Description and		Estimated Quantity	Unit	Unit Price	Total Amount Per Item
HARBOR DRIVE #904604						
101- 1	MOBILIZATION	15%	1.0	LS		$37,992.27
102- 1	MAINTENANCE OF TRAFFIC (# DAYS)	15%	1.0	LS		$37,992.27
109- 71- 3	FIELD OFFICE		180.0	DA	$50.00	$9,000.00
	PERMITS		1.0	LS		$20,000.00
110- 1- 1	CLEARING & GRUBBING (ASSUME 5%)		1.1	LS	$3,370.41	$3,707.45
120- 1	REGULAR EXCAVATION		145.07	CY	$13.00	$1,885.87
120- 6	EMBANKMENT		26.67	CY	$32.00	$853.33
522- 1	SIDEWALK CONCRETE, 4" THICK		480.0	SY	$51.25	$24,600.00
527- 1	DETECTABLE WARNING ON EXISTING WALKING SURFACE, RETROFIT		1.0	EA	$750.00	$750.00
536- 8	GUARDRAIL BRIDGE ASSEMBLY		4.0	EA	$1,400.00	$5,600.00
536- 1- 1	GUARDRAIL - ROADWAY		520.0	LF	$21.00	$10,920.00
536- 1- 5	GUARDRAIL - ROADWAY, THRIE BEAM		175.0	LF	$30.00	$5,250.00
536- 73	GUARDRAIL REMOVAL		300.0	LF	$8.00	$2,400.00
536- 85- 22	GUARDRAIL END ANCHORAGE ASSEMBLY - FLARED		4.0	EA	$2,860.00	$11,440.00
570- 1- 2	PERFORMANCE TURF, SOD		800.0	SY	$3.90	$3,120.00
700- 20- 11	SINGLE POST SIGN, F&I, LESS THAN 12 SF		1.0	AS	$340.00	$340.00
700- 20- 60	SINGLE POST SIGN, REMOVE		1.0	AS	$13.64	$13.64
706- 3	RETRO-REFLECTIVE PAVEMENT MARKERS		4.0	EA	$3.20	$12.80
711- 11- 123	THERMOPLASTIC, STANDARD, WHITE, SOLID, 12"		60.0	LF	$2.55	$153.00
711- 11- 125	THERMOPLASTIC, STANDARD, WHITE, SOLID, 24"		12.0	LF	$5.80	$69.60
110- 3	REMOVAL OF EXISTING STRUCTURE		265.0	SF	$50.00	$13,250.00
400- 2- 4	CONCRETE CLASS II (SUPERSTRUCTURE)		20.2	CY	$1,500.00	$30,300.00
400- 4- 5	CONCRETE CLASS IV (SUBSTRUCTURE)		12.9	CY	$2,000.00	$25,800.00
400- 147	COMPOSITE NEOPRENE PADS		4.5	CF	$650.00	$2,925.00
415- 1- 4	REINFORCING STEEL (SUPERSTRUCTURE)		1303	LB	$1.00	$1,302.86
415- 1- 5	REINFORCING STEEL (SUBSTRUCTURE)		1735	LB	$1.10	$1,908.50
460- 2- 1	STRUCTURAL STEEL (CARBON)		19345	LB	$2.30	$44,494.54
521- 5- 4	CONCRETE TRAFFIC RAILING BARRIER (VERTICAL FACE)		120	LF	$150.00	$18,000.00
521- 6- 1	P/C DECORATIVE PEDESTRIAN RAILING		180	LF	$150.00	$27,000.00
	HELICAL PILES		8	EA	$2,000.00	$16,000.00
	RDWY REWORK WITHIN BRIDGE LIMITS (INCL. 3/4" FC-5, 3" ASPH CONC & OPT BASE 09)		12	SY	$100.00	$1,185.19
					CONTINGENCIES 20%	$71,653.26
					TOTAL	$429,920.00

17.3 Replacement Cost Estimate (904604)

V: JLL
7/14

FIB ALTERNATIVE

Bridge Development Report Cost Estimating

Effective 01/01/2014

Step One: Estimate Component Items

Utilizing the cost provided herein, develop the cost estimate for each bridge type under consideration.

A. Bridge Substructure

1. Prestressed Concrete Piling, (furnished and installed)

Size of Piling	Cost per Lin. Foot [1]	Quantity	Cost
18" (Driven Plumb or 1" Batter)	$75	420	$31,500
18" (Driven Battered)	$90		
24" (Driven Plumb or 1" Batter)	$85		
24" (Driven Battered)	$130		
30" (Driven Plumb or 1" Batter)	$120		
30" (Driven Battered)	$185		
Heavy mild steel reinforcing in pile head (each)	$250		
		Subtotal	$31,500

1 When silica fume, metakaolin or ultrafine fly ash is used add $6/LF to the piling cost.

2. Steel Piling, (furnished and installed)

Size of Piling	Cost per Lin. Foot	Quantity	Cost
14 x 73 H Section	$70		
14 x 89 H Section	$90		
18" Pipe Pile	$95		
20" Pipe Pile	$110		
24" Pipe Pile	$140		
30" Pipe Pile	$160		
		Subtotal	

3. Drilled Shaft (Total in-place cost)			
Dia. (on land, casing salvaged)	**Cost per Lin. Foot**	**Quantity**	**Cost**
3 ft	$450		
4 ft	$550		
5 ft	$600		
6 ft	$680		
7 ft	$825		
8 ft	$1,550		
9 ft	$1,800		
Dia. (in water, casing salvaged)	**Cost per Lin. Foot**	**Quantity**	**Cost**
3 ft	$500		
4 ft	$625		
5 ft	$700		
6 ft	$825		
7 ft	$950		
8 ft	$1,650		
9 ft	$1,900		
Dia. (in water, permanent casing)	**Cost per Lin. Foot**	**Quantity**	**Cost**
3 ft	$625		
4 ft	$750		
5 ft	$850		
6 ft	$990		
7 ft	$1,250		
8 ft	$2,200		
9 ft	$2,400		
		Subtotal	

A. Bridge Substructure (continued)

4. Cofferdam Footing (Cofferdam and Seal Concrete[1])			
Prorate the cost provided herein based on area and depth of water. A cofferdam footing having the following attributes cost $600,000: Area 63 ft x 37.25 ft; Depth of seal 5 ft; Depth of water over footing 16 ft			
Type	**Cost per Footing**	**Quantity**	**Cost**
Cofferdam Footing			
1 Cost of seal concrete included in pay item 400-3-20 or 400-4-200.		**Subtotal**	

5. Substructure Concrete			
Type	**Cost per Cubic Yard**	**Quantity**	**Cost**
End Bent Concrete [1]	$800	22.22	$17,776
Wall Concrete [1]	$800	177.78	$142,224
Seal Concrete [1]	$410		
Bulkhead Concrete [1]	$975		
Shell Fill [1]	$30		
Riprap	$800	25.69	$20,552
1 Admixtures: For Calcium Nitrite add $40/cy (@4.5 gal/cy) and for silica fume, metakaolin or ultrafine fly ash add $40/cy (@ 60 lb./cy)		**Subtotal**	$180,552

6. Substructure Reinforcing and Post-tensioning Steel			
Type	**Cost per Pound**	**Quantity**	**Cost**
Reinforcing Steel	$0.90	30,468	$27,421
Post-tensioning Steel, Strand	$4		
Post-tensioning Steel, Bars	$6		
		Subtotal	$27,421

Substructure Subtotal **$239,473**

B. Walls

1. Retaining Walls			
MSE Walls	**Cost per Sq. Foot**	**Quantity**	**Cost**
Permanent	$26		
Temporary	$14		
Sheet Pile Walls, Prestressed Concrete	**Cost per Lin. Foot**	**Quantity**	**Cost**
10" x 30"	$110		
12" x 30"	$120		
Sheet Pile Walls, Steel	**Cost per Sq. Foot**	**Quantity**	**Cost**
Permanent Cantilever Wall	$24		
Permanent Anchored Wall [1]	$50		
Temporary Cantilever Wall	$14		
Temporary Anchored Wall [1]	$35		
Traffic Railings with Junction Slabs	**Cost per Lin. Foot**	**Quantity**	**Cost**
32" F Shape or Vertical Face	$145		
42" F Shape or Vertical Face	$165		
		Subtotal	

1 Includes the cost of anchors, waler steel, miscellaneous steel for permanent/temporary walls and concrete face for permanent walls.

2. Noise Wall			
Type	**Cost per Sq. Foot**	**Quantity**	**Cost**
Noise Wall	$25		
		Subtotal	

Walls Subtotal

C. Bridge Superstructure

1. Bearing Type			
Neoprene Bearing Pads	**Cost per Cubic Foot**	**Quantity**	**Cost**
Neoprene Bearing Pads	$900	5.69	$5,121
Multirotational Bearings (Capacity in kips)	**Cost per Each**	**Quantity**	**Cost**
1- 250	$6,000		
251- 500	$7,000		
501- 750	$8,000		
751-1000	$9,500		
1001-1250	$9,900		
1251-1500	$10,000		
1501-1750	$11,000		
1751-2000	$12,500		
>2000	$15,000		
		Subtotal	$5,121

2. Bridge Girders

Structural Steel (includes coating)	Cost per Pound	Quantity	Cost
Rolled Wide Flange Sections, straight [1]	$1.70		
Rolled Wide Flange Sections, curved [1]	$1.85		
Plate Girders, Straight [1]	$1.70		
Plate Girders, Curved [1]	$1.90		
Box Girders, Straight [1]	$1.95		
Box Girders, Curved [1]	$2.05		
Prestressed Concrete Girders and Slabs	**Cost per Lin. Foot**	**Quantity**	**Cost**
Fl. Inverted Tee 16" [2]	$80		
Fl. Inverted Tee 20"	$90		
Fl. Inverted Tee 24" [2]	$105		
Fl. Tub (U-Beam) 48" [2]	$700		
Fl. Tub (U-Beam) 54"	$750		
Fl. Tub (U-Beam) 63"	$800		
Fl. Tub (U-Beam) 72"	$900		
Solid Flat Slab (<48"x12")	$150		
Solid Flat Slab (<48"x15")	$160		
Solid Flat Slab (48"x12")	$160		
Solid Flat Slab (48"x15")	$170		
Solid Flat Slab (60"x12")	$170		
Solid Flat Slab (60"x15")	$180		
AASHTO Type II Beam	$98		
Florida-I; 36 [3]	$200	336	$67,200
Florida-I; 45 [3]	$200		
Florida-I; 54 [3]	$210		
Florida-I; 63 [3]	$220		
Florida-I; 72 [3]	$230		
Florida-I; 78 [3]	$235		
Florida-I; 84 [3]	$270		
Florida-I; 96 [3]	$350		
Haunched Florida-I; 78	$700		
Haunched Florida-I; 84	$800		
		Subtotal	**$67,200**

1 When weathering steel (uncoated) is used, reduce the price by $0.04 per pound. Inorganic zinc coating systems have an expected life cycle of 20 years.

2 Price is based on ability to furnish products without any conversions of casting beds and without purchasing o forms. If these conditions do not exist, add the following cost: Inverted Tee - $202,000: Fl. Tub - $403,000

3 The prices of Florida-I Beams range in value from large quantity (low price) to small quantity (high price).

C. Bridge Superstructure (continued)

3. Cast-in-Place Superstructure Concrete

Type	Cost per Cubic Yard	Quantity	Cost
Box Girder Concrete, Straight	$950		
Box Girder Concrete, Curved	$1,100		
Deck Concrete	$750	87.51	$65,633
Precast Deck Overlay Concrete Class IV	$600		
		Subtotal	$65,633

4. Concrete for Precast Segmental Box Girders, Cantilever Construction

Concrete Cost by Deck Area	Cost per Cubic Yard	Quantity	Cost
≤ 300,000 SF	$1,250		
> 300,000 SF AND ≤ 500,000 SF	$1,200		
> 500,000 SF	$1,150		
		Subtotal	

5. Reinforcing and Post-Tensioning Steel

Type	Cost per Pound	Quantity	Cost
Reinforcing Steel	$0.60	17,940	$10,764
Post-tensioning Steel, Strand; longitudinal	$2.50		
Post-tensioning Steel, Strand; transverse	$4.00		
Post-tensioning Steel, Bars	$6.00		
		Subtotal	$10,764

6. Railings and Barriers

Traffic Railings [1]	Cost per Lin. Foot	Quantity	Cost
32" F-Shape	$70		
32" F-Shape Median	$80		
42" F-Shape	$86		
32" Vertical Face	$90		
42" Vertical Face	$115		
32" Corral	$130		
Thrie Beam Retrofit	$140		
Thrie Beam Panel Retrofit	$110		
Vertical Face Retrofit	$100		
Pedestrian/Bicycle Railings:	**Cost per Lin. Foot**	**Quantity**	**Cost**
Decorative Concrete Railing	$150	232	$34,800
Single Bullet Railing[1]	$27		
Double Bullet Railing[1]	$36		
Triple Bullet Railing[1]	$45		
Picket Railing (42") steel (Type 1)	$86		
Picket Railing (42") steel (Type 3)	$200		
Panel/Picket Railing (42") aluminum (Type 1)	$63		
Panel/Picket Railing (54") steel	$95		
Panel/Picket Railing (54") aluminum (Type 1)	$80		
		Subtotal	$34,800

1 Combine cost of Bullet Railings with Concrete Parapet or Traffic Railing, as appropriate.

7. Expansion Joints

Type	Cost per Lin. Foot	Quantity	Cost
Strip Seal	$400		
Finger Joint <6"	$850		
Finger Joint >6"	$1,500		
Modular 6"	$500		
Modular 8"	$700		
Modular 12"	$900		
		Subtotal	

Superstructure Subtotal **$183,517**

D. Miscellaneous Items

1. Bridge Deck Grooving and Planing

Type	Cost per Sq. Yard	Quantity	Cost
Grooving - Deck Thickness less than 8.5"	$4.50		
Grooving and Planing- Deck Thickness 8.5"+	$14	166	$2,324
		Grooving and Planing Subtotal	$2,324

2. Detour Bridges

Type	Cost per Sq. Foot	Quantity	Cost
Acrow Detour Bridge [1]	$55		
		Detour Bridge Subtotal	

1 Using FDOT supplied components. The cost is for the bridge proper and does not include approach work, surfacing, or guardrail.

3. Approach Slab

Approach Slab Material	Cost per Unit	Quantity	Cost
Cast-in-Place Concrete (per Sq. Yard)	$800	59.3	$47,440
Reinforcing Steel (per Pound)	$1.00	2,800	$2,800
Railing Type per Superstructure Section 6 (per Lin. Foot)			
		Approach Slab Subtotal	$50,240

Unadjusted Total **$475,555**

Step Two: Estimate Conditional Variables and Cost per Square Foot

After developing the total cost estimate utilizing the unit cost, modify the cost to account for site condition variables. If appropriate, the cost will be modified by the following variables:

Conditional Variables	% Increase/ Decrease	Cost (+/-)
For construction over open water, floodplains that flood frequently or other similar areas, increase cost by 3 %.	3%	$14,267
Phased construction, increase by 20 %. [1]	20%	$95,110.97
Unit cost increase for work in Monroe County	40%	$190,221.94
Mobilization	15%	$71,333.23
Maintenance of Traffic	15%	$71,333.23
Approach Work, Demo and Incidental Items	20%	$95,110.97
	113%	$537,377

1 Phased construction is defined as construction over traffic or construction requiring multiple phases to complete the construction of the entire cross section of the bridge. The 20 percent premium is applied to the affected units of the superstructure and/or substructure.

Substructure Subtotal	$239,473
Superstructure Subtotal	$183,517
Walls Subtotal	
Grooving and Planing Subtotal	$2,324
Detour Bridge Subtotal	
Approach Slab Subtotal	$50,240
Conditional Variables	$537,377
Total Cost	$1,012,932
Total Square Feet of Deck	2301
Cost per Square Foot (not including Approach Slab)	$315

Design Aid for Determination of Reinforcing Steel

In the absence of better information, use the following quantities of reinforcing steel pounds per cubic yard of

Location	Pounds of Steel per Cubic Yard	Cubic Yds.	Tot. Pounds
Pile Abutments	135	225.69	30,468
Pile Bents	145		
Single Column Piers >25'	210		
Single Column Piers <25'	150		
Multiple Column Piers >25'	215		
Multiple Column Piers <25'	195		
Bascule Piers	110		
Standard Deck Slabs	205	87.51	17,940
Isotropic Deck Slabs	125		
Concrete Box Girders, Pier Seg	225		
Concrete Box Girders, Typ. Seg	165		
C.I.P. Flat Slabs @ 30ft & 15" Deep	220		
Approach Slab	200	14.00	2,800

Step Three: Cost Estimate Comparison to Historical Bridge Cost

[redacted]

The final step is a comparison of the cost estimate by comparison with historic bridge cost based on a cost per square foot.

Bridge Superstructure Type	Total Cost per Square Foot Low	High
Short Span Bridges:		
Reinforced Concrete Flat Slab- Simple Span [1]	$115	$160
Pre-cast Concrete Slab - Simple Span [1]	$110	$200
Medium Span Bridges:		
Concrete Deck / Steel Girder - Simple Span [1]	$125	$142
Concrete Deck / Steel Girder - Continuous Span [1]	$135	$170
Concrete Deck / Prestressed Girder - Simple Span [1]	$90	$145
Concrete Deck / Prestressed Girder - Continuous Span [1]	$95	$211
Concrete Deck / Steel Box Girder [1] - Span range from 150' to 280' (for curvature, add 15% premium)	$140	$180
Segmental Concrete Box Girders - Cantilever Construction Span range from 150' to 280'	$140	$160
Movable Bridge - Bascule Spans & Piers	$1,800	$2,000
Demolition Costs:		
Typical	$35	$60
Bascule	$60	$70
Project Type		
Widening (Construction Only)	$85	$160

1 Increase the cost by twenty percent for phased construction

Estimated Cost per Square Foot $315

18.0 Seaview Drive (904606)

18.1 Repair Cost Estimate (904606)

CONSTRUCTION COST ESTIMATE

for

SEAVIEW DRIVE BRIDGE REPAIR

Bridge #904606

MONROE COUNTY, FLORIDA

Item Number	Item Description and		Estimated Quantity	Unit	Unit Price	Total Amount Per Item
SEAVIEW DRIVE #904606						
101- 1	MOBILIZATION	15%	1	LS		$10,020.52
102- 1	MAINTENANCE OF TRAFFIC (# DAYS)	15%	1	LS		$10,020.52
104- 11	FLOATING TURBIDITY BARRIER		220	LF	$15.00	$3,300.00
401- 70- 3	RESTORE SPALLED AREAS, LATEX MODIFIED MORTAR, ACRYLIC		18.8	CF	$558.33	$10,496.60
411- 1	EPOXY MATERIAL FOR CRACK INJECTION-STRUCTURES REHAB		3	GA	$144.00	$360.00
411- 1	(ASPHALT) EPOXY MATERIAL FOR CRACK INJECTION-STRUCTURES REHAB		10	GA	$145.00	$1,450.00
411- 2	CRACKS INJECT & SEAL-STRUCTURES REHAB		20	LF	$80.00	$1,600.00
411- 2	(ASPHALT) CRACKS INJECT & SEAL-STRUCTURES REHAB		73	LF	$80.00	$5,840.00
415- 1- 4	REINFORCING STEEL-SUPERSTRUCTURE		76	LB	$1.50	$114.00
415- 1- 5	REINFORCING STEEL-SUBSTRUCTURE		38	LB	$1.50	$57.00
458- 1- 21	BRIDGE DECK EXPANSION JOINT, REHABILITATION, POURED JOINT WITH BACKER ROD		52	LF	$120.00	$6,259.20
530- 1	RIPRAP, SAND-CEMENT		13	CY	$650.00	$8,580.00
561- 1	COATING EXISTING STRUCTURAL STEEL		1	LS	4 Total @ $8000/T	$28,746.67
					CONTINGENCIES 20%	$17,368.90
					TOTAL	$104,213.41

* Pay Item 561- 1 includes the cost of painting the reinforcing steel plates along the beams of the span.

* Unit cost for Pay Item 561- 1 was increased to account for the additional cost of containment and access.

V: JLL 7/14

Kisinger Campo & Associates, Corp.

Allan Kisinger 1904-1981 engineering • inspection • planning

Project : Seaview Drive Repair
Subject : Estimated Quantities

Calcs : JWG **Date :** 05/14
Check : JLL **Date :** 7/14

104- 11 FLOATING TURBIDITY BARRIER

Abutments

	Length (ft)	Width (ft)	Perimeter (ft)
Perimeter around abutment	27	4	
5 ft working zone around abutment	5	5	
Total barrier needed	37	9	55.00

Number of abutments	2
Layers of barrier around work area (double)	2

LENGTH: 220 LF

TOTAL LENGTH: 220 LF

401- 70- 3 RESTORE SPALLED AREAS, LATEX MODIFIED MORTAR- ACRYLIC

	Volume (cf)
Railing	4.0
Concrete Deck	4.2
Beams & Diaphragms	4.4
Footers	4.8
Abutments	1.4
	18.8

TOTAL VOLUME: 18.8 CF

411- 1 EPOXY MATERIAL FOR CRACK INJECTION-STRUCTURES REHAB

	Volume (Gal)
Railing	0.0
Concrete Deck	0.0
Beams & Diaphragms	2.5
Retaining Walls	0.0
Abutments	0.0
	2.5

TOTAL VOLUME: 3 GA

411- 1 (ASPHALT) EPOXY MATERIAL FOR CRACK INJECTION-STRUCTURES REHAB

	Volume (Gal)
Asphalt	10.0
	10.0

TOTAL VOLUME: 10 GA

Kisinger Campo & Associates, Corp.

Allen Kisinger 1904-1981 engineering · inspection · planning

Project : Seaview Drive Repair
Subject : Estimated Quantities

Calcs : JWG **Date :** 05/14
Check : JLL **Date :** 7/14

411- 2 CRACKS INJECT & SEAL-STRUCTURES REHAB

	Length (LF)
Railing	0.0
Concrete Deck	0.0
Beams & Diaphragms	20.0
Footers	0.0
Abutments	0.0
	20.0

TOTAL LENGTH: 20 LF

411- 2 (ASPHALT) CRACKS INJECT & SEAL-STRUCTURES REHAB

	Length (LF)
Asphalt	73.0
	73.0

TOTAL LENGTH: 73 LF

415- 1- 4 REINFORCING STEEL-SUPERSTRUCTURE

	Volume concrete (cf)	Steel density* (lb/cf)	Steel (lb)
Reinforcing steel	12.6	6	75.6

TOTAL WEIGHT: 76 LB

*Based on similar estimates

415- 1- 5 REINFORCING STEEL-SUBSTRUCTURE

	Volume concrete (cf)	Steel density* (lb/cf)	Steel (lb)
Reinforcing steel from spall repair	6.2	6	37.2
			37.2

TOTAL WEIGHT: 38 LB

*Based on similar estimates

Kisinger Campo & Associates, Corp.

Allen Kisinger 1904-1981 engineering • inspection • planning

Project : Seaview Drive Repair
Subject : Estimated Quantities

Calcs : JWG **Date :** 05/14
Check : JLL **Date :** 7/14

458- 1- 21 BRIDGE DECK EXPANSION JOINT, REHABILITATION,

	Number of joints	Width of bridge (ft)	Total length (ft)
Span 1	2	26.080	52.160

TOTAL LENGTH: 52 LF

530- 1 RIPRAP, SAND-CEMENT

	Total Volume (CY)
Existing Undermining	13.2
	13.2

TOTAL VOLUME: 13.2 CY

561- 1 COATING EXISTING STRUCTURAL STEEL

Structural Steel (Reinforcing Steel Plates)	Number	Length (ft)	Width (ft)	Height (ft)	Total Weight (ton)*
Bottom	4	54	0.8	0.0417	1.8
End	8	1.5	1.0	0.0417	0.1
Side	16	2.5	4	0.0417	1.6
					3.6

TOTAL WEIGHT: 4 TN

18.2 Widening Cost Estimate (904606)

CONSTRUCTION COST ESTIMATE

for

SEAVIEW DRIVE BRIDGE WIDENING

Bridge #904606

MONROE COUNTY, FLORIDA

Item Number	Item Description and		Estimated Quantity	Unit	Unit Price	Total Amount Per Item
SEAVIEW DRIVE #904606						
101- 1	MOBILIZATION	15%	1.0	LS		$37,992.27
102- 1	MAINTENANCE OF TRAFFIC (# DAYS)	15%	1.0	LS		$37,992.27
109- 71- 3	FIELD OFFICE		180.0	DA	$50.00	$9,000.00
	PERMITS		1.0	LS		$20,000.00
110- 1- 1	CLEARING & GRUBBING (ASSUME 5%)		1.1	LS	$3,370.41	$3,707.45
120- 1	REGULAR EXCAVATION		145.07	CY	$13.00	$1,885.87
120- 6	EMBANKMENT		26.67	CY	$32.00	$853.33
522- 1	SIDEWALK CONCRETE, 4" THICK		480.0	SY	$51.25	$24,600.00
527- 1	DETECTABLE WARNING ON EXISTING WALKING SURFACE, RETROFIT		1.0	EA	$750.00	$750.00
536- 8	GUARDRAIL BRIDGE ASSEMBLY		4.0	EA	$1,400.00	$5,600.00
536- 1- 1	GUARDRAIL - ROADWAY		520.0	LF	$21.00	$10,920.00
536- 1- 5	GUARDRAIL - ROADWAY, THRIE BEAM		175.0	LF	$30.00	$5,250.00
536- 73	GUARDRAIL REMOVAL		300.0	LF	$8.00	$2,400.00
536- 85- 22	GUARDRAIL END ANCHORAGE ASSEMBLY - FLARED		4.0	EA	$2,860.00	$11,440.00
570- 1- 2	PERFORMANCE TURF, SOD		800.0	SY	$3.90	$3,120.00
700- 20- 11	SINGLE POST SIGN, F&I, LESS THAN 12 SF		1.0	AS	$340.00	$340.00
700- 20- 60	SINGLE POST SIGN, REMOVE		1.0	AS	$13.64	$13.64
706- 3	RETRO-REFLECTIVE PAVEMENT MARKERS		4.0	EA	$3.20	$12.80
711- 11- 123	THERMOPLASTIC, STANDARD, WHITE, SOLID, 12"		60.0	LF	$2.55	$153.00
711- 11- 125	THERMOPLASTIC, STANDARD, WHITE, SOLID, 24"		12.0	LF	$5.80	$69.60
110- 3	REMOVAL OF EXISTING STRUCTURE		265.0	SF	$50.00	$13,250.00
400- 2- 4	CONCRETE CLASS II (SUPERSTRUCTURE)		20.2	CY	$1,500.00	$30,300.00
400- 4- 5	CONCRETE CLASS IV (SUBSTRUCTURE)		12.9	CY	$2,000.00	$25,800.00
400- 147	COMPOSITE NEOPRENE PADS		4.5	CF	$650.00	$2,925.00
415- 1- 4	REINFORCING STEEL (SUPERSTRUCTURE)		1303	LB	$1.00	$1,302.86
415- 1- 5	REINFORCING STEEL (SUBSTRUCTURE)		1735	LB	$1.10	$1,908.50
460- 2- 1	STRUCTURAL STEEL (CARBON)		19345	LB	$2.30	$44,494.54
521- 5- 4	CONCRETE TRAFFIC RAILING BARRIER (VERTICAL FACE)		120	LF	$150.00	$18,000.00
521- 6- 1	P/C DECORATIVE PEDESTRIAN RAILING		180	LF	$150.00	$27,000.00
	HELICAL PILES		8	EA	$2,000.00	$16,000.00
	RDWY REWORK WITHIN BRIDGE LIMITS (INCL. 3/4" FC-5, 3" ASPH CONC & OPT BASE 09)		12	SY	$100.00	$1,185.19
					CONTINGENCIES 20%	$71,653.26
					TOTAL	$429,920.00

V: JLL
7/14

18.3 Replacement Cost Estimate (904606)

✓: JLL 7/14

FIB ALTERNATIVE

Bridge Development Report Cost Estimating

Effective 01/01/2014

Step One: Estimate Component Items

Utilizing the cost provided herein, develop the cost estimate for each bridge type under consideration.

A. Bridge Substructure

1. Prestressed Concrete Piling, (furnished and installed)

Size of Piling	Cost per Lin. Foot [1]	Quantity	Cost
18" (Driven Plumb or 1" Batter)	$75	420	$31,500
18" (Driven Battered)	$90		
24" (Driven Plumb or 1" Batter)	$85		
24" (Driven Battered)	$130		
30" (Driven Plumb or 1" Batter)	$120		
30" (Driven Battered)	$185		
Heavy mild steel reinforcing in pile head (each)	$250		
		Subtotal	$31,500

1 When silica fume, metakaolin or ultrafine fly ash is used add $6/LF to the piling cost.

2. Steel Piling, (furnished and installed)

Size of Piling	Cost per Lin. Foot	Quantity	Cost
14 x 73 H Section	$70		
14 x 89 H Section	$90		
18" Pipe Pile	$95		
20" Pipe Pile	$110		
24" Pipe Pile	$140		
30" Pipe Pile	$160		
		Subtotal	

3. Drilled Shaft (Total in-place cost)			
Dia. (on land, casing salvaged)	**Cost per Lin. Foot**	**Quantity**	**Cost**
3 ft	$450		
4 ft	$550		
5 ft	$600		
6 ft	$680		
7 ft	$825		
8 ft	$1,550		
9 ft	$1,800		
Dia. (in water, casing salvaged)	**Cost per Lin. Foot**	**Quantity**	**Cost**
3 ft	$500		
4 ft	$625		
5 ft	$700		
6 ft	$825		
7 ft	$950		
8 ft	$1,650		
9 ft	$1,900		
Dia. (in water, permanent casing)	**Cost per Lin. Foot**	**Quantity**	**Cost**
3 ft	$625		
4 ft	$750		
5 ft	$850		
6 ft	$990		
7 ft	$1,250		
8 ft	$2,200		
9 ft	$2,400		
		Subtotal	

A. Bridge Substructure (continued)

4. Cofferdam Footing (Cofferdam and Seal Concrete[1])			
Prorate the cost provided herein based on area and depth of water. A cofferdam footing having the following attributes cost $600,000: Area 63 ft x 37.25 ft; Depth of seal 5 ft; Depth of water over footing 16 ft			
Type	**Cost per Footing**	**Quantity**	**Cost**
Cofferdam Footing			
1 Cost of seal concrete included in pay item 400-3-20 or 400-4-200.		**Subtotal**	

5. Substructure Concrete			
Type	**Cost per Cubic Yard**	**Quantity**	**Cost**
End Bent Concrete [1]	$800	22.22	$17,776
Wall Concrete [1]	$800	177.78	$142,224
Seal Concrete [1]	$410		
Bulkhead Concrete [1]	$975		
Shell Fill [1]	$30		
Riprap	$800	25.69	$20,552
1 Admixtures: For Calcium Nitrite add $40/cy (@4.5 gal/cy) and for silica fume, metakaolin or ultrafine fly ash add $40/cy (@ 60 lb./cy)		**Subtotal**	$180,552

6. Substructure Reinforcing and Post-tensioning Steel			
Type	**Cost per Pound**	**Quantity**	**Cost**
Reinforcing Steel	$0.90	30,468	$27,421
Post-tensioning Steel, Strand	$4		
Post-tensioning Steel, Bars	$6		
		Subtotal	$27,421

Substructure Subtotal $239,473

B. Walls

1. Retaining Walls			
MSE Walls	**Cost per Sq. Foot**	**Quantity**	**Cost**
Permanent	$26		
Temporary	$14		
Sheet Pile Walls, Prestressed Concrete	**Cost per Lin. Foot**	**Quantity**	**Cost**
10" x 30"	$110		
12" x 30"	$120		
Sheet Pile Walls, Steel	**Cost per Sq. Foot**	**Quantity**	**Cost**
Permanent Cantilever Wall	$24		
Permanent Anchored Wall [1]	$50		
Temporary Cantilever Wall	$14		
Temporary Anchored Wall [1]	$35		
Traffic Railings with Junction Slabs	**Cost per Lin. Foot**	**Quantity**	**Cost**
32" F Shape or Vertical Face	$145		
42" F Shape or Vertical Face	$165		
		Subtotal	

1 Includes the cost of anchors, waler steel, miscellaneous steel for permanent/temporary walls and concrete face for permanent walls.

2. Noise Wall			
Type	**Cost per Sq. Foot**	**Quantity**	**Cost**
Noise Wall	$25		
		Subtotal	

Walls Subtotal

C. Bridge Superstructure

1. Bearing Type			
Neoprene Bearing Pads	**Cost per Cubic Foot**	**Quantity**	**Cost**
Neoprene Bearing Pads	$900	5.69	$5,121
Multirotational Bearings (Capacity in kips)	**Cost per Each**	**Quantity**	**Cost**
1- 250	$6,000		
251- 500	$7,000		
501- 750	$8,000		
751-1000	$9,500		
1001-1250	$9,900		
1251-1500	$10,000		
1501-1750	$11,000		
1751-2000	$12,500		
>2000	$15,000		
		Subtotal	$5,121

2. Bridge Girders

Structural Steel (includes coating)	Cost per Pound	Quantity	Cost
Rolled Wide Flange Sections, straight [1]	$1.70		
Rolled Wide Flange Sections, curved [1]	$1.85		
Plate Girders, Straight [1]	$1.70		
Plate Girders, Curved [1]	$1.90		
Box Girders, Straight [1]	$1.95		
Box Girders, Curved [1]	$2.05		
Prestressed Concrete Girders and Slabs	**Cost per Lin. Foot**	**Quantity**	**Cost**
Fl. Inverted Tee 16" [2]	$80		
Fl. Inverted Tee 20"	$90		
Fl. Inverted Tee 24" [2]	$105		
Fl. Tub (U-Beam) 48" [2]	$700		
Fl. Tub (U-Beam) 54"	$750		
Fl. Tub (U-Beam) 63"	$800		
Fl. Tub (U-Beam) 72"	$900		
Solid Flat Slab (<48"x12")	$150		
Solid Flat Slab (<48"x15")	$160		
Solid Flat Slab (48"x12")	$160		
Solid Flat Slab (48"x15")	$170		
Solid Flat Slab (60"x12")	$170		
Solid Flat Slab (60"x15")	$180		
AASHTO Type II Beam	$98		
Florida-I; 36 [3]	$200	336	$67,200
Florida-I; 45 [3]	$200		
Florida-I; 54 [3]	$210		
Florida-I; 63 [3]	$220		
Florida-I; 72 [3]	$230		
Florida-I; 78 [3]	$235		
Florida-I; 84 [3]	$270		
Florida-I; 96 [3]	$350		
Haunched Florida-I; 78	$700		
Haunched Florida-I; 84	$800		
		Subtotal	**$67,200**

1 When weathering steel (uncoated) is used, reduce the price by $0.04 per pound. Inorganic zinc coating systems have an expected life cycle of 20 years.

2 Price is based on ability to furnish products without any conversions of casting beds and without purchasing o forms. If these conditions do not exist, add the following cost: Inverted Tee - $202,000: Fl. Tub - $403,000

3 The prices of Florida-I Beams range in value from large quantity (low price) to small quantity (high price).

C. Bridge Superstructure (continued)

3. Cast-in-Place Superstructure Concrete

Type	Cost per Cubic Yard	Quantity	Cost
Box Girder Concrete, Straight	$950		
Box Girder Concrete, Curved	$1,100		
Deck Concrete	$750	87.51	$65,633
Precast Deck Overlay Concrete Class IV	$600		
		Subtotal	$65,633

4. Concrete for Precast Segmental Box Girders, Cantilever Construction

Concrete Cost by Deck Area	Cost per Cubic Yard	Quantity	Cost
≤ 300,000 SF	$1,250		
> 300,000 SF AND ≤ 500,000 SF	$1,200		
> 500,000 SF	$1,150		
		Subtotal	

5. Reinforcing and Post-Tensioning Steel

Type	Cost per Pound	Quantity	Cost
Reinforcing Steel	$0.60	17,940	$10,764
Post-tensioning Steel, Strand; longitudinal	$2.50		
Post-tensioning Steel, Strand; transverse	$4.00		
Post-tensioning Steel, Bars	$6.00		
		Subtotal	$10,764

6. Railings and Barriers

Traffic Railings [1]	Cost per Lin. Foot	Quantity	Cost
32" F-Shape	$70		
32" F-Shape Median	$80		
42" F-Shape	$86		
32" Vertical Face	$90		
42" Vertical Face	$115		
32" Corral	$130		
Thrie Beam Retrofit	$140		
Thrie Beam Panel Retrofit	$110		
Vertical Face Retrofit	$100		
Pedestrian/Bicycle Railings:	**Cost per Lin. Foot**	**Quantity**	**Cost**
Decorative Concrete Railing	$150	232	$34,800
Single Bullet Railing[1]	$27		
Double Bullet Railing[1]	$36		
Triple Bullet Railing[1]	$45		
Picket Railing (42") steel (Type 1)	$86		
Picket Railing (42") steel (Type 3)	$200		
Panel/Picket Railing (42") aluminum (Type 1)	$63		
Panel/Picket Railing (54") steel	$95		
Panel/Picket Railing (54") aluminum (Type 1)	$80		
		Subtotal	$34,800

1 Combine cost of Bullet Railings with Concrete Parapet or Traffic Railing, as appropriate.

7. Expansion Joints

Type	Cost per Lin. Foot	Quantity	Cost
Strip Seal	$400		
Finger Joint <6"	$850		
Finger Joint >6"	$1,500		
Modular 6"	$500		
Modular 8"	$700		
Modular 12"	$900		
		Subtotal	

Superstructure Subtotal $183,517

D. Miscellaneous Items

1. Bridge Deck Grooving and Planing

Type	Cost per Sq. Yard	Quantity	Cost
Grooving - Deck Thickness less than 8.5"	$4.50		
Grooving and Planing- Deck Thickness 8.5"+	$14	166	$2,324
		Grooving and Planing Subtotal	$2,324

2. Detour Bridges

Type	Cost per Sq. Foot	Quantity	Cost
Acrow Detour Bridge [1]	$55		
		Detour Bridge Subtotal	

1 Using FDOT supplied components. The cost is for the bridge proper and does not include approach work, surfacing, or guardrail.

3. Approach Slab

Approach Slab Material	Cost per Unit	Quantity	Cost
Cast-in-Place Concrete (per Sq. Yard)	$800	59.3	$47,440
Reinforcing Steel (per Pound)	$1.00	2,800	$2,800
Railing Type per Superstructure Section 6 (per Lin. Foot)			
		Approach Slab Subtotal	$50,240

Unadjusted Total $475,555

Step Two: Estimate Conditional Variables and Cost per Square Foot

After developing the total cost estimate utilizing the unit cost, modify the cost to account for site condition variables. If appropriate, the cost will be modified by the following variables:

Conditional Variables	% Increase/ Decrease	Cost (+/-)
For construction over open water, floodplains that flood frequently or other similar areas, increase cost by 3 %.	3%	$14,267
Phased construction, increase by 20 %. [1]	20%	$95,110.97
Unit cost increase for work in Monroe County	40%	$190,221.94
Mobilization	15%	$71,333.23
Maintenance of Traffic	15%	$71,333.23
Approach Work, Demo and Incidental Items	20%	$95,110.97
	113%	$537,377

1 Phased construction is defined as construction over traffic or construction requiring multiple phases to complete the construction of the entire cross section of the bridge. The 20 percent premium is applied to the affected units of the superstructure and/or substructure.

Substructure Subtotal	$239,473
Superstructure Subtotal	$183,517
Walls Subtotal	
Grooving and Planing Subtotal	$2,324
Detour Bridge Subtotal	
Approach Slab Subtotal	$50,240
Conditional Variables	$537,377
Total Cost	$1,012,932
Total Square Feet of Deck	2301
Cost per Square Foot (not including Approach Slab)	$315

Design Aid for Determination of Reinforcing Steel

In the absence of better information, use the following quantities of reinforcing steel pounds per cubic yard of

Location	Pounds of Steel per Cubic Yard	Cubic Yds.	Tot. Pounds
Pile Abutments	135	225.69	30,468
Pile Bents	145		
Single Column Piers >25'	210		
Single Column Piers <25'	150		
Multiple Column Piers >25'	215		
Multiple Column Piers <25'	195		
Bascule Piers	110		
Standard Deck Slabs	205	87.51	17,940
Isotropic Deck Slabs	125		
Concrete Box Girders, Pier Seg	225		
Concrete Box Girders, Typ. Seg	165		
C.I.P. Flat Slabs @ 30ft & 15" Deep	220		
Approach Slab	200	14.00	2,800

Step Three: Cost Estimate Comparison to Historical Bridge Cost

[redacted]

The final step is a comparison of the cost estimate by comparison with historic bridge cost based on a cost per square foot.

Bridge Superstructure Type	Total Cost per Square Foot Low	High
Short Span Bridges:		
Reinforced Concrete Flat Slab- Simple Span [1]	$115	$160
Pre-cast Concrete Slab - Simple Span [1]	$110	$200
Medium Span Bridges:		
Concrete Deck / Steel Girder - Simple Span [1]	$125	$142
Concrete Deck / Steel Girder - Continuous Span [1]	$135	$170
Concrete Deck / Prestressed Girder - Simple Span [1]	$90	$145
Concrete Deck / Prestressed Girder - Continuous Span [1]	$95	$211
Concrete Deck / Steel Box Girder [1] - Span range from 150' to 280' (for curvature, add 15% premium)	$140	$180
Segmental Concrete Box Girders - Cantilever Construction Span range from 150' to 280'	$140	$160
Movable Bridge - Bascule Spans & Piers	$1,800	$2,000
Demolition Costs:		
Typical	$35	$60
Bascule	$60	$70
Project Type		
Widening (Construction Only)	$85	$160

1 Increase the cost by twenty percent for phased construction

Estimated Cost per Square Foot **$315**

19.0 Valois Boulevard (904908)

19.1 Repair Cost Estimate (904908)

CONSTRUCTION COST ESTIMATE

for

VALOIS BOULEVARD BRIDGE REPAIR

Bridge #904908

MONROE COUNTY, FLORIDA

Item Number	Item Description and		Estimated Quantity	Unit	Unit Price		Total Amount Per Item
VALOIS BOULEVARD #904908							
101- 1	MOBILIZATION	15%	1	LS			$12,467.34
102- 1	MAINTENANCE OF TRAFFIC (# DAYS)	15%	1	LS			$12,467.34
104- 11	FLOATING TURBIDITY BARRIER		232	LF	$15.00		$3,480.00
401- 70- 3	RESTORE SPALLED AREAS, LATEX MODIFIED MORTAR, ACRYLIC		11.6	CF	$558.33		$6,476.63
411- 1	(ASPHALT) EPOXY MATERIAL FOR CRACK INJECTION-STRUCTURES REHAB		53	GA	$145.00		$7,612.50
411- 2	(ASPHALT) CRACKS INJECT & SEAL-STRUCTURES REHAB		400	LF	$145.00		$58,000.00
415- 1- 4	REINFORCING STEEL-SUPERSTRUCTURE		69	LB	$1.50		$103.50
415- 1- 5	REINFORCING STEEL-SUBSTRUCTURE		2	LB	$1.50		$3.00
458- 1- 21	BRIDGE DECK EXPANSION JOINT, REHABILITATION, POURED JOINT WITH BACKER ROD		62	LF	$120.00		$7,440.00
					CONTINGENCIES	20%	$21,610.06
					TOTAL		$129,660.38

V: JLL 7/14

Kisinger Campo & Associates, Corp.

Allen Kisinger 1904-1981 engineering • inspection • planning

Project : Not Recorded Repair
Subject : Estimated Quantities

Calcs : JWG **Date :** 05/14
Check : JLL **Date :** 7/14

104- 11 FLOATING TURBIDITY BARRIER

Abutments

	Length (ft)	Width (ft)	Perimeter (ft)
Perimeter around abutment	30	4	
5 ft working zone around abutment	5	5	
Total barrier needed	40	9	58.00
Number of abutments			2
Layers of barrier around work area (double)			2

LENGTH: 232 LF

TOTAL LENGTH: 232 LF

401- 70- 3 RESTORE SPALLED AREAS, LATEX MODIFIED MORTAR- ACRYLIC

	Volume (cf)
Railing	1.4
Concrete Deck	10.0
Abutments	0.2
	11.6

TOTAL VOLUME: 11.6 CF

411- 1 (ASPHALT) EPOXY MATERIAL FOR CRACK INJECTION-STRUCTURES REHAB

	Volume (Gal)
Asphalt	52.5
	52.5

TOTAL VOLUME: 53 GA

411- 2 (ASPHALT) CRACKS INJECT & SEAL-STRUCTURES REHAB

	Length (LF)
Asphalt	400.0
	400.0

TOTAL LENGTH: 400 LF

Kisinger Campo & Associates, Corp.

Allen Kisinger 1904-1981 engineering · inspection · planning

Project : Not Recorded Repair
Subject : Estimated Quantities

Calcs : JWG **Date :** 05/14
Check : JLL **Date :** 7/14

415- 1- 4 REINFORCING STEEL-SUPERSTRUCTURE

	Volume concrete (cf)	Steel density* (lb/cf)	Steel (lb)
Reinforcing steel	11.4	6	68.4

TOTAL WEIGHT: 69 **LB**

*Based on similar estimates

415- 1- 5 REINFORCING STEEL-SUBSTRUCTURE

	Volume concrete (cf)	Steel density* (lb/cf)	Steel (lb)
Reinforcing steel from spall repair	0.2	6	1.2
			1.2

TOTAL WEIGHT: 2 **LB**

*Based on similar estimates

458- 1- 21 BRIDGE DECK EXPANSION JOINT, REHABILITATION,

	Number of joints	Width of bridge (ft)	Total length (ft)
Span 1	2	31.000	62.000

TOTAL LENGTH: 62 **LF**

19.2 Replacement Cost Estimate (904908)

CONSTRUCTION COST ESTIMATE

for

VALOIS BOULEVARD BRIDGE REPLACEMENT

Bridge #904908

MONROE COUNTY, FLORIDA

Replacement Cost is based on FDOT Historical Bridge Cost per square foot		
VALOIS BOULEVARD #904908		
Use cost for short simple span Prestressed Slab Unit Bridge		$160.00
Increase by 3% due to construction over open water	3%	4.80
Increase by 20% due to phased construction	20%	$32.00
Increase by 40% due to work in Monroe County	40%	$64.00

Cost per Square Foot	$260.80

Bridge Length (ft)	52.3
Bridge Width: 24'(Lanes)+4'(Shldr.)+5'(S/W) 1.08'+1.54'(Barriers) (ft)	36
Deck Area (sf)	1883
Bridge Cost	$491,034.24
Approach work, approach slab, and incidental items	$300,000.00

TOTAL	$791,034.24

V:KRG
7/14

20.0 Bahama Road (904910)

20.1 Repair Cost Estimate (904910)

CONSTRUCTION COST ESTIMATE

for

BAHAMA ROAD BRIDGE REPAIR

Bridge #904910

MONROE COUNTY, FLORIDA

Item Number	Item Description and		Estimated Quantity	Unit	Unit Price	Total Amount Per Item
BAHAMA ROAD #904910						
101- 1	MOBILIZATION	15%	1	LS		$7,353.77
102- 1	MAINTENANCE OF TRAFFIC (# DAYS)	15%	1	LS		$7,353.77
401- 70- 3	RESTORE SPALLED AREAS, LATEX MODIFIED MORTAR, ACRYLIC		65.8	CF	$558.33	$36,738.11
411- 1	EPOXY MATERIAL FOR CRACK INJECTION-STRUCTURES REHAB		9	GA	$145.00	$1,268.75
411- 1	(ASPHALT) EPOXY MATERIAL FOR CRACK INJECTION-STRUCTURES REHAB		5	GA	$145.00	$725.00
411- 2	CRACKS INJECT & SEAL-STRUCTURES REHAB		68	LF	$80.00	$5,440.00
411- 2	(ASPHALT) CRACKS INJECT & SEAL-STRUCTURES REHAB		40	LF	$80.00	$3,200.00
413-151	METHACRYLATE MONOMER		5	GA	$123.00	$590.40
413-154	CLEANING AND SEALING CONCRETE SURFACES: PENETRANT SEALER OR METHACRYLATES		480	SF	$0.98	$470.40
415- 1- 4	REINFORCING STEEL-SUPERSTRUCTURE		395	LB	$1.50	$592.50
					CONTINGENCIES 20%	$12,746.54
					TOTAL	$76,479.26

Kisinger Campo & Associates, Corp.

Allen Kisinger 1904-1981 engineering • inspection • planning

Project : Bahama Drive Repair
Subject : Estimated Quantities

Calcs : JWG **Date :** 05/14
Check : [illegible] **Date :** 7/14

401- 70- 3 RESTORE SPALLED AREAS, LATEX MODIFIED MORTAR- ACRYLIC

	Volume (cf)
Concrete Deck	0.4
Beams & Diaphragms	65.4
	65.8

TOTAL VOLUME: 65.8 CF

411- 1 EPOXY MATERIAL FOR CRACK INJECTION-STRUCTURES REHAB

	Volume (Gal)
Concrete Deck	8.8
Beams & Diaphragms	0.0
	8.8

TOTAL VOLUME: 9 GA

411- 1 (ASPHALT) EPOXY MATERIAL FOR CRACK INJECTION-STRUCTURES REHAB

	Volume (Gal)
Asphalt	5.0
	5.0

TOTAL VOLUME: 5 GA

411- 2 CRACKS INJECT & SEAL-STRUCTURES REHAB

	Length (LF)
Concrete Deck	68.0
Beams & Diaphragms	0.0
	68.0

TOTAL LENGTH: 68 LF

Kisinger Campo & Associates, Corp.

Allen Kisinger 1904-1981 engineering • inspection • planning

Project : Bahama Drive Repair
Subject : Estimated Quantities

Calcs : JWG **Date :** 05/14
Check : JLL **Date :** 7/14

411- 2 (ASPHALT) CRACKS INJECT & SEAL-STRUCTURES REHAB

	Length (LF)
Asphalt	40.0
	40.0

TOTAL LENGTH: 40 LF

413-151 METHACRYLATE MONOMER

Location	Width (ft)	Span (ft)	Surface area (SF)
Existing Deck	20.00	24.00	480.0
			480.0

	Volume (GA)
100 SF / GA	**4.8**

TOTAL AREA: 5 GA

413-154 CLEANING AND SEALING CONCRETE SURFACES: PENETRANT SEALER OR

Location	Width (ft)	Span (ft)	Surface area (SF)
Existing Deck	20.00	24.00	480.0
			480.0

TOTAL AREA: 480.0 SF

Kisinger Campo & Associates, Corp.

Allan Kisinger 1904-1991 engineering • inspection • planning

Project : Bahama Drive Repair
Subject : Estimated Quantities

Calcs : JWG **Date :** 05/14
Check : JLL **Date :** 7/14

415- 1- 4 **REINFORCING STEEL-SUPERSTRUCTURE**

	Volume concrete (cf)	Steel density* (lb/cf)	Steel (lb)
Reinforcing steel	65.8	6	394.8

TOTAL WEIGHT: 395 **LB**

*Based on similar estimates

20.2 Replacement Cost Estimate (904910)

CONSTRUCTION COST ESTIMATE

for

BAHAMA ROAD BRIDGE REPLACEMENT

Bridge #904910

MONROE COUNTY, FLORIDA

Replacement Cost is based on FDOT Historical Bridge Cost per square foot

BAHAMA ROAD #904910

Use cost for short simple span Prestressed Slab Unit Bridge		$160.00
Increase by 3% due to construction over open water	3%	4.80
Increase by 20% due to phased construction	20%	$32.00
Increase by 40% due to work in Monroe County	40%	$64.00

Cost per Square Foot $260.80

Bridge Length (ft)	24
Bridge Width: 24'(Lanes)+4'(Shldr.)+5'(S/W) 1.08'+1.54'(Barriers) (ft)	36
Deck Area (sf)	864
Bridge Cost	$225,331.20
Approach work, approach slab, and incidental items	$300,000.00

TOTAL $525,331.20

21.0 Steam Boat Creek (904980)

21.1 Repair Cost Estimate (904980)

CONSTRUCTION COST ESTIMATE

for

STEAM BOAT CREEK BRIDGE REPAIR

Bridge #904980

MONROE COUNTY, FLORIDA

Item Number	Item Description and		Estimated Quantity	Unit	Unit Price	Total Amount Per Item
STEAM BOAT CREEK #904980						
101- 1	MOBILIZATION	15%	1	LS		$10,347.38
102- 1	MAINTENANCE OF TRAFFIC (# DAYS)	15%	1	LS		$10,347.38
104- 11	FLOATING TURBIDITY BARRIER		1264	LF	$15.00	$18,960.00
401- 70- 3	RESTORE SPALLED AREAS, LATEX MODIFIED MORTAR, ACRYLIC		26.6	CF	$558.33	$14,851.58
411- 1	EPOXY MATERIAL FOR CRACK INJECTION-STRUCTURES REHAB		1	GA	$145.00	$181.25
411- 1	(ASPHALT) EPOXY MATERIAL FOR CRACK INJECTION-STRUCTURES REHAB		3	GA	$145.00	$362.50
411- 2	CRACKS INJECT & SEAL-STRUCTURES REHAB		10	LF	$80.00	$800.00
411- 2	(ASPHALT) CRACKS INJECT & SEAL-STRUCTURES REHAB		20	LF	$80.00	$1,600.00
415- 1- 4	REINFORCING STEEL-SUPERSTRUCTURE		108	LB	$1.50	$162.00
415- 1- 5	REINFORCING STEEL-SUBSTRUCTURE		52	LB	$1.50	$78.00
458- 1- 21	BRIDGE DECK EXPANSION JOINT, REHABILITATION, POURED JOINT WITH BACKER ROD		267	LF	$120.00	$31,987.20
					CONTINGENCIES 20%	$17,935.46
					TOTAL	$107,612.74

Kisinger Campo & Associates, Corp.

Allen Kisinger 1904-1981 engineering • inspection • planning

Project : Steamboat Creek Repair
Subject : Estimated Quantities

Calcs : JWG **Date :** 05/14
Check : JLL **Date :** 7/14

104- 11 FLOATING TURBIDITY BARRIER

Pile Bents

	Length (ft)	Width (ft)	Perimeter (ft)
Perimeter around bent	39	3.5	
5 ft working zone around bent	5	5	
Total barrier needed	49	13.5	125.00
Number of bents			4
Layers of barrier around work area (double)			2

LENGTH: 1000 LF

Abutments

	Length (ft)	Width (ft)	Perimeter (ft)
Perimeter around abutment	39	3.5	
5 ft working zone around abutment	5	5	
Total barrier needed	49	8.5	66.00
Number of abutments			2
Layers of barrier around work area (double)			2

LENGTH: 264 LF

TOTAL LENGTH: 1264 LF

401- 70- 3 RESTORE SPALLED AREAS, LATEX MODIFIED MORTAR- ACRYLIC

	Volume (cf)
Railing	2.8
Concrete Deck	15.0
Beams & Diaphragms	0.2
Prestressed Piles	2.6
Bent Caps	3.8
Abutments	2.2
	26.6

TOTAL VOLUME: 26.6 CF

411- 1 EPOXY MATERIAL FOR CRACK INJECTION-STRUCTURES REHAB

	Volume (Gal)
Railing	1.3
Concrete Deck	0.0
Beams & Diaphragms	0.0
Prestressed Piles	0.0
Bent Caps	0.0
Abutments	0.0
	1.3

TOTAL VOLUME: 1 GA

Kisinger Campo & Associates, Corp.

Allen Kisinger 1904-1981 engineering • inspection • planning

Project : Steamboat Creek Repair
Subject : Estimated Quantities

Calcs : JWG **Date :** 05/14
Check : JLL **Date :** 7/14

411- 1 (ASPHALT) EPOXY MATERIAL FOR CRACK INJECTION-STRUCTURES REHAB

	Volume (Gal)
Asphalt	2.5
	2.5

TOTAL VOLUME: 3 GA

411- 2 CRACKS INJECT & SEAL-STRUCTURES REHAB

	Length (LF)
Railing	8.0
Concrete Deck	0.0
Beams & Diaphragms	2.0
Prestressed Piles	0.0
Bent Caps	0.0
Abutments	0.0
	10.0

TOTAL LENGTH: 10 LF

411- 2 (ASPHALT) CRACKS INJECT & SEAL-STRUCTURES REHAB

	Length (LF)
Asphalt	20.0
	20.0

TOTAL LENGTH: 20 LF

415- 1- 4 REINFORCING STEEL-SUPERSTRUCTURE

	Volume concrete (cf)	Steel density* (lb/cf)	Steel (lb)
Reinforcing steel	18.0	6	108.0

TOTAL WEIGHT: 108 LB

*Based on similar estimates

Kisinger Campo & Associates, Corp.

Allen Kisinger 1904-1981 engineering • inspection • planning

Project : Steamboat Creek Repair
Subject : Estimated Quantities

Calcs : JWG **Date :** 05/14
Check : JLL **Date :** 7/14

415- 1- 5 REINFORCING STEEL-SUBSTRUCTURE

	Volume concrete (cf)	Steel density* (lb/cf)	Steel (lb)
Reinforcing steel from spall repair	8.6	6	51.6
			51.6

TOTAL WEIGHT: 52 LB

*Based on similar estimates

458- 1- 21 BRIDGE DECK EXPANSION JOINT, REHABILITATION,

	Number of spans	Width of bridge (ft)	Total length (ft)
Spans 1-6	7	38.080	266.560

TOTAL LENGTH: 267 LF

21.2 Replacement Cost Estimate (904980)

CONSTRUCTION COST ESTIMATE

for

STEAM BOAT CREEK BRIDGE REPLACEMENT

Bridge #904980

MONROE COUNTY, FLORIDA

Replacement Cost is based on FDOT Historical Bridge Cost per square foot

STEAM BOAT CREEK #904980

Use cost for short simple span Prestressed Slab Unit Bridge		$160.00
Increase by 3% due to construction over open water	3%	4.80
Increase by 20% due to phased construction	20%	$32.00
Increase by 40% due to work in Monroe County	40%	$64.00

Cost per Square Foot $260.80

Bridge Length (ft)	316
Bridge Width (ft)	38.08
Deck Area (sf)	12033
Bridge Cost	$3,138,279.42
Approach work, approach slab, and incidentals	$300,000.00

TOTAL $3,438,279.42

22.0 Tubby's Creek (904982)

22.1 Repair Cost Estimate (904982)

CONSTRUCTION COST ESTIMATE

for

TUBBY'S CREEK BRIDGE REPAIR

Bridge #904982

MONROE COUNTY, FLORIDA

Item Number	Item Description and		Estimated Quantity	Unit	Unit Price	Total Amount Per Item
TUBBY'S CREEK #904982						
101- 1	MOBILIZATION	15%	1	LS		$11,634.73
102- 1	MAINTENANCE OF TRAFFIC (# DAYS)	15%	1	LS		$11,634.73
104- 11	FLOATING TURBIDITY BARRIER		495	LF	$15.00	$7,428.00
401- 70- 3	RESTORE SPALLED AREAS, LATEX MODIFIED MORTAR, ACRYLIC		40.8	CF	$558.33	$22,779.86
411- 1	EPOXY MATERIAL FOR CRACK INJECTION-STRUCTURES REHAB		3	GA	$145.00	$362.50
411- 1	(ASPHALT) EPOXY MATERIAL FOR CRACK INJECTION-STRUCTURES REHAB		35	GA	$145.00	$5,075.00
411- 2	CRACKS INJECT & SEAL-STRUCTURES REHAB		17	LF	$80.00	$1,360.00
411- 2	(ASPHALT) CRACKS INJECT & SEAL-STRUCTURES REHAB		272	LF	$80.00	$21,760.00
415- 1- 4	REINFORCING STEEL-SUPERSTRUCTURE		233	LB	$1.50	$349.50
415- 1- 5	REINFORCING STEEL-SUBSTRUCTURE		12	LB	$1.50	$18.00
458- 1- 21	BRIDGE DECK EXPANSION JOINT, REHABILITATION, POURED JOINT WITH BACKER ROD		154	LF	$120.00	$18,432.00
					CONTINGENCIES 20%	$20,166.86
					TOTAL	$121,001.19

V: JLL 7/14

Kisinger Campo & Associates, Corp.

Allen Kisinger 1904-1985 engineering • inspection • planning

Project : Tubby's Creek Repair
Subject : Estimated Quantities

Calcs : JWG **Date :** 05/14
Check : JLL **Date :** 7/14

104- 11 FLOATING TURBIDITY BARRIER

Pile Bents

	Length (ft)	Width (ft)	Perimeter (ft)
Perimeter around bent	38.4	3.5	
5 ft working zone around bent	5	5	
Total barrier needed	48.4	13.5	123.80
Number of bents			2
Layers of barrier around work area (double)			2

LENGTH: 495 LF

TOTAL LENGTH: 495 LF

401- 70- 3 RESTORE SPALLED AREAS, LATEX MODIFIED MORTAR- ACRYLIC

	Volume (cf)
Railing	0.0
Concrete Deck	38.8
Bent Caps	2.0
	40.8

TOTAL VOLUME: 40.8 CF

411- 1 EPOXY MATERIAL FOR CRACK INJECTION-STRUCTURES REHAB

	Volume (Gal)
Railing	1.3
Concrete Deck	1.3
Bent Caps	0.0
	2.5

TOTAL VOLUME: 3 GA

411- 1 (ASPHALT) EPOXY MATERIAL FOR CRACK INJECTION-STRUCTURES REHAB

	Volume (Gal)
Asphalt	35.0
	35.0

TOTAL VOLUME: 35 GA

Kisinger Campo & Associates, Corp.

Allen Kisinger 1904-1981 engineering • inspection • planning

Project : Tubby's Creek Repair
Subject : Estimated Quantities

Calcs : JWG **Date :** 05/14
Check : JLL **Date :** 7/14

411- 2 CRACKS INJECT & SEAL-STRUCTURES REHAB

	Length (LF)
Railing	10.0
Concrete Deck	7.0
Bent Caps	0.0
	17.0

TOTAL LENGTH: 17 LF

411- 2 (ASPHALT) CRACKS INJECT & SEAL-STRUCTURES REHAB

	Length (LF)
Asphalt	272.0
	272.0

TOTAL LENGTH: 272 LF

415- 1- 4 REINFORCING STEEL-SUPERSTRUCTURE

	Volume concrete (cf)	Steel density* (lb/cf)	Steel (lb)
Reinforcing steel	38.8	6	232.8

TOTAL WEIGHT: 233 LB

*Based on similar estimates

415- 1- 5 REINFORCING STEEL-SUBSTRUCTURE

	Volume concrete (cf)	Steel density* (lb/cf)	Steel (lb)
Reinforcing steel from spall repair	2.0	6	12.0
			12.0

TOTAL WEIGHT: 12 LB

*Based on similar estimates

Kisinger Campo & Associates, Corp.

Allen Kisinger 1904-1981 engineering • inspection • planning

Project : Tubby's Creek Repair
Subject : Estimated Quantities

Calcs : JWG **Date :** 05/14
Check : JLL **Date :** 7/14

458- 1- 21 **BRIDGE DECK EXPANSION JOINT, REHABILITATION,**

	Number of spans	Width of bridge (ft)	Total length (ft)
Spans 1-3	4	38.400	153.600

TOTAL LENGTH: 154 LF

22.2 Replacement Cost Estimate (904982)

CONSTRUCTION COST ESTIMATE

for

TUBBY'S CREEK BRIDGE REPLACEMENT

Bridge #904982

MONROE COUNTY, FLORIDA

Replacement Cost is based on FDOT Historical Bridge Cost per square foot

TUBBY'S CREEK #904982

Use cost for short simple span Prestressed Slab Unit Bridge		$160.00
Increase by 3% due to construction over open water	3%	4.80
Increase by 20% due to phased construction	20%	$32.00
Increase by 40% due to work in Monroe County	40%	$64.00

Cost per Square Foot $260.80

Bridge Length (ft)	101
Bridge Width (ft)	38.4
Deck Area (sf)	3878
Bridge Cost	$1,011,486.72
Approach work, approach slab, incedental items	$300,000.00

TOTAL $1,311,486.72

V: KRG
7/14

23.0 Mosquito Creek (904984)

23.1 Repair Cost Estimate (904984)

CONSTRUCTION COST ESTIMATE

for

MOSQUITO CREEK BRIDGE REPAIR

Bridge #904984

MONROE COUNTY, FLORIDA

Item Number	Item Description and		Estimated Quantity	Unit	Unit Price		Total Amount Per Item
MOSQUITO CREEK #904984							
101- 1	MOBILIZATION	15%	1	LS			$11,349.71
102- 1	MAINTENANCE OF TRAFFIC (# DAYS)	15%	1	LS			$11,349.71
104- 11	FLOATING TURBIDITY BARRIER		246	LF	$15.00		$3,690.00
401- 70- 3	RESTORE SPALLED AREAS, LATEX MODIFIED MORTAR, ACRYLIC		37.6	CF	$558.33		$20,993.21
411- 1	EPOXY MATERIAL FOR CRACK INJECTION-STRUCTURES REHAB		9	GA	$145.00		$1,268.75
411- 1	(ASPHALT) EPOXY MATERIAL FOR CRACK INJECTION-STRUCTURES REHAB		34	GA	$145.00		$4,893.75
411- 2	CRACKS INJECT & SEAL-STRUCTURES REHAB		70	LF	$80.00		$5,600.00
411- 2	(ASPHALT) CRACKS INJECT & SEAL-STRUCTURES REHAB		258	LF	$80.00		$20,640.00
415- 1- 4	REINFORCING STEEL-SUPERSTRUCTURE		203	LB	$1.50		$304.50
415- 1- 5	REINFORCING STEEL-SUBSTRUCTURE		23	LB	$1.50		$34.50
458- 1- 21	BRIDGE DECK EXPANSION JOINT, REHABILITATION, POURED JOINT WITH BACKER ROD		152	LF	$120.00		$18,240.00
					CONTINGENCIES	20%	$19,672.82
					TOTAL		$118,036.94

Kisinger Campo & Associates, Corp.

Allen Kisinger 1904-1981 engineering • inspection • planning

Project : Mosquito Creek Repair
Subject : Estimated Quantities

Calcs : JWG **Date :** 05/14
Check : JLL **Date :** 7/14

104- 11 FLOATING TURBIDITY BARRIER

Pile Bents

	Length (ft)	Width (ft)	Perimeter (ft)
Perimeter around bent	38	3.5	
5 ft working zone around bent	5	5	
Total barrier needed	48	13.5	123.00
Number of bents			1
Layers of barrier around work area (double)			2

LENGTH: 246 LF

TOTAL LENGTH: 246 LF

401- 70- 3 RESTORE SPALLED AREAS, LATEX MODIFIED MORTAR- ACRYLIC

	Volume (cf)
Railing	0.0
Concrete Deck	33.8
Bent Caps	3.8
	37.6

TOTAL VOLUME: 37.6 CF

411- 1 EPOXY MATERIAL FOR CRACK INJECTION-STRUCTURES REHAB

	Volume (Gal)
Railing	2.5
Concrete Deck	6.3
Bent Caps	0.0
	8.8

TOTAL VOLUME: 9 GA

411- 1 (ASPHALT) EPOXY MATERIAL FOR CRACK INJECTION-STRUCTURES REHAB

	Volume (Gal)
Asphalt	33.8
	33.8

TOTAL VOLUME: 34 GA

Kisinger Campo & Associates, Corp.

Allen Kisinger 1904-1981 engineering • inspection • planning

Project : Mosquito Creek Repair
Subject : Estimated Quantities

Calcs : JWG **Date :** 05/14
Check : TLS **Date :** 7/14

411- 2 CRACKS INJECT & SEAL-STRUCTURES REHAB

	Length (LF)
Railing	20.0
Concrete Deck	50.0
Bent Caps	0.0
	70.0

TOTAL LENGTH: 70 **LF**

411- 2 (ASPHALT) CRACKS INJECT & SEAL-STRUCTURES REHAB

	Length (LF)
Asphalt	258.0
	258.0

TOTAL LENGTH: 258 **LF**

415- 1- 4 REINFORCING STEEL-SUPERSTRUCTURE

	Volume concrete (cf)	Steel density* (lb/cf)	Steel (lb)
Reinforcing steel	33.8	6	202.8

TOTAL WEIGHT: 203 **LB**

*Based on similar estimates

415- 1- 5 REINFORCING STEEL-SUBSTRUCTURE

	Volume concrete (cf)	Steel density* (lb/cf)	Steel (lb)
Reinforcing steel from spall repair	3.8	6	22.8
			22.8

TOTAL WEIGHT: 23 **LB**

*Based on similar estimates

Kisinger Campo & Associates, Corp.

Allen Kisinger 1904-1981 engineering • inspection • planning

Project : Mosquito Creek Repair
Subject : Estimated Quantities

Calcs : JWG **Date :** 05/14
Check : JLL **Date :** 7/14

458- 1- 21 **BRIDGE DECK EXPANSION JOINT, REHABILITATION,**

	Number of spans	Width of bridge (ft)	Total length (ft)
Spans 1-3	4	38.000	152.000

TOTAL LENGTH: 152 **LF**

23.2 Replacement Cost Estimate (904984)

CONSTRUCTION COST ESTIMATE

for

MOSQUITO CREEK BRIDGE REPLACEMENT

Bridge #904984

MONROE COUNTY, FLORIDA

Replacement Cost is based on FDOT Historical Bridge Cost per square foot

MOSQUITO CREEK #904984

Use cost for short simple span Prestressed Slab Unit Bridge		$160.00
Increase by 3% due to construction over open water	3%	4.80
Increase by 20% due to phased construction	20%	$32.00
Increase by 40% due to work in Monroe County	40%	$64.00

Cost per Square Foot $260.80

Bridge Length (ft)	101
Bridge Width (ft)	38
Deck Area (sf)	3838
Bridge Cost	$1,000,950.40
Approach work, approach slab, and incidental items	$300,000.00

TOTAL $1,300,950.40

V: KRG 7/14

24.0 Saunder's Creek (904986)

24.1 Repair Cost Estimate (904986)

CONSTRUCTION COST ESTIMATE

for

SAUNDER'S CREEK BRIDGE REPAIR

Bridge #904986

MONROE COUNTY, FLORIDA

Item Number	Item Description and		Estimated Quantity	Unit	Unit Price		Total Amount Per Item
SAUNDER'S CREEK #904986							
101- 1	MOBILIZATION	15%	1	LS			$5,915.56
102- 1	MAINTENANCE OF TRAFFIC (# DAYS)	15%	1	LS			$5,915.56
104- 11	FLOATING TURBIDITY BARRIER		728	LF	$15.00		$10,920.00
401- 70- 3	RESTORE SPALLED AREAS, LATEX MODIFIED MORTAR, ACRYLIC		39.2	CF	$558.33		$21,886.54
411- 1	EPOXY MATERIAL FOR CRACK INJECTION-STRUCTURES REHAB		8	GA	$145.00		$1,087.50
411- 2	CRACKS INJECT & SEAL-STRUCTURES REHAB		51	LF	$80.00		$4,080.00
415- 1- 4	REINFORCING STEEL-SUPERSTRUCTURE		8	LB	$1.50		$12.00
415- 1- 5	REINFORCING STEEL-SUBSTRUCTURE		228	LB	$1.50		$342.00
536- 1- 3	GUARDRAIL REPLACEMENT		44	LF	$25.35		$1,109.06
					CONTINGENCIES	20%	$10,253.65
					TOTAL		$61,521.87

V. JLL 7/14

Kisinger Campo & Associates, Corp.

Allen Kisinger 1904-1981 engineering · inspection · planning

Project : Saunder's Creek Repair
Subject : Estimated Quantities

Calcs : JWG **Date :** 05/14
Check : JLL **Date :** 7/14

104- 11 FLOATING TURBIDITY BARRIER

Pile Bents

	Length (ft)	Width (ft)	Perimeter (ft)
Perimeter around bent	36	3.5	
5 ft working zone around bent	5	5	
Total barrier needed	46	13.5	119.00
Number of bents			2
Layers of barrier around work area (double)			2

LENGTH: 476 LF

Abutments

	Length (ft)	Width (ft)	Perimeter (ft)
Perimeter around abutments	36	3.5	
5 ft working zone around abutment	5	5	
Total barrier needed	46	8.5	63.00
Number of abutments			2
Layers of barrier around work area (double)			2

LENGTH: 252 LF

TOTAL LENGTH: 728 LF

401- 70- 3 RESTORE SPALLED AREAS, LATEX MODIFIED MORTAR- ACRYLIC

	Volume (cf)
Concrete Deck	1.2
Bent Caps	31.2
Abutments	6.8
	39.2

TOTAL VOLUME: 39.2 CF

411- 1 EPOXY MATERIAL FOR CRACK INJECTION-STRUCTURES REHAB

	Volume (Gal)
Concrete Deck	5.0
Bent Caps	2.5
Abutments	0.0
	7.5

TOTAL VOLUME: 8 GA

Kisinger Campo & Associates, Corp.

Allen Kisinger 1904-1981 engineering • inspection • planning

Project : Saunder's Creek Repair
Subject : Estimated Quantities

Calcs : JWG **Date :** 05/14
Check : JLL **Date :** 7/14

411- 2 CRACKS INJECT & SEAL-STRUCTURES REHAB

	Length (LF)
Concrete Deck	36.0
Bent Caps	15.0
Abutments	0.0
	51.0

TOTAL LENGTH: 51 **LF**

415- 1- 4 REINFORCING STEEL-SUPERSTRUCTURE

	Volume concrete (cf)	Steel density* (lb/cf)	Steel (lb)
Reinforcing steel	1.2	6	7.2

TOTAL WEIGHT: 8 **LB**

*Based on similar estimates

415- 1- 5 REINFORCING STEEL-SUBSTRUCTURE

	Volume concrete (cf)	Steel density* (lb/cf)	Steel (lb)
Reinforcing steel from spall repair	38.0	6	228.0
			228.0

TOTAL WEIGHT: 228 **LB**

*Based on similar estimates

536- 1- 3 GUARDRAIL PANEL REPLACEMENT

Location	Number of panels	Length (ft)	Total length (LF)
Northeast	2	6.25	12.5
Southeast	5	6.25	31.25

TOTAL LENGTH: 43.75 **LF**

24.2 Replacement Cost Estimate (904986)

CONSTRUCTION COST ESTIMATE

for

SAUNDER'S CREEK BRIDGE REPLACEMENT

Bridge #904986

MONROE COUNTY, FLORIDA

Replacement Cost is based on FDOT Historical Bridge Cost per square foot

SAUNDER'S CREEK #904986

Use cost for short simple span Prestressed Slab Unit Bridge		$160.00
Increase by 3% due to construction over open water	3%	4.80
Increase by 20% due to phased construction	20%	$32.00
Increase by 40% due to work in Monroe County	40%	$64.00

Cost per Square Foot $260.80

Bridge Length (ft)	101.1
Bridge Width: 24'(Lanes)+4'(Shldr.)+5'(S/W) 1.08'+1.54'(Barriers) (ft)	36
Deck Area (sf)	3640
Bridge Cost	$949,207.68
Approach work, approach slab, and incedental items	$300,000.00

TOTAL $1,249,207.68

V. KRG
7/14

25.0 Card Sound Bridge (904990)

25.1 Repair Cost Estimate (904990)

CONSTRUCTION COST ESTIMATE

for

FPID # 431917-1-58-01
CARD SOUND BRIDGE REPAIR

MONROE COUNTY, FLORIDA

Item Number	Item Description and		Estimated Quantity	Unit	Unit Price	Total Amount Per Item
CARD SOUND BRIDGE #904990						
101- 1	MOBILIZATION	15%	1	LS		$489,958.11
102- 1	MAINTENANCE OF TRAFFIC (# DAYS)	15%	1	LS		$489,958.11
104- 11	FLOATING TURBIDITY BARRIER		9132	LF	$15.00	$136,980.00
400- 4- 5	CONCRETE CLASS IV, SUBSTRUCTURE		16.4	CY	$2,000.00	$32,700.00
400-142- 3	CATHODIC PROTECTION SYSTEM, ZINC ALUMINUM SPRAY		21065	SF	$55.00	$1,158,596.03
401- 70- 3	RESTORE SPALLED AREAS, LATEX MODIFIED MORTAR, ACRYLIC		2095.0	CF	$558.33	$1,169,701.35
411- 1	EPOXY MATERIAL FOR CRACK INJECTION-STRUCTURES REHAB		45	GA	$145.00	$6,525.00
411- 2	CRACKS INJECT & SEAL-STRUCTURES REHAB		345	LF	$80.00	$27,600.00
413-151	METHACRYLATE MONOMER		31	GA	$123.00	$3,833.50
413-154	CLEANING AND SEALING CONCRETE SURFACES: PENETRANT SEALER OR METHACRYLATES		3116.7	SF	$0.98	$3,054.34
415- 1- 4	REINFORCING STEEL-SUPERSTRUCTURE		4032	LB	$1.50	$6,048.00
415- 1- 5	REINFORCING STEEL-SUBSTRUCTURE		13095	LB	$1.50	$19,642.50
455- 76	WRAP PILE CLUSTERS		50	EA	$1,500.00	$75,000.00
457- 2- 221	CATHODIC PROTECTION INTEGRAL PILE JACKET, STRUCTURAL, 16.1" to 30" GALVANIC SYSTEM		21	LF	$2,500.00	$52,500.00
458- 1- 21	BRIDGE DECK EXPANSION JOINT, REHABILITATION, POURED JOINT WITH BACKER ROD		1295	LF	$120.00	$155,430.00
460- 1- 13	STRUCT STEEL REHAB-BOLT, NUT, WASH & PLT		380	LB	$150.00	$57,060.00
460- 1- 15	STRUCT STEEL - REHAB, MISC.		970	LB	$50.00	$48,500.00
470- 1	TREATED TIMBER, STRUCTURAL		3.8	MB	$10,500.00	$39,766.65
561- 1	COATING EXISTING STRUCTURAL STEEL		1	LS	134 Total @ $2000/T	$267,200.00
630-2-15	CONDUIT, FURNISH & INSTALL, BRIDGE MOUNT		250	LF	$25.00	$6,250.00
					CONTINGENCIES 15%	$636,945.54
					TOTAL	$4,876,999.12 *

* Pay Item 561- 1 includes the cost of painting the structural steel spans, associated bearings and all prestressed beam steel bearing assemblies.

* FROM 90% REPAIR PLANS

V. SLL 7/14

Kisinger Campo & Associates, Corp.

Allen Kisinger 1904-1981 engineering · inspection · planning

Project : Card Sound Bridge Repair
Subject : Estimated Quantities

Calcs : JLL **Date :** 02/14
Check : **Date :**

104- 11 FLOATING TURBIDITY BARRIER

Pile Bents

	Length (ft)	Width (ft)	Perimeter (ft)
Perimeter around bent	31.5	3.5	
5 ft working zone around bent	5	5	
Total barrier needed	41.5	13.5	110.00
Number of bents			11
Layers of barrier around work area (double)			2
		LENGTH:	2420 LF

Approach Piers

	Length (ft)	Width (ft)	Perimeter (ft)
Perimeter around pier	30	9	
5 ft working zone around pier	5	5	
Total barrier needed	40	19	118.00
Number of piers			20
Layers of barrier around work area (double)			2
		LENGTH:	4720 LF

Main Channel Piers w/ Fender System

	Length (ft)	Width (ft)	Perimeter (ft)
Perimeter around fender	224	5	
5 ft working zone around fender	5	5	
Total barrier needed	234	15	498.00
Number of piers			2
Layers of barrier around work area (double)			2
		LENGTH:	1992 LF
		TOTAL LENGTH:	**9132 LF**

Kisinger Campo & Associates, Corp.

Allen Kisinger 1904-1981 engineering • inspection • planning

Project : Card Sound Bridge Repair
Subject : Estimated Quantities

Calcs : JLL **Date :** 02/14
Check : **Date :**

400-4-5 **CONCRETE CLASS IV, SUBSTRUCTURE**

	Volume (cy)
Railing	0.0
Concrete Deck	0.0
Beams & Diaphragms	0.0
Prestressed Piles	0.0
Footings	0.0
Struts	0.0
Columns	0.0
Pier Caps	0.0
End Bents	0.0
Fender System	16.4
	16.4

TOTAL VOLUME: **16.4** **CY**

Kisinger Campo & Associates, Corp.

Allen Kisinger 1904-1981 engineering • inspection • planning

Project : Card Sound Bridge Repair
Subject : Estimated Quantities

Calcs : JLL **Date :** 02/14
Check : **Date :**

400-142-3 **CATHODIC PROTECTION SYSTEM, ZINC ALUMINUM SPRAY**

Pile Bent Caps
Bent caps sprayed on all sides and bottom (note: 5~24in piles per bent)

Number of caps to be metalized	Length cap (ft)	Width cap (ft)	Height of cap (ft)	Surface Area (SF)
11	31.50	3.50	3.00	3302.75

AREA: 3303 SF

Footings
Footings sprayed on top and all sides from the waterline up.

Number of footings to be metalized	Length (ft)	Width (ft)	Height (ft)	Surface Area (SF)
52	9.00	9.00	2.00	7455.70
4	14.00	9.00	2.00	808.38

AREA: 8264 SF

Struts
Struts sprayed on all sides.

Number of struts to be metalized	Length (ft)	Width (ft)	Height (ft)	Surface Area (SF)
26	12.00	3.50	2.50	3744.00
4	13.00	4.50	2.50	728.00

AREA: 4472 SF

Columns
Columns sprayed on the bottom 8'.

Number of columns to be metalized	Diameter (ft)	Height (ft)	Surface Area (SF)
52	3.50	8.00	4574.16
4	4.50	8.00	452.39

AREA: 5027 SF

TOTAL AREA: 21065 SF

Kisinger Campo & Associates, Corp.

Allen Kisinger 1904-1981 engineering • inspection • planning

Project : Card Sound Bridge Repair
Subject : Estimated Quantities

Calcs : JLL **Date :** 02/14
Check : **Date :**

401- 70- 3 RESTORE SPALLED AREAS, LATEX MODIFIED MORTAR- ACRYLIC

	Volume (cf)
Railing	82.6
Concrete Deck	565.0
Beams & Diaphragms	24.4
Prestressed Piles	2.4
Footings	536.6
Struts	210.0
Columns	483.2
Pier Caps	41.2
End Bents	0.2
Fender System	149.4
	2095.0

TOTAL VOLUME: 2095.0 **CF**

411- 1 EPOXY MATERIAL FOR CRACK INJECTION-STRUCTURES REHAB

	Volume (Gal)
Railing	0.0
Concrete Deck	5.0
Beams & Diaphragms	0.0
Prestressed Piles	2.5
Footings	1.3
Struts	0.0
Columns	10.0
Pier Caps	26.3
End Bents	0.0
	45.0

TOTAL VOLUME: 45 **GA**

Kisinger Campo & Associates, Corp.

Allen Kisinger 1904-1981 engineering • inspection • planning

Project : Card Sound Bridge Repair
Subject : Estimated Quantities

Calcs : JLL **Date :** 02/14
Check : **Date :**

411- 2 CRACKS INJECT & SEAL-STRUCTURES REHAB

	Length (LF)
Railing	0.0
Concrete Deck	38.0
Beams & Diaphragms	0.0
Prestressed Piles	18.0
Footings	9.0
Struts	0.0
Columns	80.0
Pier Caps	200.0
End Bents	0.0
	345.0

TOTAL LENGTH: 345 LF

413-151 METHACRYLATE MONOMER

Location	Width (ft)	Span (ft)	Surface area (SF)
Existing Deck	31.17	100.00	3116.7
			3116.7

	Volume (GA)
100 SF / GA	**31.2**

TOTAL AREA: 31 GA

413-154 CLEANING AND SEALING CONCRETE SURFACES: PENETRANT SEALER OR METHACRYLATES

Location	Width (ft)	Span (ft)	Surface area
Existing Deck	31.17	100.00	3116.7
			3116.7

TOTAL AREA: 3,116.7 SF

Kisinger Campo & Associates, Corp.

Allan Kisinger 1904-1981 engineering • inspection • planning

Project : Card Sound Bridge Repair
Subject : Estimated Quantities

Calcs : JLL **Date :** 02/14
Check : **Date :**

415- 1- 4 REINFORCING STEEL-SUPERSTRUCTURE

	Volume concrete (cf)	Steel density* (lb/cf)	Steel (lb)
Reinforcing steel	672.0	6	4032.0

TOTAL WEIGHT: 4032 **LB**

*Based on similar estimates

415- 1- 5 REINFORCING STEEL-SUBSTRUCTURE

	Volume concrete (cf)	Steel density* (lb/cf)	Steel (lb)
Reinforcing steel from spall repair	1423.0	6	8538.0
Reinforcing steel from fender pile replacement			4557.0
			13095.0

TOTAL WEIGHT: 13095 **LB**

*Based on similar estimates

455- 76 WRAP PILE CLUSTERS

	Quantity
Assume 50 locations will need to be replaced	50

TOTAL QUANTITY: 50 **EA**

Kisinger Campo & Associates, Corp.

Allen Kisinger 1904-1981 engineering • inspection • planning

Project : Card Sound Bridge Repair
Subject : Estimated Quantities

Calcs : JLL **Date :** 02/14
Check : **Date :**

457- 2-221 CATHODIC PROTECTION INTEGRAL PILE JACKET, STRUCTURAL, 16.1" TO 30.0",

Bent	Pile	Top of Jacket El.	Bottom of Jacket El.	Length (ft)	Use (ft)
18	2	-0.750	-6.300	5.55	6.00
20	2	-0.750	-7.100	6.35	7.00
25	3	-0.750	-8.700	7.95	8.00
					21

TOTAL LENGTH: 21 **LF**

458- 1- 21 BRIDGE DECK EXPANSION JOINT, REHABILITATION, POURED JOINT WITH BACKER ROD

	Number of spans	Width of bridge (ft)	Total length (ft)
Spans 1-7 and 35-40	13	38.250	497.250
Spans 8-19 and 35-34	24	33.250	798.000

TOTAL LENGTH: 1295 **LF**

460- 1- 13 STRUCTURAL STEEL REHAB-BOLT, NUT, WASH & PLT

*Bolts are 7/8in diameter. Assume 20% need to be replaced.

Type	Number per Fender	Number of Bolts per Cluster	Length (in)	Weight (lb/ft)*	Total Weight (lb)*
2-Pile Cluster	25	4	30	2.5	620.0
3-Pile Cluster	10	8	20	2.5	330.7
					950.7
Number of Fenders					2
Percent to Replace					20.00%

TOTAL WEIGHT: 380 **LB**

Kisinger Campo & Associates, Corp.

Allen Kisinger 1904-1981 engineering • inspection • planning

Project : Card Sound Bridge Repair
Subject : Estimated Quantities

Calcs : JLL **Date :** 02/14
Check : **Date :**

460- 1- 15 STRUCTURAL STEEL - REHAB, MISC.

Span	Member	Steel Repair (lb)*
20	LATERAL BRACING	60.0
S20 THRU 22	VERTICAL WEB STIFFENERS	400.0
20	G20-2	153.1
21	G21-2	153.1
21	G21-1	50.0
22	G22-2	153.1
		969.4

TOTAL WEIGHT: 970 **LB**

470- 1 TREATED TIMBER, STRCUTURAL

*Replace 100% of "F" boards and 10% of all other board types. Use quantites from original plans.

Board	FBM (from original plans)	Total FBM*
A	2133	213.3
B	6400	640.0
C	6400	640.0
D	1633	163.3
E	928	92.8
F	1925	1925.0
G	896	89.6
T	233	23.3
		3787.3

TOTAL WEIGHT: 3.8 **MB**

561- 1 COATING EXISTING STRUCTURAL STEEL

*Total weight taken from existing bridge plans.

	Total Weight (ton)*
Structural Steel (Carbon)	108.6
Structural Steel (Steel Span Bearing Shoe Assembly)	2.9
Structural Steel (Prestressed Beam Shoes)	22.1
	133.6

TOTAL WEIGHT: 134 **TN**

Kisinger Campo & Associates, Corp.

Allen Kisinger 1904-1981 engineering · inspection · planning

Project : Card Sound Bridge Repair
Subject : Estimated Quantities

Calcs : JLL **Date :** 02/14
Check : _____ **Date :** _____

630-2-15 **CONDUIT, FURNISH & INSTALL, BRIDGE MOUNT**

*Total weight taken from existing bridge plans.

	Total Weight (ton)*
North Fender	100.0
South Fender	150.0
	250.0

TOTAL WEIGHT: 250 **LF**

25.2 Replacement Cost Estimate (904990)

4. Recommendations

The three bridge alternatives previously described are as follows:

- Alternative 1 – Repair Existing Bridge in Kind
- Alternative 2 – Widen Existing Bridge to Accommodate Sidewalk
- Alternative 3 – Bridge Replacement

See Table 1 below for a summary of the bridge alternatives.

Table 1 – Bridge Alternative Summary

Alternative	Estimated Service Life	Estimated Cost	Permitting Delays	Time Required for Permitting and Design
1	10-15 Years	$5.7 M	Low	6 Months
2	5-10 Years from the Time of Sidewalk Construction	$10.2 M	High	2-4 Years
3	75 Years	$25.1 M - $32.6 M	High	4-6 Years

The four fender system alternatives previously described are as follows:

- Fender Alternative 1 – Repair fender system in kind. Spall repair for concrete piles. Replace all timber and attachment hardware.
- Fender Alternative 2 – Replace fender system in kind. Replace all precast concrete piles. Replace all timber and attachment hardware.
- Fender Alternative 3 – Replace fender system timber with composite lumber. Replace all precast concrete piles and attachment hardware in kind.
- Fender Alternative 4 – Replace fender system with all composite fender system using polymeric piles and composite lumber.

See Table 2 below for a summary of the fender system alternatives.

26.0 Ocean Bay Drive

26.1 Repair Cost Estimate (Ocean Bay Drive)

CONSTRUCTION COST ESTIMATE

for

OCEAN BAY DRIVE BRIDGE REPAIR

MONROE COUNTY, FLORIDA

Item Number	Item Description and		Estimated Quantity	Unit	Unit Price	Total Amount Per Item
OCEAN BAY DRIVE						
101- 1	MOBILIZATION	15%	1	LS		$11,277.79
102- 1	MAINTENANCE OF TRAFFIC (# DAYS)	15%	1	LS		$11,277.79
104- 11	FLOATING TURBIDITY BARRIER		354	LF	$15.00	$5,310.00
401- 70- 3	RESTORE SPALLED AREAS, LATEX MODIFIED MORTAR, ACRYLIC		122.6	CF	$558.33	$68,451.26
411- 2	(ASPHALT) CRACKS INJECT& SEAL-STRUCTURES REHAB		4.0	LF	$80.00	$320.00
415- 1- 4	REINFORCING STEEL-SUPERSTRUCTURE		592	LB	$1.50	$888.00
415- 1- 5	REINFORCING STEEL-SUBSTRUCTURE		144	LB	$1.50	$216.00
					CONTINGENCIES 20%	$19,548.17
					TOTAL	$117,289.00

V. JLL 7/14

Kisinger Campo & Associates, Corp.

Allen Kisinger 1904-1981 engineering • inspection • planning

Project : Ocean Bay Drive Repair
Subject : Estimated Quantities

Calcs : JWG **Date :** 05/14
Check : JLL **Date :** 7/14

104- 11 FLOATING TURBIDITY BARRIER

Pile Bents

	Length (ft)	Width (ft)	Perimeter (ft)
Perimeter around bent	30	3.5	
5 ft working zone around bent	5	5	
Total barrier needed	40	8.5	88.50
Number of bents			2
Layers of barrier around work area (double)			2

LENGTH: 354 LF

TOTAL LENGTH: 354 LF

401- 70- 3 RESTORE SPALLED AREAS, LATEX MODIFIED MORTAR- ACRYLIC

	Volume (cf)
Railing	50.0
Concrete Deck	48.6
Abutments	24.0
	122.6

TOTAL VOLUME: 122.6 CF

411- 2 (ASPHALT) CRACKS INJECT& SEAL-STRUCTURES REHAB

	Length (LF)
Asphalt	4.0
	4.0

TOTAL LENGTH: 4.0 LF

415- 1- 4 REINFORCING STEEL-SUPERSTRUCTURE

	Volume concrete (cf)	Steel density* (lb/cf)	Steel (lb)
Reinforcing steel	98.6	6	591.6

TOTAL WEIGHT: 592 LB

*Based on similar estimates

Kisinger Campo & Associates, Corp.

Allan Kisinger 1904-1981 engineering • inspection • planning

Project : Ocean Bay Drive Repair
Subject : Estimated Quantities

Calcs : JWG **Date :** 05/14
Check : JLL **Date :** 7/14

415- 1- 5 **REINFORCING STEEL-SUBSTRUCTURE**

	Volume concrete (cf)	Steel density* (lb/cf)	Steel (lb)
Reinforcing steel from spall repair	24.0	6	144.0
			144.0

TOTAL WEIGHT: **144** **LB**

*Based on similar estimates

26.2 Replacement Cost Estimate (Ocean Bay Drive)

CONSTRUCTION COST ESTIMATE

for

OCEAN BAY DRIVE BRIDGE REPLACEMENT

MONROE COUNTY, FLORIDA

Replacement Cost is based on FDOT Historical Bridge Cost per square foot

OCEAN BAY DRIVE

Use cost for short simple span Prestressed Slab Unit Bridge		$160.00
Increase by 3% due to construction over open water	3%	4.80
Increase by 20% due to phased construction	20%	$32.00
Increase by 40% due to work in Monroe County	40%	$64.00

Cost per Square Foot $260.80

Bridge Length (ft)	18
Bridge Width: 24'(Lanes)+4'(Shldr.)+5'(S/W) 1.08'+1.54'(Barriers) (ft)	36
Deck Area (sf)	648
Bridge Cost	$168,998.40
Approach work, approach slab, and incidental items	$300,000.00

TOTAL $468,998.40

V.3LL
7/14

27.0 Pedestrian Bridge (Ocean Bay Drive)

27.1 Repair Cost Estimate (Pedestrian Bridge – Ocean Bay Drive)

CONSTRUCTION COST ESTIMATE

for

PEDESTRIAN BRIDGE (OCEAN BAY DRIVE) REPAIR

MONROE COUNTY, FLORIDA

Item Number	Item Description and		Estimated Quantity	Unit	Unit Price	Total Amount Per Item
PEDESTRIAN BRIDGE (OCEAN BAY DRIVE)						
101- 1	MOBILIZATION	15%	1	LS		$283.50
102- 1	MAINTENANCE OF TRAFFIC (# DAYS)	15%	1	LS		$283.50
458- 1- 21	BRIDGE DECK EXPANSION JOINT, REHABILITATION, POURED JOINT WITH BACKER ROD		12	LF	$120.00	$1,440.00
460- 1- 13	STRUCT STEEL REHAB-BOLT, NUT, WASH & PLT		3	LB	$150.00	$450.00
					CONTINGENCIES 20%	$491.40
					TOTAL	$2,948.40

Kisinger Campo & Associates, Corp.

Allen Kisinger 1904-1981 engineering · inspection · planning

Project : Card Sound Bridge Repair
Subject : Estimated Quantities

Calcs : JWG ~~JLL~~ **Date :** 02/14
Check : JLL **Date :** 7/14

458- 1- 21 **BRIDGE DECK EXPANSION JOINT, REHABILITATION,**

	Number of spans	Width of bridge (ft)	Total length (ft)
Span 1	2	6.000	12.000

TOTAL LENGTH: 12 **LF**

460- 1- 13 **STRUCTURAL STEEL REHAB-BOLT, NUT, WASH & PLT**

Type	Number of Bolts	Weight (lb)	Total Weight (lb)*
2-Pile Cluster	2	1.5	3.0
			3.0

TOTAL WEIGHT: 3 **LB**

28.0 Miscellaneous Calculations

FUTURE REPAIR AND REPLACEMENT COST
MONROE COUNTY

8/28/2014

J. KRG 8/14

Bridge No.	Structure Location	Present Day Repair Cost	Present Day Replacement Cost	Year of Repair Project	Future Repair Cost	Year of Replacement Project	Future Replacement Cost
904025	GARRISON BIGHT	$1,126,841	$3,175,460	2017	$1,499,825	2030	$6,931,631
904110	GEIGER KEY	$482,279	$1,475,478	2018	$706,104	2025	$2,523,568
904120	SIMILAR SOUND	$452,516	$829,183	2015	$497,768	2025	$1,418,184
904140	BAY POINT	$41,760	$360,309	2025	$119,145	2050	$2,086,844
904152	SHORE DRIVE	$7,327	$629,547	2025	$20,905	2065	$7,580,229
904153	SUGARLOAF BOULEVARD	$819,478	$1,386,823	2016	$991,568	2016	$1,528,972
904155	SUGARLOAF CREEK	$436,800	$2,177,760	2025	$1,246,241	2035	$6,067,158
904160	OLD S.R. 4A (CR 939)	$187,621	$1,069,882	2018	$274,696	2035	$2,980,650
904250	CARIBBEAN DRIVE	$23,668	$527,209	2025	$67,527	2035	$1,468,784
904305	WATSON BOULEVARD	$64,556	$545,048	2025	$184,185	2035	$1,518,482
904307	FERN AVENUE	$49,967	$545,987	2025	$142,561	2035	$1,521,098
904310	S.R. 940 - LEG A (WATSON BOULEVARD)	$6,724	$581,664	2030	$30,895	2050	$3,368,891
904320	NO NAME KEY	$2,997,676	$20,400,000	2014	$2,997,676	2025	$34,890,923
904600	TOM'S HARBOR CHANNEL	$24,731	$2,863,229	2025	$70,561	2035	$7,976,848
904602	TRUMAN BRIDGE	$159,439	$1,304,881	2017	$212,213	2020	$1,748,666
904603	BIMINI DRIVE	$136,739	$904,624	2017	$182,000	2020	$1,212,283
904604	HARBOR DRIVE	$438,791	$1,012,932	2017	$584,031	2020	$1,357,426
904606	SEAVIEW DRIVE	$104,213	$1,012,932	2017	$138,708	2020	$1,357,426
904908	VALOIS BOULEVARD	$129,660	$791,034	2018	$189,836	2050	$4,581,525
904910	BAHAMA ROAD	$76,479	$525,331	2018	$111,973	2035	$1,463,553
904980	STEAM BOAT CREEK	$107,613	$3,438,279	2025	$307,032	2035	$9,578,918
904982	TUBBY'S CREEK	$121,001	$1,311,487	2025	$345,231	2035	$3,653,753
904984	MOSQUITO CREEK	$118,037	$1,300,950	2025	$336,773	2035	$3,624,399
904986	SAUNDER'S CREEK	$61,522	$1,249,208	2025	$175,529	2035	$3,480,246
904990	CARD SOUND BRIDGE	$4,876,999	$32,600,000	2015	$5,364,699	2030	$71,161,712
N/A	OCEAN BAY DRIVE	$117,289	$468,998	2018	$171,723	2035	$1,306,612
N/A	PEDESTRIAN BRIDGE (OCEAN BAY DRIVE)	$2,948	N/A	2030	$13,548	2065	N/A

Current Year = 2014

Compound Rate (Repair) = 10.0% Accounts for annual increase of construction unit costs and growth of repair quantities.

Compound Rate (Replacement) = 5.0% Accounts for annual increase of construction unit costs.