Community Development Block Grant –DR
Hurricane Irma Funding Proposal

Infrastructure Repair Program Application

Sands Subdivision Road Elevation and Draining Improvement Pilot Program on Big Pine Key

June 15, 2020

Monroe County
Board of County Commissioners
2798 Overseas Highway
Marathon, Florida 33050

Kevin Wilson, P.E.
Assistant County Administrator

County of Monroe
The Florida Keys

BOARD OF COUNTY COMMISSIONERS
Mayor Heather Carruthers, District 3
Mayor Pro Tem Michelle Coldiron, District 2
Craig Cates, District 1
David Rice, District 4
Sylvia J. Murphy, District 5

June 22, 2020

Gina Herron
Florida Department of Economic Opportunity
Office of Disaster Recovery
The Caldwell Building
107 East Madison Street, MSC-400
Tallahassee, Florida 32399

Dear Mrs. Herron,

It is with great pleasure that Monroe County is resubmitting this application for funding for the *Community Development Block Grant Program-Disaster Recovery, Rebuild Florida: Infrastructure Repair Program (Round 2)*. Monroe County is requesting $8,114,489.48 to raise specified segments of Father Tony Way in the Big Pine Key Sands Subdivision and to construct a storm water collection, treatment, and disposal system. This important residential arterial roadway provides the sole access point for 190 homes in a low-income residential neighborhood. By enhancing this important residential access road, this low-income neighborhood will remain viable for decades.

Big Pine Key sustained a devastating blow from Hurricane Irma with 115 homes sustaining substantial damage (more than 50% of the home is damaged and must be elevated) of the 190 homes located within the project impacted area. This low-lying subdivision is also subject to frequent and persistent flooding due to storms, astronomical high tides, and sea level rise.

Through the Voluntary Home Buyout Program, Monroe County is simultaneously purchasing severely damaged homes, which will be demolished, and the lands developed to support storm water drainage for this road elevation. Selected vacant lots may be used to support the upgraded storm water drainage infrastructure components that will support this road elevation and drainage improvement project.

The *Rebuild Florida* programs are offering an array of community solutions to rebuild a stronger, safer, and more resilient Florida Keys. As an "Area of Critical State Concern" and a rural county, this priority storm water management project strongly emphasizes the grant's purpose to preserve low-income housing while mitigating against future damage to make the community more resilient. This project has also been submitted to the Hazard Mitigation Grant Program (HMGP) for funding. It is currently under review by the Florida Division of Emergency Management. In the event that it is funded, we request that this application be converted to a funding request for HMGP match funds. We encourage you to give this project favorable consideration for funding.

Sincerely,

Roman Gastesi
County Administrator

MONROE COUNTY CDBG-DR

INFRASTRUCTURE REPAIR AND MITIGATION PROGRAM
GRANT APPLICATION

TABLE OF CONTENTS

---

1. Monroe County Cover Letter

2. Monroe County Applicant Form

3. Monroe County Infrastructure Proposal Form

    Appendix A: Contract Plan for Construction Design

    Appendix B: Board of County Commissioner Resolution No. 025-2017 – A Resolution approving Road Improvement Pilot Project in Two Communities

    Appendix C: Board of County Commissioner Resolution No 028-2017 – A Resolution to adopt a road elevation standard

    Appendix D: Public Hearing

    Appendix E: Monroe County Pilot Roads Project Report (January 2017)

4. Monroe County Budget

5. Monroe County Service Area Map

6. Monroe County Work Plan

7. Monroe County Organization Chart and Team Roles

Section 2: Monroe County Applicant Information Form

APPLICANT INFORMATION FORM

LOCAL GOVERNMENT INFORMATION

Local Government Applicant:	Monroe County Board of County Commissioners			Eligible County:	Monroe County
Local Contact:	Deborah London			DUNS #:	0738767570000
Title:	Project Manager		E-mail:	London-Debra@monroecounty-fl.gov	
Mailing Street Address:	102050 Overseas Highway			Phone Number	305-453-8754
City:	Key Largo	State:	Florida	Zip Code:	33037
Executive Official with Authority to Sign Application:	Roman Gastesi			Phone Number	305-292-4644
Title:	County Administrator		E-mail:	Gastesi-Roman@MonroeCounty-Fl.Gov	
Executive Official Address (if different):	1100 Simonton Street				
City:	Key West	State:	Florida	Zip Code:	33040

Please list any other UGLG members of this Application Team, if any:	Contact Person:	Email Address:
Executive Team	Kevin Wilson	Wilson-Kevin@MonroeCounty-fl.gov
Executive Team	Judith Clarke	Clarke-Judith@MonroeCounty-fl.gov

Please confirm you submited a signed resolution authorizing Executive Official to sign application and certifications.	Yes: ☒	No: ☐	

APPLICATION PREPARER INFORMATION

Application Preparation Agency or Firm:	Monroe County Board of County Commissioners		
Contact:	Helene Wetherington, Disaster Recovery Director		
Address:	2798 Overseas Highway		
Phone Number:	305-504-3036	Email:	Wetherington-Helene@MonroeCounty-Fl.gov
Check Type of Agency Preparing Application:	Private Firm: ☐	Government Agency: ☒	
	Regional Planning Council: ☐	Other, specify:	

APPLICATION INFORMATION

Total CDBG-DR $ Requested:	$8,114,489.48			
List jurisdictions for proposed recovery activities (municipalities, Tribal governments, unincorporated areas):	Unincorporated Monroe County - Big Pine Key, Florida			
Please confirm the local government covered by the National Flood Insurance Program?	Yes:	☒	No:	☐
Please confirm the proposed activities are consistent with the local comprehensive plan?	Yes:	☒	No:	☐

Section 3: Monroe County Infrastructure Proposal Information Form

PROPOSAL INFORMATION FORM

Applicant Project	Sands Subdivision - Road Elevation and Drainage Improvement Project	Date:	04-27-2020
Name Location	Sands Subdivision (Big Pine Key), Monroe County, Florida		
Address Project	Father Tony Way between Avenue D and Avenue J, Big Pine Key, Florida		
Description	This pilot program will repair roads and develop innovative storm-water solutions t		
Total CDBG DR Funds Requested	$ 8,114,489.48	Use Budget template to calculate total units served and estimated CDBG-DR funds per unit	

I. CDBG DR THRESHOLD COMPLIANCE

NOTE: DEO will not approve proposals where a CDBG-DR National Objective is not met and Eligible Activities are not included.

A. National Objective: Please mark "**Yes**" in box next to which National Objective:

[Yes] Low- / Mod-Income Area [ ] Urgent Need

1 List all the Florida Congressional and Legislative districts to be serviced by this project.

FL-26 House	SLSD 39	SLHD 120			

2 List the total population, Low-Mod population and the percent of the population that is Low Mod for the service area.

Total Service Area Population: 190 # Low-Mod Income Households: 150 % Low-Mod Households: 78.9%

3 Provide a brief description of how the service area was determined.

This project will repair damage from Hurricane Irma for 1,693 linear feet of Father Tony Way and install a "pump and treat" storm water drainage system. This pilot project is designed to protect the only access road to a low lying, low income subdivision that is subject to frequent and persistent flooding due to storms, tides, and sea level rise. It will maintain access to 190 low income residential structures of which 115 homes sustained substantial damage due to Hurricane Irma.

B. Eligible Activity

Please mark "Yes" in box next to the ***Eligible Activity*** your program or project will serve:

- [✔] Restoration of infrastructure (e.g. water and sewer facilities, streets, generators, debris removal, drainage, bridges, etc.);
- [ ] Public facilities such as emergency community shelters;
- [ ] Demolition, rehabilitation of publicly or privately owned commercial or industrial buildings; and
- [ ] Re-nourishment of protective coastal dunes systems

Please mark "Yes" to specify ***Vulnerable Populations*** to be served:

- [ ] Transitional housing, permanent supportive housing, and permanent housing needs of individuals and families that are homeless and at-risk of homelessness
- [✔] Prevention of low-income individuals and families with children from becoming homeless
- [ ] Special needs of persons who are not homeless but require supportive housing

C. Unmet Needs

NOTE: *All CDBG-DR activities must clearly address an impact of the disaster. Mitigation or preparedness activities that are not part of rebuilding efforts are generally ineligible as CDBG-DR recovery activities.*

Unmet Need Tied to the Hurricane Irma Disaster Event.

Describe how the proposed activity will address an Unmet Need tied to the impact of damage from the disaster.

1 This project will mitigate the residential access roads and improve drainage in a Hurricane Irma highly impacted Big Pine Key low-lying subdivision subject to frequent and persistent flooding due to a variety of causes. The project includes segments of road repair as well as drainage enhancements installed to assist in the removal of flood waters, keeping roads open and displaced flood water out of private and and public property. The loss of any additional residential structures, in the aftermath of Hurricane Irma's devastating blow to the housing stock, must be prevented. Identifying viable storm water management solutions, in the wake of increasing tropical storm activity and rising sea levels is an absolute priority for Monroe County.

2 Describe how proposed program or project primarily addresses **Unmet Housing Needs** as specified in CDBG-DR Action Plan.

The Sands (Big Pine Key) Subdivision of Monroe County, faces issues with tidally-influenced inundation of residential access roads at frequent events, which was exacerbated with Hurricane Irma. When this flooding occurs, residents are either trapped or prevented from reaching their homes. Frequent, sustained saltwater inundation can damage roads, infrastructure, and private homes. Public and private vehicles experience severe damage and shortened live spans due to the repeated salt water exposure. Blocked streets create traffic congestion, which in turn delays business and causes other commercial interruption. Emergency response times are increased, escalating the risk of the citizens of these subdivisions, as well as the County as a whole. While tropical storms create significant problems, the slow and imperceptible rise in sea level tides blocks streets and inundate ocean waters into homes on a monthly, or more frequent, basis.

3 Specify Units and Funding **Serving LMI Populations** and **Cost Benefit Analysis**

Proposed CDBG-DR Contract Amount	Total Estimated Units	Maximum CDBG-DR Assistance Per Unit	% of Units Serving LMI Populations	# Units Serving LMI Populations	Grant $ Serving LMI Populations
$ 8,114,489.48	190	$ 42,708	78.9%	150	$6,402,332

4 Describe how proposed program or project **primarily serves Low- and Moderate-Income populations** as specified in CDBG DR Action Plan.

A. This Sands Subdivision is designated as low and moderate income tract with a 78.49 percentage LMI.
Father Tony Way is the only road which provides access to 82 residential LMI units within the community. Additional there are 104 LMI homes in the area which are within the greater Drainage Basic Area of this project. When the traffic access area and the drainage basic are combined, there are a total of 150 LMI units ultimately impacted by this this project.

5 **Infrastructure Improvements**, provide a brief description of how proposed improvements **primarily serves housing serving Low- and Moderate-Income populations** as specified in CDBG-DR Action Plan.

This project would test the ability to combine roadway repair and drainage improvement to alleviate the loss of roads, access, and saltwater inundation impacts to this low income neighborhood. The proposed project area is partially located within the within the VE 9, VE 10 and VE 11 FIRM Flood Hazard Areas. It is considered highly likely to be inundated by sea level rise. Hurricane Irma substantially damaged 115 homes in the project area. This area also contains numerous homes with repetitive loss. This project seeks engineering solutions to keep the neighborhood viable for long-term residential populations by providing access and protecting the neighborhood from continuous saltwater inundation. Improvements in drainage will improve navigability of the roads and facilitate ingress and egress (evacuations) from the area which was difficult immediately pre & post Irma. Outside of disaster operations these improvements also improve the chances that the remaining housing in this LMI neighborhood will continue to be viable, and it will improve the chances of some replacement housing will be developed in the area. Without these improvements the long term viability of this neighborhood is questionable (especially when storms threaten).

6 Describe how the proposed infrastructure improvements aligns with local mitigation and resilience plans.

Through the Monroe County Comprehensive Plan, the leadership has demonstrated a strong commitment to enforcing Floodplain management strategies as well as embracing a better understanding and taking action to reduce the affects of climate change. The County's approved the GreenKeys! Sustainability Action Plan ("GreenKeys! Plan") which made recommendations to address climate and sustainability issues throughout the County. Furthermore, Monroe County continues to focus efforts to enhance their rating with the National Flood Insurance Community Rating System. Monroe County working in partnership with the academic and private sector developed a methodology to prioritize the most vulnerable roadways to flooding with the goal of creating a technical process for harmonizing future sea level rise impacts. This project represents one of two pilot projects which were identified during this process and were approved by the Board of County Commissioners in 2017. The report has been included in this application.

II. MANAGEMENT CAPACITY

1 Describe roles of key staff, contractors and/or vendors in operations management of the proposed CDBG-DR funded program and/or project. List any additional staff to be hired and/or procured and for what roles.

Judith Clarke, P.E. Director of Engineering Services, Monroe County - Grant Administrator
Debra London, Engineering Services, Monroe County - Project Manager
Marty Slavik, Lower Keys Roads and Bridges Supervisor, Monroe County - Road Maintenance
Paul Wunderlich, Monroe County Construction Inspector - Project Inspections
Olympia Newton, Monroe County Senior Engineering Technician - Invoicing and Reimbursement processing
WSP USA, Inc. - Engineer of Record Consultant for design - currently in progress
Construction Contractor - to be determined through competitive construction bid process meeting FDOT requirements including contractor FDOT certification
Construction Engineering and Inspection Consultant - to be determined through competitive qualifications based solicitation for Professional Services utilizing FDOT approved process

2 a. What is the ***experience and capacity of key members of the management team***?

Judith Clarke - Florida licensed Professional Engineer with over 14 years County experience managing $23 million County roads and bridges construction and maintenance 5 year capital program and has extensive experience with FEMA, FHWA, FDEP, FDOT grant administration.
Debra London - Florida Certified Contract Manager -Project manager in the County roadway improvement program - responsible for contracts, including consultant design solicitation and selection, construction bid documents, construction engineering and inspection services consultant solicitation and selection, construction project administration, cost estimate analysis, coordination with State and Federal agencies, Engineers and Contractors. Grants Application and Administration experience includes - CDBG, FEMA, FHWA, FDEP, FDOT.
Marty Slavik - Lower Keys Road Maintenance Supervisor. Responsible for road maintenance including County Right of Way, road shoulders, and road clearing post storm recovery, responding to homeowner complaints regarding flooding.

The County requires contractors to be FDOT pre-qualified but the competitive bid process that we utilize for both construction bids and procurement of professional services is Monroe County's procurement process, which is in conformance with FL statutes and the consultant competitive qualification/negotiation process. Monroe County has been Local Agency Program (LAP) certified by FDOT District 6 since 2010 and as such its policies and procedures comply with Federal Highway Administration requirements.

b. Describe any projects comparable to the one in this application that the applicant has administered in the last five (5) years.

Key Largo I - 11,755 linear feet roadway with 68 drainage structures, Construction Cost=$2,045,052
Key Largo II - 14,870 linear feet of roadway with 36 drainage structures, Construction Cost=$1,516,502
Lake Surprise Estates- 13,450 linear feet of roadway with 100 drainage structures, Construction Cost=$3,003,393;
Sexton Cove Estates - 12,297 linear feet of roadway with 19 drainage structures, Construction Cost=$1,102,540.
Key Largo III - in design phase, Design cost = $349,095.
1st Bertha Street - in design phase, Design cost = $471,621.
Sea Level Rise Pilot - in design phase, Design cost = $517,518.

c. Please provide an assessment of what worked well, what needed improvement and steps taken to resolve such capacity gaps.

In 2017, the Monroe County Board of County Commissioners passed a resolution to adopt the Tidal Flooding Roads Demonstration Project which provided a framework for making road elevation decisions relative to ongoing roadway improvement projects. As a proactive example, the Lake Surprise Estates project was in the final stages of design at this time. The County instructed the engineer of record to modify the design to raise the roads based on the king tide and sea level rise data available. The County has incorporated the sea level rise data into all roadway and drainage improvements projects. The 2020 fiscal year Road and Bridge budget is $13,760,000.

3 If the management team is not fully formed, please provide a description of the ***procurement process*** the Applicant will follow to cultivate program and project management capacity.

Other than the construction phase, the management team is fully formed.
Construction Contractor - to be determined through competitive construction bid process meeting FDOT requirements including contractor FDOT certification.
Construction Engineering and Inspection Consultant - to be determined through competitive qualifications based solicitation for Professional Services utilizing FDOT approved process.

4 If allocated CDBG-DR funds and if needed, what is your strategy to augment staff and operations management capacity? What is your plan for program and project management in terms of hired staff, contractors and/or vendor?

Not required. County staff is sufficient to efficiently and effectively manage the project. Monroe County requires contractors to be FDOT pre-qualified. Monroe County's procurement process is in conformance with FL statutes. Monroe County has been Local Agency Program (LAP) certified by FDOT District 6 since 2010 and as such its policies and procedures comply with the Federal Highway Administration requirements. Monroe County has the proven experience administering projects with federal funds in conformance with federal requirements.

✓ Organization Charts and description of roles are encouraged, but not required for this Application.

5 **Citizen Complaint Policy**

Does the applicant have a citizen complaint policy, acquisition and relocation policy, housing assistance plan and procurement policy in place that meets HUD guidelines?

Yes	Citizen Complaint Policy
No	Acquisition and Relocation Policy
Yes	Housing Assistance Plan
	Procurement Policy

As this is a requirement for funding, please see the CDBG website for examples: http://floridajobs.org/docs/default-source/office-of-disaster-recovery/hurricane-irma/irma-comprehensive-policies-and-procedures-draft-5-3-2019.pdf?sfvrsn=2

III. READINESS TO PROCEED

A. Select "Yes" or "No" for key factors achieved to support that the program or project is ready to proceed:

		Supporting Documentation
Site Control:	Yes	design phase contract in progress
Zoning & Community Approval:	Yes	design phase contract in progress
Environmental Clearance:	Yes	design phase contract - SFWMD and other permitting at
Procured and Contracted Members of Development and Construction Team:		Design Contract has been included, N0 construction tear
Commitment of Matching Funds:		NA

B. Describe any issues and proposed solutions to address Readiness To Proceed:

No issues - design completion currently at 90%. See attached design.

C. Confirm you submitted a **Production Work Plan** that shows on a month-by-month basis how much time and staff needed to achieve key Milestones

IV. COST REASONABLE BUDGET

A. Proposal budgets must reflect cost reasonableness and affirmative efforts to leverage CDBG-DR funds with additional funding to address unmet needs. Budget narrative reflects research, quotes and/or contracted pricing for proposed programs and projects.

Provide a **Budget Narrative** that describes:

1. Cost estimates and sources of funding. Approach to managing and paying for proposed program or project.

A detailed cost estimate is described in the Monroe County Pilot Roads Project Final Report dated January 2017 on page 18. (Appendix F). Estimated costs for raising the roads and installation of pump stations are based on historical costs of roadway improvement projects maintained by the County and the Florida Department of Transportation (FDOT) regional historical costs and the Engineer of Record cost is $8,114,489.48. A detailed cost estimate has been included in Section 4. Monroe County Budget.

2. Basis of cost estimates and method for generating cost reasonable budget. Provide quotes, bids, schedules and/or estimates from other comparable projects.

Engineer of Record current estimate provided at 60% design phase. Design complete February 2020.
Sea Level Rise Pilot Project - Sands Subdivision, Big Pine Key - construction and construction engineering and inspection services estimated at $ 8,114,489.48 for 1,693 linear feet of roadway, elevated to approximately 11 inches, and 25 drainage structures and related pump station. A cost estimate is included in Section 4. Monroe County Budget.

3. Description of how proposed project shall not duplicate benefits as specified in CDBG-DR Action Plan.

No duplication of benefits.

B. Leverage and Committed Additional Sources.

Source	Amount	Committed (Yes / No)	If not committed, list status towards reaching commitment
NA	NA	NA	NA
total:			▪ List $ value of Waiver of Local Impact Fees if available.

If additional funds committed, provide copies of commitment letters or other evidence of commitment.	☐Yes	■No
Confirm that the proposed funding request is for **FEMA PA program or project match** and submit PA commitment	☐Yes	■No

V. STORM DISASTER RESILIENCE

1 Describe how the proposed CDBG DR-funded program and/or project will pro-actively invest in resilience to damage from future storms as specified in the Federal Register and Action Plan.

Monroe County, Florida is the southern most county in the continental US and is largely comprised of low lying, porous islands extending some 112 miles southwest. The land masses are actually the exposed portion of an ancient coral reef. Because of the low elevation of the island land masses in relation to building structures, flooding occurs. The flooding is exacerbated by tropical storms and hurricanes with a combination of onshore winds, ground swell, and abnormally high tides that inundate neighborhoods, covering the roads and making transportation through these areas difficult, dangerous, and costly due to the corrosive effects of the salt water. In response Monroe County working with partners in the academic and private sector, developed methodology whereby it could prioritize the lowest section of roads most vulnerable to a given level of flooding and by seeking the areas of common elevation together, achieve quantifiable reductions in street flooding for thousands of residents coined the pilot road project.

VI. SUPPORTING DOCUMENTATION

A. Service Area Maps

For Infrastructure and Economic Revitalization proposals, please provide a Map with an overlay that clearly shows:

1	Project Location and/or Service Area	Included
2	Low- and Moderate-Income Service Area	Included
3	Most Recent Flood Plain Map	Included

B. Other Considerations

Describe any other regulatory reviews such as Federal or State review or regulatory system which may have jurisdiction over the proposed activity(s), such as, federal programs of the Corps of Engineers and the Environmental Protection Agency; and State programs.

VI. CERTIFICATION

As authorized Executive Officer, I certify that staff, contractors, vendors and community partners of our storm recovery initiative:

A. Will comply with all HUD and Florida requirements in the administration of the proposed CDBG-DR funded activities;

B. Will work in a cooperative manner to execute the Subrecipient Agreement that provides the pathway for successful CDBG-DR program(s) and/or project(s) and;

C. Certify that all information submitted in this Application is true and accurate.

Signature: _____ _____

Name: _____ Date

Appendix A: Contract Plan Ŧ2ℕ /2y˜ãűℕJdzŎűƛ2y˜ 5ŜăƛƎy˜

MONROE COUNTY
DEPARTMENT OF ENGINEERING

CONTRACT PLANS

SEA LEVEL RISE ROADWAY AND DRAINAGE PILOT PROJECT
KEY LARGO AND BIG PINE KEY

VOLUME B - BIG PINE KEY

INDEX OF SHEETS - VOLUME B

SHEET NO.	SHEET DESCRIPTION
G-1B	KEY SHEET
SQ-1B	SUMMARY OF PAY ITEMS
SD-1B	SUMMARY OF DRAINAGE STRUCTURES
G-2B	TYPICAL SECTIONS
G-3B	PROJECT LAYOUT
G-4B	SPECIAL DETAILS
G-5B - G-9B	PROJECT NOTES
SW-1B - SW-4B	STORMWATER POLLUTION PREVENTION PLANS
RD-1B - RD-6B	ROADWAY PLAN & PROFILE (FATHER TONY WAY)
RD-7B	ROADWAY PLAN & PROFILE (AVE J)
RD-8B	ROADWAY CROSS SECTIONS LAYOUT
RD-9B - RD-12B	ROADWAY CROSS SECTIONS (FATHER TONY WAY)
RD-13B	ROADWAY CROSS SECTIONS (AVE J)
TC-1B - TC-3B	TRAFFIC CONTROL PLANS
SP-1B	SIGNING PAVEMENT MARKING DETAILS
PS-1B	DRAINAGE MAP
PS-2B	PUMP STATION SITE PLAN
PS-3B	PUMP STATION MECHANICAL LAYOUT
PS-4B - PS-9B	FORCE MAIN PLAN & PROFILE
PS-10B - PS-13B	INJECTION WELL PLAN & PROFILE
PS-14B	INJECTION WELL DETAIL
PS-15B	A.A.R.V. DETAIL
E-1B	GENERAL ELECTRICAL NOTES AND ELECTRICAL REQUIREMENTS
E-2B	PROPOSED ELECTRICAL SITE PLAN
E-3B	ONE LINE DIAGRAM
E-4B -E-5B	PUMP CONTROL PANEL
E-6B -E-9B	CONTROL PANEL ELECTRICAL SCHEMATIC
S-1B	PUMP STATION LAYOUT
S-2B	WET WELL PLAN AND SECTIONS
S-3B	VALVE BOX PLAN AND SECTIONS
S-4B	TREATMENT UNIT PLAN AND SECTIONS
S-5B	INLET BOX PLAN AND SECTIONS

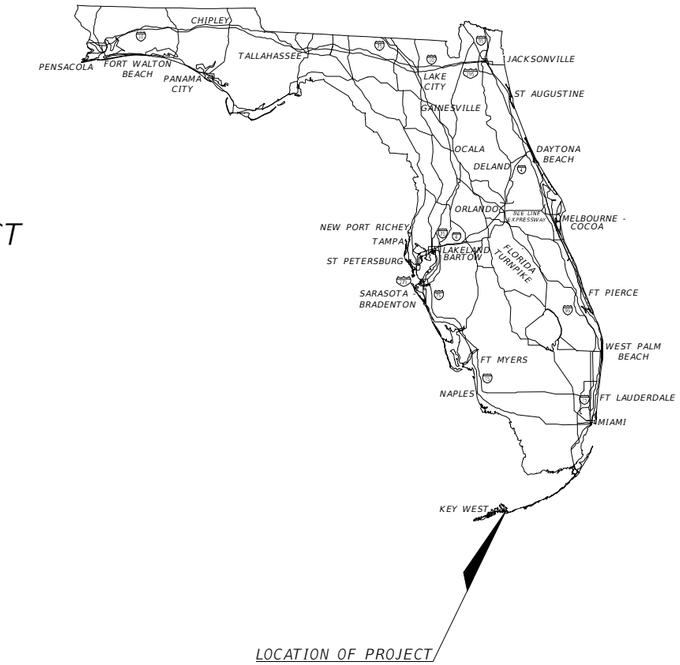

LOCATION OF PROJECT

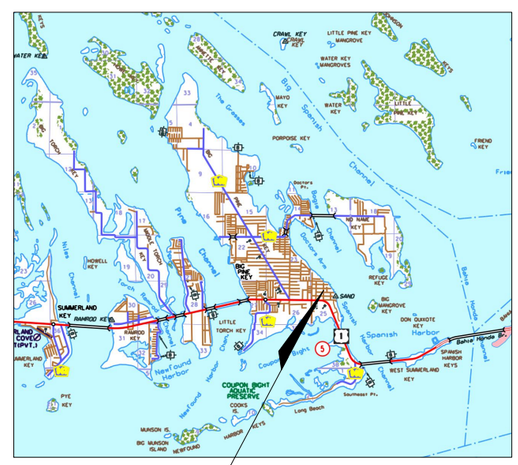

LOCATION OF PROJECT

N

0 1 2
Miles

PLANS PREPARED BY:

WSP USA
7650 CORPORATE CENTER DRIVE, SUITE 300
MIAMI, FLORIDA 33126
C.A. # 01462

NOTE: SCALE SHOWN ON DRAWINGS CORRESPONDS TO PLOT SIZE 11"X17". IF DRAWINGS ARE PLOTTED ON OTHER SIZE SHEET, ENGINEER OF RECORD DOES NOT WARRANT ACCURACY OF DRAWING SCALE.

90% SUBMITTAL
NOT FOR CONSTRUCTION

ROADWAY PLANS
ENGINEER OF RECORD: ANDRES CARDONA, P.E.
P.E. NO.: 63917

GOVERNING STANDARD PLANS:
Florida Department of Transportation, FY 2019-20 Standard plans for Road and Bridge Construction and applicable Interim Revisions (Irs).

Standard Plans for Road Construction and associated Irs are available at the following website:
https://www.fdot.gov/design/standardplans

GOVERNING STANDARD SPECIFICATIONS:
Florida Department of Transportation, July, 2019 Standard Specifications for Road and Bridge Construction at the following website:
http://www.fdot.gov/programmanagement/Implemented/SpecBooks

MONROE COUNTY BOARD OF COMMISSIONERS:

SYLVIA MURPHY (MAYOR)	DISTRICT 5
DANNY KOLHAGE (MAYOR PRO TEAM)	DISTRICT 1
HEATHER CARRUTHERS	DISTRICT 3
DAVID RICE	DISTRICT 4
MICHELLE COLDIRON	DISTRICT 2

PROJECT LENGTH IS BASED ON ℄ CONSTRUCTION

LENGTH OF PROJECT		
	LINEAR FEET	MILES
ROADWAY	1676.48	0.318
BRIDGES	0	0
NET LENGTH OF PROJECT	1676.48	0.318
EXCEPTIONS	0	0
GROSS LENGTH OF PROJECT	1676.48	0.318

MONROE COUNTY PROJECT MANAGER: DEBRA LONDON

FISCAL YEAR	SHEET NO.
19	G-1B

THE OFFICIAL RECORD OF THIS SHEET IS THE ELECTRONIC FILE DIGITALLY SIGNED AND SEALED UNDER RULE 61G15-23.004, F.A.C.

MONROE COUNTY
SEA LEVEL RISE ROADWAY AND DRAINAGE PILOT PROJECT - BIG PINE KEY
SUMMARY OF PAY ITEMS

PAY ITEM NO.	ITEM DESCRIPTION	UNIT	QUANTITY
101-1	MOBILIZATION	LS	1.00
102-1	MAINTENANCE OF TRAFFIC	DA	120.00
104-10-3	SEDIMENT BARRIER	LF	277.92
104-18	INLET PROTECTION	EA	29.00
110-1-1	CLEARING & GRUBBING	AC	1.18
120-1	REGULAR EXCAVATION	CY	27.30
120-6	EMBANKEMENT	CY	5.00
160-4	STABILIZATION TYPE B	SY	378.72
285-704	OPTIONAL BASE, BASE GROUP 04	SY	378.72
286-1	TURNOUT CONSTRUCTION	SY	43.78
327-70-5	MILLING EXIST ASPH PAVT, 2" AVG DEPTH	SY	5498.12
334-1-11	SUPERPAVE ASPHALTIC CONC, TRAFFIC A	TN	600.60
530-74	BEDDING STONE (NO. 57 STONE)	TN	272.82
570-1-2	PERFORMANCE TURF, SOD	SY	1397.11
700-1-60	SINGLE POST SIGN, RELOCATE	AS	14.00
706-3	RETRO-REFLECTIVE PAVEMENT MARKERS	EA	26.00
711-11-125	THERMOPLASTIC, STANDARD, WHITE, SOLID 24"	LF	194.06
711-16-201	THERMOPLASTIC, STANDARD-OTHER SURFACES, YELLOW, SOLID, 6"	GM	0.06
711-16-231	THERMOPLASTIC, STANDARD-OTHER SURFACES, YELLOW, SKIP, 6"	GM	0.25
10-50-16-003	UTILITY PIPE,REMOVE & DISPOSE, 5-7.9"	LF	420.00
1050-51-206	6" WM DI PIPE FURNISH & INSTALL	LF	420.00
425-5	Adjust Manhole (Utilities) (Top Adjustment)	SY	2.00
120-1	REGULAR EXCAVATION	CY	4066.00
448-73	PUMP STATION DRAINAGE	LS	1.00
	FURNISH AND INSTALL PUMPS: FLYGT MODEL LL3602/845	EA	4.00
	FURNISH AND INSTALL CONTECH TREATMENT UNIT: MODEL CDS5678	EA	1.00
	ELECTRICAL (INCL VFD, ELECT SERVICE, ETC.)	LS	1.00
0125-3	SELECT BEDDING MATERIAL	CY	395.00
1050-51224	UTILITY PIPE-DUCTILE IRON/CAST IRON, FURNISH & INSTALL, WATER/SEWER, 24"	LF	578.00
1050-51230	UTILITY PIPE-DUCTILE IRON/CAST IRON, FURNISH & INSTALL, WATER/SEWER, 36"	LF	456.00
	UTILITY PIPE-DUCTILE IRON/CAST IRON, FURNISH & INSTALL, WATER/SEWER, 48"	LF	477.00
1080-29124	UTILITY FIXTURE, MECHANICAL JOINT RESTRAINT, FURNISH & INSTALL, 24"	EA	30.00
1080-11509	UTILITY FIXTURES, F&I, 20-49.9", MECHANICAL JOINT RESTRAINT	EA	18.00
1055 51124	UTILITY FITTINGS, DUCTILE IRON/CAST IRON, FURNISH AND INSTALL ELBOW, 24"	EA	14.00
	UTILITY FITTINGS, DUCTILE IRON/CAST IRON, FURNISH AND INSTALL ELBOW, 36"	EA	4.00
	UTILITY FITTINGS, DUCTILE IRON/CAST IRON, FURNISH AND INSTALL ELBOW, 48"	EA	5.00
1055-11425	UTILITY FITTING,F&I,DI/CI,TEE,20-49.9"	EA	12.00
1055-51524	UTILITY FITTINGS, DUCTILE IRON/CAST IRON, FURNISH & INSTALL, CAP/PLUG, 24"	EA	1.00
1055-11435	UTILITY FITTINGS, F&I, DI/CI, REDUCER, 20 - 49.9"	EA	3.00
1080-24124	UTILITY FIXTURE, VALVE ASSEMBLY, FURNISH AND INSTALL, 24" FOR GATE AND SWING VALVES	EA	20.00
1080-24102	UTILITY FIXTURE, VALVE ASSEMBLY, FURNISH AND INSTALL, 2"	EA	2.00
1050-16002	UTILITY PIPE,REMOVE & DISPOSE, 2-4.9"	LF	300.00
425-1541	INLETS, DT BOT, TYPE D <10'	EA	29.00
425-2-71	MANHOLES, J-7 <10'	EA	11.00

PAY ITEM NO.	ITEM DESCRIPTION	UNIT	QUANTITY
425-2-72	MANHOLES, J-7 >10'	EA	1.00
425-2127	DRAINAGE MANHOLE, UTILITY CONFLICT STRUCTURE	EA	1.00
430-173-115	PIPE CULVERT, OPTIONAL MATERIAL ROUND, 15" SD	LF	30.00
430-173-118	PIPE CULVERT, OPTIONAL MATERIAL ROUND, 18" SD	LF	341.00
430-173-124	PIPE CULVERT, OPTIONAL MATERIAL ROUND, 24" SD	LF	1426.00
430-173-136	PIPE CULVERT, OPTIONAL MATERIAL ROUND, 36" SD	LF	151.00
	FURNISH AND INSTALL INJECTION WELLS AND ANCILLARY EQUIPMENT (EXCEPT GATE VALVES)	LS	12.00
0400-4-25	SUPPORT OF EXCAVATION-COFFERDAM	LS	1.00
0400-4-25	CONCRETE-PUMP STATION	CY	269.40
0415-1-6	MISCELLANEOUS STEEL-PUMP STATION	LB	80990.52

PAY ITEMS NOTES:

1. PAY ITEM MEASUREMENTS ARE PER FDOT STANDARD SPECIFICATIONS.
2. 286-1: INCLUDES COST OF
   XXX SY BRICK DRIVEWAYS
   XXX SY GRAVEL DRIVEWAYS
   XXX SY ASPHALT DRIVEWAYS
   XXX SY CONCRETE DRIVEWAYS
3. 448-73: INCLUDES STRUCTURAL, ELECTRICAL AND ANCILLARY EQUIPMENT

* REFER TO DETAIL ON SHEET PS-8A

THE OFFICIAL RECORD OF THIS SHEET IS THE ELECTRONIC FILE DIGITALLY SIGNED AND SEALED UNDER RULE 61G15-23.004, F.A.C.

REVISIONS			
DATE	DESCRIPTION	DATE	DESCRIPTION

ANDRES CARDONA, P.E.
P.E. LICENSE NUMBER 63917
WSP USA, 7650 CORPORATE CENTER DRIVE,
SUITE 300, MIAMI, FLORIDA 33126
CERTIFICATE OF AUTHORIZATION 01462

SEA LEVEL RISE ROADWAY AND DRAINAGE PILOT PROJECT (KEY LARGO AND BIG PINE KEY)
MONROE COUNTY - DEPARTMENT OF ENGINEERING

SUMMARY OF PAY ITEMS

SHEET NO. SQ-1B

SUMMARY OF DRAINAGE STRUCTURES

STR. NO.	STATION	OFFSET (FT)	SIDE	DESCRIPTION	RIM	NORTHING	EASTING	BOT.	INVERT BACK	INVERT AHEAD	INVERT LEFT	INVERT RIGHT
IW-1	10+10.40	18.63	R	Injection Well	2.92	122961.58	542013.44	-6.50				
IW-2	10+85.97	37.44	L	Injection Well	2.93	123038.08	541958.63	-5.50				
IW-3	12+31.09	18.41	R	Injection Well	2.23	123182.25	542016.90	-7.00				
IW-4	13+22.59	50.74	L	Injection Well	2.42	123274.89	541949.28	-5.00				
IW-5	14+09.25	18.58	R	Injection Well	1.31	123360.38	542020.03	-7.00				
IW-6	15+09.74	18.58	R	Injection Well	1.10	123460.86	542021.71	-7.80				
IW-7	16+20.52	15.41	L	Injection Well	0.78	123572.20	541988.57	-7.00				
IW-8	17+41.67	15.29	L	Injection Well	0.86	123693.34	541990.71	-7.00				
IW-9	18+98.25	16.74	L	Injection Well	0.91	123849.92	541991.88	-7.00				
IW-10	20+00.50	14.31	L	Injection Well	1.03	123952.11	541996.01	-6.00				
IW-11	21+62.42	14.23	L	Injection Well	0.93	124114.01	541998.78	-6.00				
IW-12	23+18.63	14.27	L	Injection Well	0.89	124270.20	542001.35	-10.25				
S-01	9+77.47	49.73	R	Manhole	1.08	122928.14	542043.99	-8.20	-6.20		-6.20	
S-02	9+77.54	18.28	R	Manhole	2.60	122928.74	542012.54	-6.66			-6.19	-6.19
S-03	9+77.49	17.59	L	Manhole	2.60	122929.29	541976.67	-6.63		-6.18		-6.18
S-04	10+69.84	17.53	L	Inlet	2.40	123021.62	541978.27	-6.23	-6.15	-6.15		-3.00
S-05	10+72.39	18.12	R	Inlet	2.40	123023.58	542013.96	-2.98			-2.90	
S-06	12+06.12	15.58	L	Inlet	2.20	123157.85	541982.50	-6.18	-6.10	-6.10		-3.20
S-07	12+10.70	17.13	R	Inlet	2.20	123161.89	542015.28	-3.18			-3.10	
S-08	13+04.62	15.58	L	Inlet	2.00	123256.33	541984.14	-6.15	-6.07	-6.07		-3.40
S-09	13+05.28	16.68	R	Inlet	2.00	123256.46	542016.41	-3.38			-3.30	
S-10	13+68.71	15.58	L	Inlet	1.40	123320.42	541985.21	-6.14	-6.06	-6.06		
S-11	14+39.91	15.58	L	Inlet	1.20	123391.61	541986.40	-6.15	-6.07	-6.05		-4.80
S-12	14+39.87	16.64	R	Inlet	1.20	123391.03	542018.61	-4.78			-4.70	
S-13	15+42.03	15.58	L	Inlet	1.10	123493.71	541988.10	-6.07	-5.99			-5.95
S-14	15+44.00	16.34	R	Inlet	0.90	123495.15	542020.05	-5.98		-5.78	-5.90	
S-15	15+77.46	15.91	R	Conflict Manhole	1.17	123528.63	542019.16	-4.83	-5.75	-5.65		
S-16	16+39.81	16.57	L	Inlet	0.50	123591.52	541987.73	-5.18				-5.10
S-17	16+38.18	17.00	R	Inlet	0.70	123589.33	542021.27	-5.68	-5.60	-5.40	-5.20	
S-18	17+69.77	16.60	L	Inlet	0.85	123721.45	541989.87	-5.18		-5.10		
S-19	17+73.38	16.87	R	Inlet	0.85	123724.51	542023.40	-5.37	-5.29	-5.29	-5.20	
S-20	18+43.96	14.57	L	Inlet	0.87	123795.60	541993.13	-4.88				-4.80
S-21	18+43.85	16.11	R	Inlet	0.87	123794.98	542023.81	-5.08	-5.00	-5.00	-4.90	
S-22	19+59.39	16.79	L	Inlet	0.75	123911.05	541992.84	-4.78				-4.70

STR. NO.	STATION	OFFSET (FT)	SIDE	DESCRIPTION	RIM	NORTHING	EASTING	BOT.	INVERT BACK	INVERT AHEAD	INVERT LEFT	INVERT RIGHT
S-23	19+59.62	16.11	R	Inlet	0.70	123910.73	542025.74	-4.97	-4.89	-4.89	-4.80	
S-24	20+14.59	16.79	L	Inlet	1.05	123966.25	541993.76	-4.38				-4.30
S-25	20+15.91	17.38	R	Inlet	0.85	123967.00	542027.95	-4.91	-4.83	-4.50	-4.40	
S-26	20+75.43	16.77	L	Inlet	1.05	124027.08	541994.80	-3.68				-3.60
S-27	20+74.87	16.18	R	Inlet	1.00	124025.96	542027.73	-4.53	-4.45	-3.74	-3.70	
S-28	22+10.72	16.77	L	Inlet	0.85	124162.35	541997.05	-3.48				-3.40
S-29	22+10.71	20.18	R	Inlet	0.85	124161.73	542033.99	-3.68	-3.60	-3.60	-3.50	
S-30	23+50.67	13.13	L	Inlet	0.70	124302.22	542003.03	-3.68		-3.60		-3.60
S-31	23+50.87	17.80	R	Inlet	0.80	124301.90	542033.95	-3.68	-3.60		-3.60	
S-32	24+81.84	13.25	L	Inlet	0.53	124433.37	542005.10	-3.68	-3.60			-3.10
S-33	24+74.68	18.62	R	Inlet	0.54	124425.68	542036.84	-3.18			-3.10	

NOTE:
1. INLETS AND MANHOLES TO BE PER F.D.O.T. INDEX NO. 425-001 & 425-010.
2. CONFLICT MANHOLE TO BE PER F.D.O.T. INDEX NO. 425-080.
3. ALL STRUCTURES ARE LOCATED IN FATHER TONY WAY.

THE OFFICIAL RECORD OF THIS SHEET IS THE ELECTRONIC FILE DIGITALLY SIGNED AND SEALED UNDER RULE 61G15-23.004, F.A.C.

REVISIONS

DATE	DESCRIPTION	DATE	DESCRIPTION

ANDRES CARDONA, P.E.
P.E. LICENSE NUMBER 63917
WSP USA, 7650 CORPORATE CENTER DRIVE, SUITE 300, MIAMI, FLORIDA 33126
CERTIFICATE OF AUTHORIZATION 01462

SEA LEVEL RISE ROADWAY AND DRAINAGE PILOT PROJECT (KEY LARGO AND BIG PINE KEY)
MONROE COUNTY - DEPARTMENT OF ENGINEERING

SUMMARY OF DRAINAGE STRUCTURES

SHEET NO. SD-1B

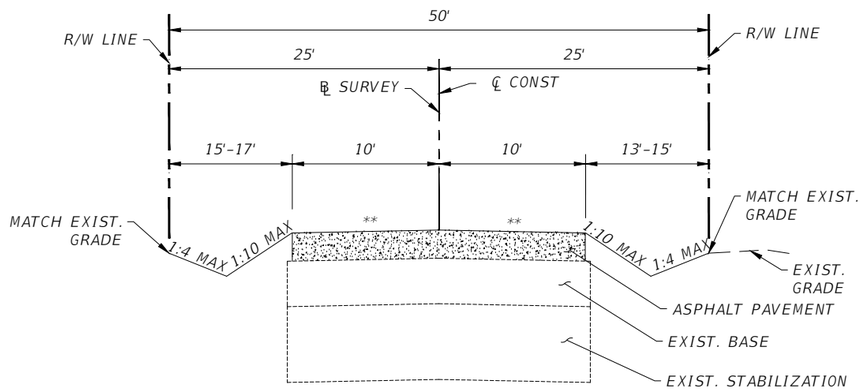

TYPICAL SECTION - FATHER TONY WAY
MILLING, RESURFACING & OVERBUILD, NTS

STA. 18+25.61 TO STA. 19+59.61
STA. 23+19.64 TO STA. 25+20.06

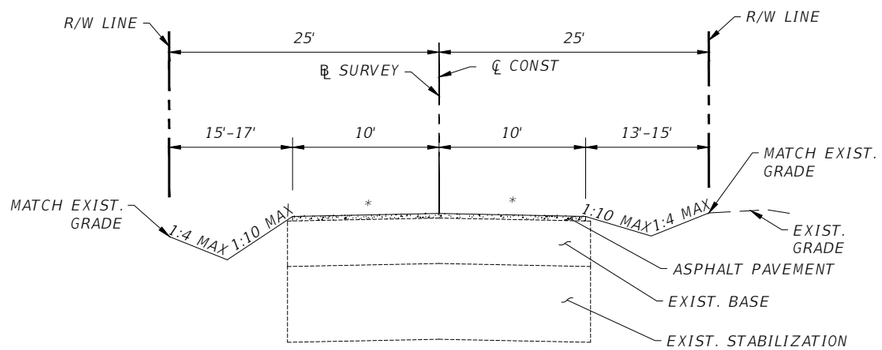

TYPICAL SECTION - FATHER TONY WAY
MILLING & RESURFACING, NTS

STA. 10+65.23 TO STA. 18+25.61
STA. 19+59.61 TO STA. 23+19.64

* MATCH EXISTING
** VARIES - SEE PLAN SHEET

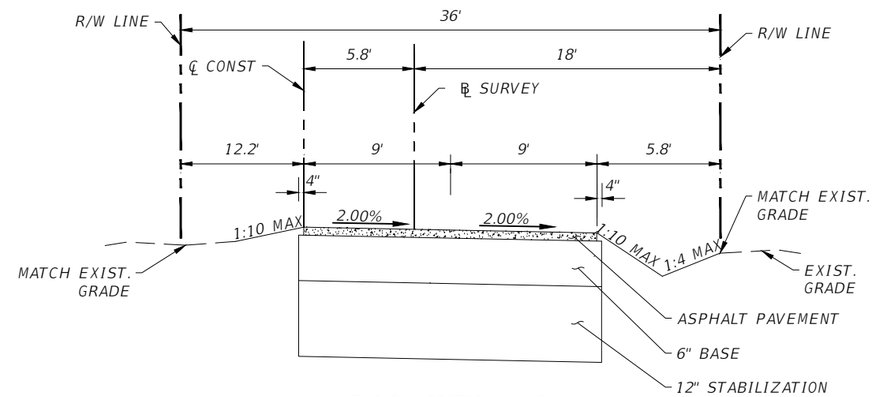

TYPICAL SECTION - AVE J
RECONSTRUCTION, NTS

12" STABILIZED SUBGRADE LBR 40
6" (GROUP 4) LIME ROCK BASE
TYPE SP A.S STRUCTURAL COURSE ASPHALT 1"
TYPE SP (TRAFFIC A) 1"

STA. 11+29.15 TO STA. 12+22.06

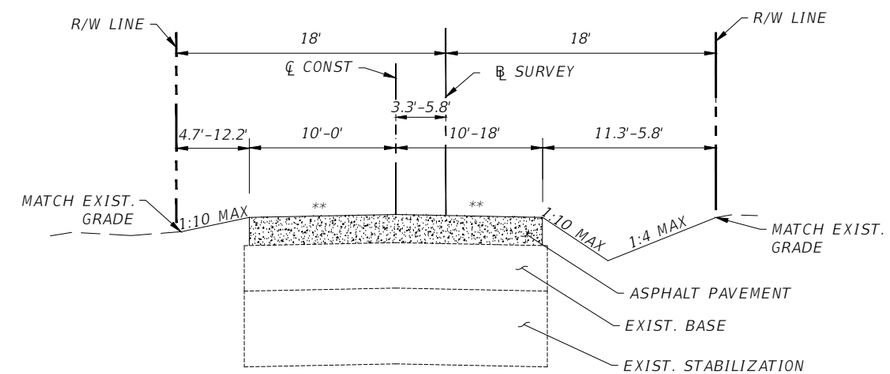

TYPICAL SECTION - AVE J
MILLING, RESURFACING & OVERBUILD, NTS

STA. 10+00.41 TO STA. 11+29.15

NOTES:

1. CONTRACTOR SHALL VERIFY EXISTING UNPAVED SHOULDER COMPOSITION PRIOR TO BIDDING. FINISH SHOULDER MATERIAL TO BE SOD OR NO 57 STONE.
2. ALL COUNTY ROW/SWALES TO BE 2 INCH 57 STONE UNLESS SOD EXISTS. IF SOD EXISTS, REPLACE WITH BAHIA.
3. IF SPECIALTY ROCK DRIVEWAY (FOR EXAMPLE RIVER ROCK OR GRANITE) EXIST TO THE ROAD BED, DO NOT DISTURB.

MILLING & RESURFACING:

4. VARIABLE MILLING (0"-2")
5. RESURFACE WITH 2" ASPHALT PAVEMENT (TYPE SP 9.5)
6. RE-GRADE SHOULDER TO SPECIFIED CROSS SLOPES.

THE OFFICIAL RECORD OF THIS SHEET IS THE ELECTRONIC FILE DIGITALLY SIGNED AND SEALED UNDER RULE 61G15-23.004, F.A.C.

REVISIONS			
DATE	DESCRIPTION	DATE	DESCRIPTION

ANDRES CARDONA, P.E.
P.E. LICENSE NUMBER 63917
WSP USA, 7650 CORPORATE CENTER DRIVE,
SUITE 300, MIAMI, FLORIDA 33126
CERTIFICATE OF AUTHORIZATION 01462

SEA LEVEL RISE ROADWAY AND DRAINAGE PILOT PROJECT (KEY LARGO AND BIG PINE KEY)
MONROE COUNTY - DEPARTMENT OF ENGINEERING

TYPICAL SECTIONS

SHEET NO. G-2B

1" = 200'

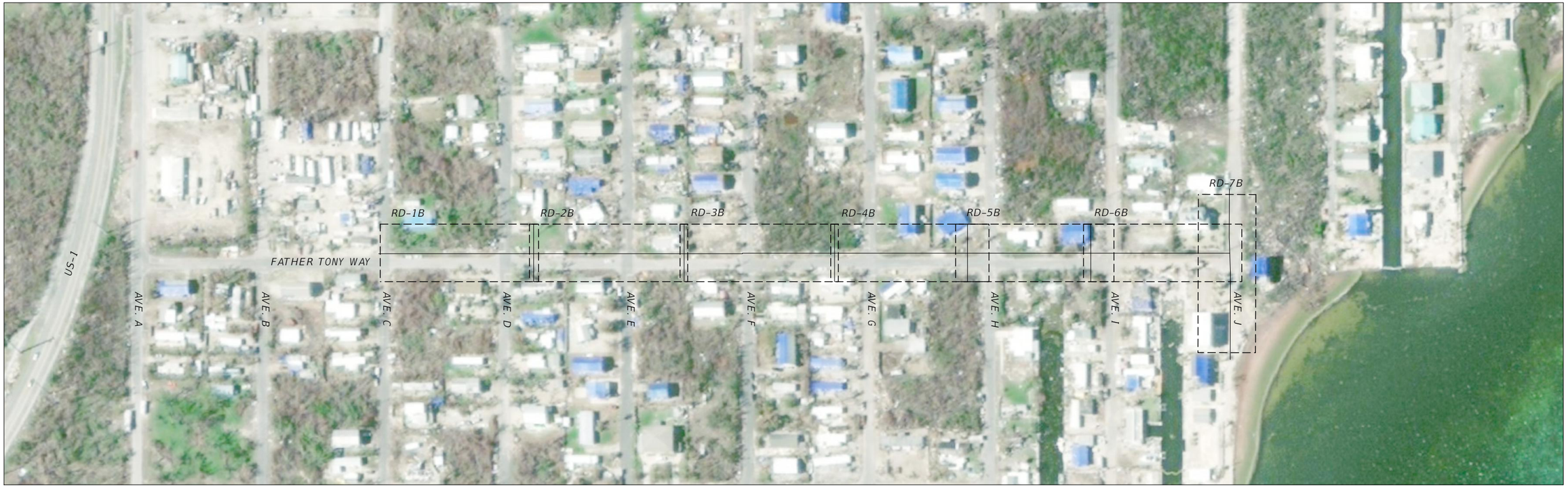

THE OFFICIAL RECORD OF THIS SHEET IS THE ELECTRONIC FILE DIGITALLY SIGNED AND SEALED UNDER RULE 61G15-23.004, F.A.C.

REVISIONS			
DATE	DESCRIPTION	DATE	DESCRIPTION

ANDRES CARDONA, P.E.
P.E. LICENSE NUMBER 63917
WSP USA, 7650 CORPORATE CENTER DRIVE,
SUITE 300, MIAMI, FLORIDA 33126
CERTIFICATE OF AUTHORIZATION 01462

SEA LEVEL RISE ROADWAY AND DRAINAGE PILOT PROJECT (KEY LARGO AND BIG PINE KEY)
MONROE COUNTY - DEPARTMENT OF ENGINEERING

PROJECT LAYOUT

SHEET NO.
G-3B

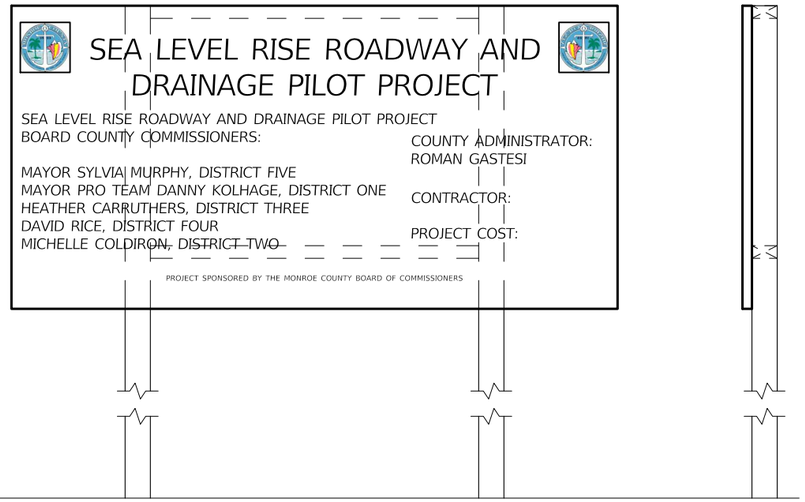

NOTE:

1. BOLT SIGN TO FRAME THRU 4" X 4" MEMBERS WITH WASHERS AND NUT
2. ALL WOOD FRAMING SHALL BE PRESSURE TREATED
3. CONTRACTOR SHALL VERIFY AL ELECTED OFFICIALS AT TIME OF BID AND UPDATE SIGN AS NEEDED.

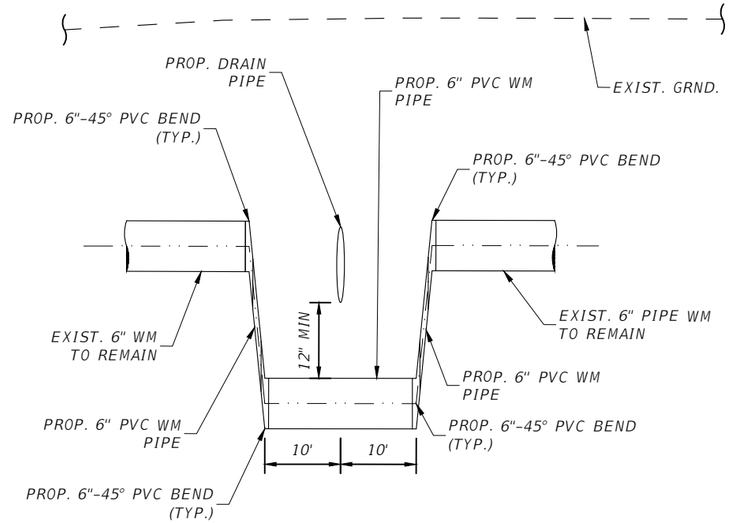

EXISTING 6" WATER MAIN, RELOCATION DETAIL
PROFILE VIEW
N.T.S.

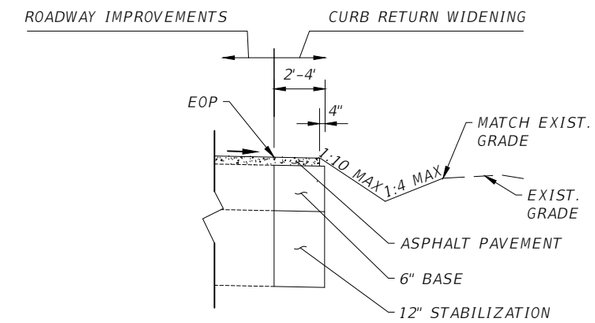

CURB RETURN WIDENING DETAIL
N.T.S.

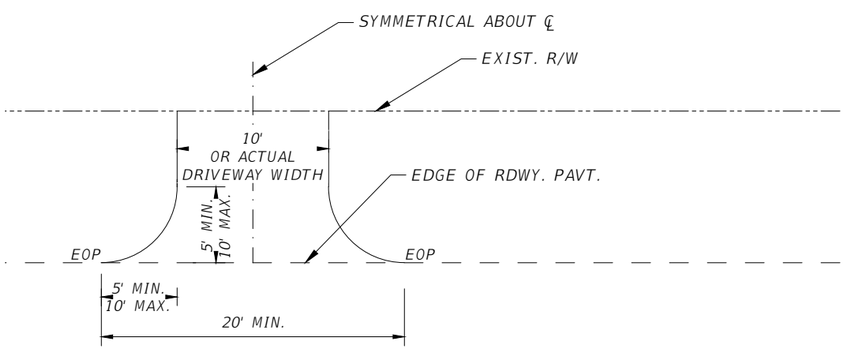

NOTE:

1. MATCH EXISTING DRIVEWAY PAVEMENT COMPOSITION
2. DRIVEWAY RECONSTRUCTION SHALL BE PAID UNDER PAY ITEM FOR TURNOUT CONSTRUCTION. NEW DRIVEWAY SHALL MATCH EXISTING DRIVEWAY PAVEMENT COMPOSITION. WHERE ASPHALT DRIVEWAY IS NEEDED, THE ASPHALT COURSE SHALL BE TRAFFIC LEVEL A (1"). CONCRETE DRIVEWAYS SHALL BE MINIMUM OF 6" THICK.

DRIVEWAY TURNOUT DETAIL
N.T.S.

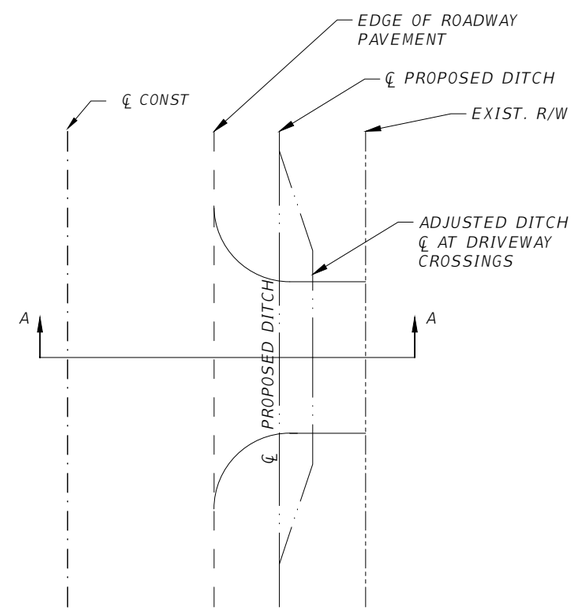

PLAN VIEW
N.T.S.

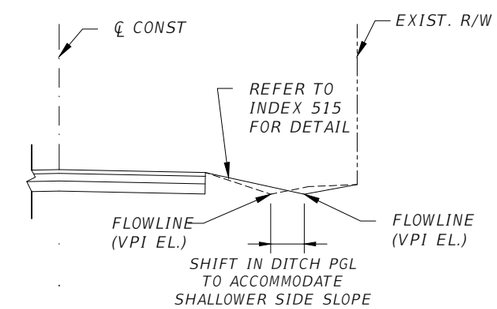

SECTION A-A
N.T.S.

NOTES:

1. SEE TYPICAL SECTIONS FOR PROPOSED DITCH GRADING
2. IN AREAS WHERE A SPECIAL DITCH PROFILE IS NOT PROPOSED, THE CONTRACTOR SHALL ESTABLISH THE DRIVEWAY VPI ELEVATION TO MAINTAIN DRAINAGE PATTERNS.

DRIVEWAY CROSSING DETAIL

THE OFFICIAL RECORD OF THIS SHEET IS THE ELECTRONIC FILE DIGITALLY SIGNED AND SEALED UNDER RULE 61G15-23.004, F.A.C.

REVISIONS			
DATE	DESCRIPTION	DATE	DESCRIPTION

ANDRES CARDONA, P.E.
P.E. LICENSE NUMBER 63917
WSP USA, 7650 CORPORATE CENTER DRIVE,
SUITE 300, MIAMI, FLORIDA 33126
CERTIFICATE OF AUTHORIZATION 01462

SEA LEVEL RISE ROADWAY AND DRAINAGE PILOT PROJECT (KEY LARGO AND BIG PINE KEY)
MONROE COUNTY - DEPARTMENT OF ENGINEERING

SPECIAL DETAILS

SHEET NO. G-4B

GENERAL NOTES

1. ALL CONSTRUCTION ASSOCIATED WITH THIS PROJECT MUST BE IN ACCORDANCE WITH APPLICABLE CODES & AUTHORITIES HAVING JURISDICTION, INCLUDING BUT NOT LIMITED TO THE FLORIDA DEPARTMENT OF TRANSPORTATION (FDOT), MANUAL OF UNIFORM MINIMUM STANDARDS FOR DESIGN, CONSTRUCTION AND MAINTENANCE FOR STREETS AND HIGHWAYS ("FLORIDA GREEN BOOK"), FDOT'S STANDARD SPECIFICATIONS FOR ROAD AND BRIDGE CONSTRUCTION 2019, AND SOUTH FLORIDA WATER MANAGEMENT DISTRICT STANDARDS. ANY DISCREPANCY MUST BE IMMEDIATELY BROUGHT TO THE ATTENTION OF MONROE COUNTY & THE ENGINEER OF RECORD.

2. CONTRACTOR RESPONSIBLE FOR DETERMINING APPROPRIATE STAGING AREA PRIOR TO BIDDING. STAGING IN RESIDENTIAL NEIGHBORHOODS ON PRIVATE PROPERTY MAY REQUIRE A LENGTHY PERMIT PROCESS. USE FDOT R/W FOR STAGING IF AVAILABLE.

3. IT IS THE CONTRACTOR'S RESPONSIBILITY TO FAMILIARIZE HIMSELF/HERSELF WITH PROJECT SITE & TO DETERMINE TOPOGRAPHIC OR UNDERGROUND FEATURES THAT WILL BE IMPACTED DUE TO HIS/HER PROPOSED METHOD OF CONSTRUCTION. CONTRACTOR SHOULD REPORT ANY DISCREPANCIES TO THE COUNTY AND EOR PRIOR TO STARTING CONSTRUCTION. THE CONTRACTOR MUST INCLUDE IN HIS/HER BID PRICE, THE COST OF RELOCATING OR REPLACING IN KIND ANY FEATURES THAT WILL BE IMPACTED DUE TO HIS/HER PROPOSED METHOD OF CONSTRUCTION INCLUDING BUT NOT LIMITED TO EXISTING TREES, UTILITY BOXES, SIGNS, FIRE HYDRANTS, GUARDRAILS, UTILITY POLES, VALVES, ETC. NO ADDITIONAL COMPENSATION WILL BE CONSIDERED BY MONROE COUNTY IN THE EVENT THE CONTRACTOR NEGLECTS TO ACCOUNT FOR THIS WORK IN HIS/HER BID PRICE.

4. THE CONTRACTOR SHALL CLEAR AND GRUB THE PROJECT SITE ONLY TO THE EXTENT NECESSARY TO CONSTRUCT THE PROPOSED IMPROVEMENTS. ANY TREE REMOVAL, CANOPY TRIMMING, OR ROOT PRUNING NECESSARY FOR THE CONSTRUCTION SHALL BE PAID FOR UNDER "CLEARING AND GRUBBING", PAY ITEM 110-1-1.

5. THE CONTRACTOR SHALL SAWCUT, REMOVE AND DISPOSE OF EXISTING PAVEMENT BEYOND PROPOSED EDGE OF PAVED RETURNS (RADII) AND BEYOND PROPOSED EDGE OF DRIVEWAYS AT HIS EXPENSE.

6. CONTRACTOR IS TO VERIFY THE EXACT LOCATION OF ALL EXISTING TREES, STRUCTURES, & UTILITIES WHICH MAY OR MAY NOT BE SHOWN ON THE PLANS. ANY EXISTING STRUCTURE, PAVEMENT, TREE OR OTHER EXISTING UTILITY NOT SPECIFIED FOR REMOVAL WHICH IS DAMAGED, EXPOSED OR IN ANY WAY DISTURBED BY THE CONTRACTOR, SHALL BE REPAIRED, PATCHED OR REPLACED AT NO ADDITIONAL COST TO THE COUNTY.

7. IF GRADE DIFFERENCE AT THE EDGE OF THE PROPOSED PAVEMENT OCCURS, CONTRACTOR SHALL REWORK EXISTING SHOULDER WITH LIMEROCK TO MATCH THE EDGE OF PROPOSED PAVEMENT GRADE.

8. ALL POT HOLES DEEPER THAN 2" SHALL BE CLEARED OF ALL LOSE DEBRIS, TACK COATED, FILLED WITH ASPHALT AND ROLLED PRIOR TO LEVELING OVERLAY ASPHALT.

9. BASE MATERIAL EXPOSED MORE THAN 24 HOURS SHALL BE PRIMED AND COATED FOR PROTECTION.

10. PER USPS STANDARDS, THE CONTRACTOR MUST COORDINATE AND GET APPROVAL FROM RESIDENTS FOR ANY MAILBOXES IN CONFLICT WITH CONSTRUCTION TO BE MOVED BY CONTRACTOR JUST INSIDE THE RESIDENTS PROPERTY TO ALLOW MAIL DELIVERY DURING THE WORK. MAIL BOXES ARE TO BE RE-INSTALLED BY THE CONTRACTOR AT THE END OF THE CONSTRUCTION. BIDDERS SHOULD INCLUDE THIS COST IN THE MOBILIZATION BID ITEM.

11. IF THE CONTRACTOR WISHES TO ENTER INTO SEPARATE AGREEMENTS WITH PROPERTY OWNERS TO PAVE DRIVEWAYS THE PROPERTY OWNER MUST OBTAIN THE PROPER PERMIT FROM MONROE COUNTRY PUBLIC WORKS DEPARTMENT BEFORE ANY SUCH PAVING IS BEGUN. THE CONTRACTOR IS TO SUPPLY A LIST OF ANY SUCH PROPERTY OWNER TO THE PUBLIC WORKS DEPARTMENT PRIOR TO COMPLETION OF THE PROJECT.

12. ANY NECESSARY ENCROACHMENTS OUTSIDE OF R/W SHALL BE IDENTIFIED BY THE CONTRACTOR AND NOTIFIED TO THE HOMEOWNERS WITH A 30 DAY WRITTEN NOTICE.

13. NO LATER THAN CONCLUSION OF EACH DAY OPERATION, CONTRACTOR SHALL THOROUGHLY CLEAN SPILLED SOIL, GRAVEL OR OTHER FOREIGN MATERIAL CAUSED BY THE CONSTRUCTION OPERATIONS FROM THE STREETS AND ROADS.

14. ALL DISTURBED STREETS, ROADS, DETOURS, OR HAUL ROADS IN THE PROJECT AREA SHALL BE TREATED AS REQUIRED, WITH WATER.

15. THE CONTRACTOR SHALL PROVIDE ACCESS TO PROPERTY OWNERS AT ALL TIMES. POTHOLES, TRENCHES, AND OTHER CONSTRUCTION IMPACTS SHALL BE PROPERLY PLATED OR FILLED FOR ACCESS PURPOSES AND WILL BE PAID FOR UNDER MAINTENANCE OF TRAFFIC PAY ITEM NO. 102-1.

16. UNDER NO CIRCUMSTANCES SHALL THE CONTRACTOR LEAVE EXCAVATED TRENCHES OPEN, UNCOVERED OR EXPOSED AT THE END OF THE WORKING DAY, WEEKENDS, HOLIDAYS OR OTHER TIMES WHEN THE CONTRACTOR IS NOT WORKING.

17. CONTRACTOR SHALL KEEP THE SITE FREE FROM DEBRIS, TRASH, & CONSTRUCTION WASTE. CONTRACTOR IS ALLOWED TO STORE MATERIAL STOCKPILED WHERE WORK IS ONGOING FOR MAX. 48 HOURS. ALL ROADS SHALL BE KEPT ACCESSIBLE TO EMERGENCY VEHICLES.

18. CONTRACTOR SHALL USE A STREET SWEEPER (USING WATER) OR OTHER EQUIPMENT CAPABLE OF CONTROLLING AND REMOVING DUST. A WATER TRUCK SHALL BE MAINTAINED ON SITE AT ALL TIMES. APPROVAL OF THE USE OF SUCH EQUIPMENT IS CONTINGENT UPON ITS DEMONSTRATED ABILITY TO DO THE WORK. CLEANING AND SWEEPING IS TO BE INCLUDED IN MAINTENANCE OF TRAFFIC.

19. CONTRACTOR IS REQUIRED TO OBTAIN ALL NECESSARY PERMITS AND/OR APPROVALS PRIOR TO THE START OF CONSTRUCTION INCLUDING BUT NOT LIMITED TO AN NPDES NOI PERMIT & ANY OTHER ASSOCIATED PERMIT.

20. ALL LANDSCAPED/OPEN AREAS, PAVEMENTS & OTHER AREAS IMPACTED BY CONSTRUCTION SHALL BE RESTORED TO THEIR ORIGINAL CONDITION OR BETTER AT NO ADDITIONAL COST TO THE COUNTY.

21. DRIVEWAY RECONSTRUCTION SHALL BE PAID UNDER PAY ITEM FOR TURNOUT CONSTRUCTION. NEW DRIVEWAY SHALL MATCH EXISTING DRIVEWAY PAVEMENT COMPOSITION. WHERE ASPHALT DRIVEWAY IS NEEDED, THE ASPHALT COURSE SHALL BE TRAFFIC LEVEL A. CONCRETE DRIVEWAY SHALL BE A MINIMUM OF 6" THICK.

22. EXISTING SIGNS IN CONFLICT WITH A PROPOSED SWALES AREA SHALL BE PROTECTED. EXISTING SIGNS WITHIN CURVE IMPROVEMENTS SHALL BE RELOCATED ACCORDING TO SIGNING PAVING MARKING DETAILS.

23. IN THE EVENT CONTAMINATED MATERIALS ARE ENCOUNTERED DURING CONSTRUCTION, THE CONTRACTOR SHALL IMMEDIATELY ADVISE MONROE COUNTY AND ENGINEER OF RECORD.

24. ANY MATERIAL REMOVED FROM THIS PROJECT SHALL BE DISPOSED OF PROPERLY BY THE CONTRACTOR AT NO ADDITIONAL EXPENSE TO THE COUNTY.

25. GEOTECHNICAL EXPLORATIONS WERE CARRIED OUT ON THE PROJECT SITE BY TERRACON CONSULTANTS, INC. AND A REPORT DATED JANUARY 31TH 2019 WAS GENERATED. THIS REPORT IS INCLUDED AS PART OF THE PROJECT'S SPECIFICATIONS. THE CONTRACTOR IS RESPONSIBLE FOR REVIEWING THIS REPORT & ITS RECOMMENDATIONS FOR DEALING WITH POTENTIAL SITE ISSUES. THE CONTRACTOR MUST INCLUDE AS PART OF HIS/HER BID PRICE THE RESOURCES NECESSARY TO INCORPORATE THE RECOMMENDATIONS OF THE REFERENCED REPORT.

26. CONTRACTOR SHALL PREPARE & SUBMIT SHOP DRAWINGS FOR ALL ITEMS LISTED IN PROJECT SPECIFICATIONS.

27. WHERE NEW PAVEMENT MEETS EXISTING, CONNECTION SHALL BE MADE IN A NEAT STRAIGHT LINE & FLUSH WITH EXISTING PAVEMENT.

28. ALL STATIONS AND OFFSETS ARE FROM THE CENTERLINE OF CONSTRUCTION.

29. RADII, DIMENSIONS AND ELEVATIONS ARE TO EDGE OF PAVEMENT UNLESS OTHERWISE NOTED.

30. GRADES SHOWN ARE FINISHED GRADES.

31. R/W BREAK LINES STATIONS AND OFFSETS ARE MEASURED FROM CENTERLINE OF CONSTRUCTION.

32. CONTRACTOR IS FULLY RESPONSIBLE TO RESTORE EXISTING TRAFFIC RELATED INFRASTRUCTURE DAMAGED DURING CONSTRUCTION. THE CONTRACTOR MUST COORDINATE WITH MONROE COUNTY ENGINEERING DIVISION PRIOR TO CONSTRUCTION.

33. AN APPROVED SET OF CONSTRUCTION PLANS AND CONTRACT DOCUMENTS SHALL BE MAINTAINED BY THE CONTRACTOR ON SITE AT ALL TIMES DURING OPERATIONS.

34. CONTRACTOR SHALL PROVIDE TO THE COUNTY'S REPRESENTATIVE, PRIOR TO CONSTRUCTION OF THE PROJECT, A CERTIFICATE THE FLORIDA DEPARTMENT OF AGRICULTURE AND SERVICES DIVISION OF PLANT INDUSTRY, STATING SOD, HAY, STRAW AND MULCH MATERIALS ARE FREE NOXIOUS WEEDS INCLUDING TROPICAL SODA APPLE.

35. CONTRACTOR IS FULLY RESPONSIBLE FOR RESTORING ALL PAVEMENT MARKINGS WITH NEW STRIPING AS SHOWN ON PLANS. FINAL PAVEMENT STRIPING MUST BE THERMOPLASTIC IN ACCORDANCE WITH FDOT STANDARDS. ALL CONSTRUCTION WORK EFFORT ASSOCIATED WITH THIS ITEM MUST BE INCLUDED IN THE BID PRICE.

36. ALL ELEVATIONS ON THE PLAN & PROFILE SHEETS REFER TO THE NORTH AMERICAN VERTICAL DATUM 1988 (NAVD-1988).

37. ALL PUBLIC CORNERS AND PRIMARY NETWORK CONTROL SURVEY MONUMENTS ARE TO BE PROTECTED BY THE CONTRACTOR, CORNERS AND MONUMENTS WITHIN THE WORK ZONE AND IN DANGER OF BEING DAMAGED, DESTROYED OR COVERED SHALL BE PROPERLY REFERENCED BY A REGISTERED LAND SURVEYOR IN ACCORDANCE WITH MINIMUM TECHNICAL STANDARDS OF THE BOARD OF PROFESSIONAL LAND SURVEYORS PRIOR TO THE BEGINNING OF THE WORK. UPON PROJECT COMPLETION CONTRACTOR SHALL RESTORE ALL SUCH CORNERS AND MONUMENTS AND SHALL FURNISH TO DISTRICT LOCATION SURVEYOR A SIGNED AND SEALED COPY OF THE LAND SURVEYOR.

38. THE B/L SURVEY AS SHOWN ON THE PLANS IS TO BE USED FOR REFERENCE ONLY. THE B/L SURVEY WAS PROVIDED BY LONGITUDE SURVEYORS, LLC. - EDUARDO M. SUAREZ, PSM - CERTIFICATE NO. 6313.

39. CONTRACTOR MUST COMPLY WITH ALL HORIZONTAL & VERTICAL SEPARATION REQUIREMENTS AS STATED IN THE FLORIDA ADMINISTRATIVE CODE (F.A.C.) RULE 62-555.314.

40. CONTRACTOR WILL BE REQUIRED TO MAKE A PRE-CONSTRUCTION VIDEO FOR HIS/HER RECORDS AND SUBMIT A COPY OF THE VIDEO TO THE COUNTY AND EOR FOR THEIR RECORDS.

41. GRASSED AREAS: UNLESS OTHERWISE SPECIFIED ON CONSTRUCTION DRAWINGS, DETAILS AND SPECIFICATIONS, PROVIDE SOLID SODDING OF BAHIA WHERE PROPOSED SOD IS CALLED OUT ON THE CONSTRUCTION DOCUMENTS.

42. CONTRACTOR TO DOCUMENT IN VIDEO OR PICTURES THE CONDITIONS OF SITE AND ANY SPECIFIC AREA TO BE MODIFIED DUE TO CONSTRUCTION ACTIVITIES. IT IS THE CONTRACTOR'S RESPONSIBILITY TO RESTORE MODIFIED AREAS AS FOUND PRIOR TO CONSTRUCTION, UNLESS OTHERWISE INSTRUCTED BY THE COUNTY.

THE OFFICIAL RECORD OF THIS SHEET IS THE ELECTRONIC FILE DIGITALLY SIGNED AND SEALED UNDER RULE 61G15-23.004, F.A.C.

UTILITIES NOTES

1. THE CONTRACTOR SHALL CONTACT SUNSHINE STATE ONE CALL 811 AT LEAST 48 HOURS PRIOR TO PERFORMING ANY EXCAVATION/DIGGING TO VERIFY THE EXACT LOCATION OF EXISTING UTILITIES.

2. THE CONTRACTOR IS RESPONSIBLE FOR CONTACTING ALL UTILITY OWNERS WITHIN THE PROJECT'S LIMITS (INCLUDING THOSE LISTED BELOW), COORDINATING AND OBTAINING PROPOSED RELOCATION/INSTALLATION SCHEDULES FOR ALL IMPACTED UTILITIES PRIOR TO THE BEGINNING OF CONSTRUCTION. THE CONTRACTOR IS RESPONSIBLE FOR IDENTIFYING AND VERIFYING THE EXACT LOCATION OF ALL EXISTING UTILITIES AND PROPOSED LOCATIONS.

3. THE LOCATION & SIZE OF ALL EXISTING UTILITIES SHOWN ON THESE DRAWINGS ARE APPROXIMATE. ADDITIONAL UTILITIES MAY EXIST WHICH ARE NOT SHOWN ON THESE DRAWINGS. CONTRACTOR SHALL ADVISE IF CONFLICTS EXIST AND PROPOSE A SOLUTION FOR EOR TO APPROVE. THIS WORK BY THE CONTRACTOR SHALL BE CONSIDERED INCIDENTAL TO THE CONTRACT & NO ADDITIONAL COMPENSATION SHALL BE ALLOWED.

4. IT IS THE CONTRACTORS SOLE RESPONSIBILITY TO TAKE ADEQUATE MEASURES TO ENSURE SAFETY WHEN WORKING WITHIN THE VICINITY OF OVERHEAD ELECTRICAL, TELEPHONE & OTHER UTILITIES. PROPER COORDINATION WITH JURISDICTIONAL AUTHORITIES MUST BE UNDERTAKEN AS APPLICABLE.

5. CONTRACTOR SHALL COORDINATE WITH UTILITY COMPANIES FOR TEMPORARY RELOCATION/FIELD ADJUSTMENT TO FACILITATE CONNECTION OF PROPOSED DRAINAGE SYSTEM.

6. CONTRACTOR MUST ENSURE THAT PRECISE RECORDS ARE TAKEN PRIOR TO BACKFILLING OVER UTILITIES. AS-BUILTS MUST CONFORM TO APPLICABLE STANDARDS & REQUIREMENTS STIPULATED BY THE PROJECT SPECIFICATIONS.

7. ALL EXISTING UTILITIES ARE TO REMAIN UNLESS OTHERWISE NOTED IN THE PLANS.

8. THE CONTRACTOR IS RESPONSIBLE FOR ADJUSTING AND RETROFITTING ALL UTILITY INFRASTRUCTURE WITHIN THE PROPOSED ROAD IMPROVEMENTS SUCH THAT THEY ARE FLUSH WITH THE PROPOSED SURFACE AND ARE TRAFFIC RATED WHETHER THEY ARE SHOWN IN THE PLANS OR NOT. THESE TYPES OF INFRASTRUCTURE INCLUDE BUT ARE NOT LIMITED TO VALVE COVERS, MANHOLES, ETC. THESE ADJUSTMENTS AND RETROFITS MUST BE COORDINATED WITH THE OWNERS OF THE FACILITIES AND THE COSTS MUST BE INCLUDED IN THE BID PRICE. NO ADDITIONAL COMPENSATION WILL BE CONSIDERED FOR THE CONTRACTOR'S FAILURE TO COMPLY WITH THE ABOVE.

9. THE CONTRACTOR SHALL CUT AND PLUG EXISTING ABANDONED UTILITY IN CONFLICT WITH THE INSTALLATION OF THE PROPOSED DRAINAGE STRUCTURE. CONTRACTOR SHALL COORDINATE WITH THE UTILITY OWNER PRIOR TO CUTTING THE UTILITY AND INSTALLING THE STRUCTURES, IF THE UTILITY IS A MAIN LARGER THAN 4-INCH, THE UTILITY MAY BE FILLED WITH GROUT.

10. UTILITY OWNERS:

FLORIDA KEYS AQUEDUCT AUTHORITY	305-295-2154
FLORIDA KEYS ELECTRIC COOPERATIVE	305-852-2431
KEY LARGO WASTWATER TREATMENT DISTRICT	305-451-4019

PRE-TRENCHING NOTES

1. UTILITIES SHOWN ON THESE PLANS SHEETS ARE APPROXIMATE & ADDITIONAL UTILITIES MAY EXIST IN THE FIELD THAT ARE NOT SHOWN ON THE PLANS. THE CONTRACTOR MUST INCLUDE AS PART OF HIS/HER BID, AN ITEM FOR PRE-TRENCHING TO ENSURE THAT NO PORTION OF THE PROPOSED WORK CONFLICTS WITH ANY UTILITIES, PRIOR TO CONSTRUCTION. IF POTENTIAL CONFLICTS ARE FOUND, THEN THE CONTRACTOR MUST NOTIFY THE OWNER, ENGINEER & UTILITY OWNER AT LEAST SEVEN (7) DAYS ADVANCED NOTICE PRIOR TO CONSTRUCTION. THIS NOTIFICATION SHALL INCLUDE SURVEY INFORMATION ABOUT THE CONFLICTING UTILITY'S HORIZONTAL & VERTICAL ALIGNMENT. FAILURE ON THE CONTRACTOR'S PART TO PRE-TRENCH PRIOR TO CONSTRUCTION IS AT HIS/HER OWN RISK & BY SO DOING RELIEVES THE OWNER & THE ENGINEER OF ANY & ALL LIABILITIES & COSTS ASSOCIATED WITH RESOLVING UTILITY CONFLICTS. IN ADDITION, NO ADDITIONAL COMPENSATION WILL BE GRANTED FOR ANY COSTS INCURRED AS A RESULT OF FAILURE ON THE CONTRACTOR'S PART TO PRE-TRENCH.

2. EXTREME CAUTION MUST BE USED DURING ANY EXCAVATION. ALL EXCAVATIONS MUST BE SHORED, SHEETED, BRACED OR OTHERWISE SUPPORTED AS INDICATED IN THE GEOTECHNICAL REPORT'S RECOMMENDATIONS.

3. CONTRACTOR MUST UTILIZE SUBSURFACE UTILITY ENGINEERING METHODS & CORING TO DISCLOSE THE PRESENCE OF ROCK, UTILITIES & OTHER SUBSURFACE ELEMENTS NOT INDICATED ON TOPOGRAPHY SURVEY.

4. CONTRACTOR MUST ENGAGE IN CONSULTATIONS WITH IDENTIFIED UTILITY OWNERS.

5. PRE-TRENCHING DIRECTIONS TO CONTRACTOR:

   A. CONTRACTOR MUST UTILIZE A SUPPORT SYSTEM STURDY ENOUGH TO WITHSTAND THE PRESSURE OF THE SOIL.

   B. CONTRACTOR MUST UTILIZE A SUPPORT SYSTEM STURDY ENOUGH TO WITHSTAND THE STRESS WHICH MAY BE EXERTED BY WATER, VIBRATION, OR HEAVY LOADS.

   C. CONTRACTOR MUST PROPERLY SUPPORT ANY UNDERGROUND INSTALLATIONS THAT ARE UNCOVERED.

   D. CONFORM TO FLORIDA'S TRENCH SAFETY ACT & OSHA REQUIREMENTS.

6. BEFORE TRENCHING OR EXCAVATION, CONTRACTOR MUST CHECK THE FOLLOWING:

   A. SOIL CONDITIONS OR OTHER MATERIAL TO BE REMOVED.

   B. PROXIMITY TO UTILITIES, BUILDINGS & SOURCES OF VIBRATIONS.

   C. OWNERS OF UTILITIES, SERVICE, OR TRANSMISSION PIPING, ETC. & ARRANGE FOR SHUTDOWN OR RELOCATION OF FACILITIES, IF NECESSARY.

   D. FOR PREVIOUSLY DISTURBED GROUND.

   E. FOR TREES, BOULDERS, OR OTHER HAZARDS.

   F. ADEQUACY & AVAILABILITY OF ALL EQUIPMENT, INCLUDING PERSONAL PROTECTIVE GEAR, SHORING MATERIALS, SIGNS, BARRICADES & MACHINERY.

7. DURING TRENCHING OR EXCAVATION, CONTRACTOR MUST REGULARLY CHECK FOR THE FOLLOWING:

   A. CHANGING GROUND CONDITIONS PARTICULARLY AFTER RAINFALL.

   B. POSSIBLE OXYGEN DEFICIENCY OR GASEOUS CONDITIONS.

   C. ADEQUACY OF SHORING AND/OR SLOPING AS WORK PROGRESSES.

   D. MAINTENANCE OF ENTRANCE & EXIT FACILITIES.

   E. ALL SHEETING, BRACING, SHORING & UNDERPINNING.

   F. CHANGES IN VEHICULAR & MACHINERY OPERATIONAL PATTERNS

8. AFTER TRENCHING OR EXCAVATION, THE CONTRACTOR MUST CHECK FOR:

   A. DEPTH OF TRENCHING OR EXCAVATION, ITS SLOPING & SHORING.

   B. SLOPING OF BANKS, SIDES & WALLS 1M RELATION TO DEPTH OF CUT, WATER CONTENT OF SOIL, VIBRATIONS.

   C. ENTRANCE & EXIT FACILITIES.

   D. LOCATION OF HEAVY EQUIPMENT - POWER SHOVELS, DERRICK, TRUCKS.

   E. EXCAVATION MATERIAL IS TWO FEET OR MORE FROM EDGE OF OPENING.

   F. PORTABLE TRENCH BOXES OR TRENCH SHIELDS ARE ADEQUATE, IF USED.

   G. CROSS BRACES OR TRENCH JACKS ARE CORRECTLY POSITIONED TO PREVENT SLIDING, FALLING OR KICKOUTS.

9. PRE-TRENCHING REQUIREMENTS CHECKLIST:

   A. PRIOR TO EXCAVATION. THE CONTRACTOR MUST UNDERTAKE EFFORTS TO DETERMINE UNDERGROUND INSTALLATIONS SUCH AS SEWER, TELEPHONE, WATER, GAS, ELECTRIC LINES, ETC. ARE PRESENT & WHERE THEY ARE ACTUALLY LOCATED.

   B. THE WALLS & FACES OF ALL EXCAVATIONS IN WHICH EMPLOYEES ARE EXPOSED TO DANGER FROM MOVING GROUND SHALL BE GUARDED BY A SHORING SYSTEM, SLOPING OF THE GROUND OR SOME OTHER EQUIVALENT MEANS.

   C. THE DETERMINATION OF THE ANGLE OF REPOSE & DESIGN OF THE SUPPORTING SYSTEM SHALL BE BASED ON CAREFUL EVALUATION OF PERTINENT FACTORS SUCH AS: DEPTH OF CUT, POSSIBLE VARIATION IN THE WATER CONTENT OF THE MATERIALS FROM EXPOSURE TO AIR, SUN AND/OR WATER.

   D. ALL SLOPES SHALL BE EXCAVATED TO AT LEAST THE ANGLE OF REPOSE EXCEPT IN AREAS WHERE SOLID ROCK ALLOWS FOR LINE DRILLING OR PRESPLITTING.

   E. IN EXCAVATIONS WHICH EMPLOYEES MAY BE REQUIRED TO ENTER, EXCAVATED OR OTHER MATERIALS SHALL BE EFFECTIVELY STORED & RETAINED AT LEAST 2 FT OR MORE FROM THE EDGE OF THE EXCAVATION.

THE OFFICIAL RECORD OF THIS SHEET IS THE ELECTRONIC FILE DIGITALLY SIGNED AND SEALED UNDER RULE 61G15-23.004, F.A.C.

PAVING NOTES

1. RESURFACING OF MILLED AREAS SHALL BE COMPLETED WITHIN 3 CALENDAR DAYS OF MILLING OPERATION TO MINIMIZE POTHOLE DEVELOPMENT AND INCONVENIENCES TO MOTORING PUBLIC.

2. UNLESS OTHERWISE INDICATED, ONLY ROADWAY LANES AFFECTED BY ACTUAL CONSTRUCTION OR DAMAGED BY CONSTRUCTION EQUIPMENT SHALL BE MILLED AND RESURFACED. LANES DAMAGED BY CONSTRUCTION EQUIPMENT OR BY THE IMPROPER OPERATION OF CONSTRUCTION EQUIPMENT SHALL BE RESTORED AT THE CONTRACTOR'S EXPENSE. ALL RESTORATION SHALL COMPLY WITH THE STANDARDS AND REQUIREMENTS OF FDOT AND MONROE COUNTY.

3. CONTRACTOR SHALL ADJUST ALL MANHOLE COVERS, UTILITY ACCESS BOXES, CATCH BASINS, VALVE BOXES TO BE FLUSH WITH FINISH GRADES.

4. CONTRACTOR SHALL POST SIGNS NOTIFYING RESIDENTS OF PAVING SCHEDULE DAYS AT LEAST 48 HOURS IN ADVANCE.

GRADING NOTES

1. OSHA TRENCH SAFETY COMPLIANCE – THE CONTRACTOR SHALL UTILIZE TRENCH BOXES OR OTHER APPROVED MEANS TO COMPLY WITH THE FLORIDA TRENCH SAFETY ACT (FLORIDA STATUTE SECTIONS 553.60–553.63), AND THE OCCUPATIONAL SAFETY AND HEALTH ADMINISTRATION (OSHA) EXCAVATION SAFETY STANDARDS, 29 C.F.R.S. 1926.650 SUBPART P.

2. EXCESS EXCAVATED MATERIAL – EXCESS EXCAVATED MATERIAL SHALL BE DISPOSED OF IN A MANNER ACCEPTABLE AND AUTHORIZED BY JURISDICTIONAL AUTHORITIES. CONTRACTOR MUST COMPLY WITH APPLICABLE SECTIONS OF TECHNICAL SPECIFICATIONS.

3. CONSTRUCTION DEBRIS SHALL NOT BE BURIED OR LEFT ON SITE DURING OR AFTER CONSTRUCTION. ADVERSE IMPACTS TO PROPOSED WORK OR ALREADY CONSTRUCTED WORK BY DEBRIS MUST BE AVOIDED.

4. LANDSCAPED AREAS & OTHER PERVIOUS AREAS THAT DO NOT HAVE A DEFINED DRAINAGE COLLECTION SYSTEM SHALL BE GRADED TO ENSURE POSITIVE DRAINAGE.

MOT NOTES

1. TRAFFIC CONTROLS SHALL BE IN ACCORDANCE WITH THE CURRENT EDITION OF THE FDOT DESIGN STANDARDS (102-600 SERIES), THE 2019 FDOT STANDARD SPECIFICATIONS FOR ROAD AND BRIDGE CONSTRUCTION AND THE MANUAL ON UNIFORM TRAFFIC CONTROL DEVICES (2009 EDITION) AS MINIMUM CRITERIA.

2. THE POSTED SPEED LIMITS SHALL REMAIN AT ALL TIMES DURING CONSTRUCTION.

3. MAINTAIN ACCESS TO ALL PROPERTIES FOR EMERGENCY VEHICLES AND SOLID WASTE SERVICES.

4. MAINTAIN CLEAR DRIVEWAY ACCESS TO ALL PROPERTIES.

5. PROVIDE AND MAINTAIN ACCESS TO THE LOCAL TRAFFIC AND BUSINESSES AT ALL TIMES DURING CONSTRUCTION PER FDOT STANDARD INDEX 600.

6. THE MAINTENANCE OF TRAFFIC (MOT) PLANS FOR THE PROJECT IS THE SOLE RESPONSIBILITY OF THE CONTRACTOR. THE CONTRACTOR MUST PRODUCE HIS/HER OWN MOT PLANS & MUST HAVE SAID PLANS APPROVED BY OWNERS REPRESENTATIVE PRIOR TO CONSTRUCTION. RESIDENTS ACCESS TO THEIR HOMES AND ACCESS FOR EMERGENCY VEHICLES SHOULD BE PROVIDED AT ALL TIMES. THE COST ASSOCIATED WITH THIS EFFORT MUST BE REFLECTED IN THE BID. NO ADDITIONAL COMPENSATION WILL BE GRANTED BY THE COUNTY FOR MOT COSTS ASSOCIATED WITH THIS PROJECT AFTER PROJECT AWARD. MOT PLANS THAT IMPACT US-1 SHALL BE APPROVED BY FDOT.

7. MOT PLANS SHALL INCLUDE BUT NOT LIMITED TO MESSAGE BOARDS TO INFORM DRIVERS OF CONSTRUCTION ON ROADWAY & MAINTAINING CROSSING ACCESS, ETC. CONTRACTOR IS ALSO RESPONSIBLE FOR NOTIFYING ALL SCHOOLS & EMERGENCY SERVICES WITHIN THE VICINITY OF THE PROJECT LIMITS ABOUT THE CONSTRUCTION SCHEDULE.

8. ALL WORK SHALL BE PERFORMED DURING DAY TIME ONLY 7A.M. TO 7P.M. CONTRACTOR TO COORDINATE WITH COUNTY'S REPRESENTATIVE PRIOR TO BEGIN CONSTRUCTION.

THE OFFICIAL RECORD OF THIS SHEET IS THE ELECTRONIC FILE DIGITALLY SIGNED AND SEALED UNDER RULE 61G15-23.004, F.A.C.

REVISIONS

DATE	DESCRIPTION	DATE	DESCRIPTION

ANDRES CARDONA, P.E.
P.E. LICENSE NUMBER 63917
WSP USA, 7650 CORPORATE CENTER DRIVE,
SUITE 300, MIAMI, FLORIDA 33126
CERTIFICATE OF AUTHORIZATION 01462

SEA LEVEL RISE ROADWAY AND DRAINAGE PILOT PROJECT (KEY LARGO AND BIG PINE KEY)
MONROE COUNTY - DEPARTMENT OF ENGINEERING

PROJECT NOTES

SHEET NO. G-7B

ENVIRONMENTAL NOTES

1. GENERAL ENVIRONMENTAL NOTES:

THE CONTRACTOR SHALL REVIEW ENVIRONMENTAL REQUIREMENTS OF ANY PROPOSED STAGING AREAS WITH THE MONROE COUNTY PROJECT CEI REPRESENTATIVE AT LEAST SEVENTY TWO (72) HOURS PRIOR TO USE. STAGING AREAS ON PARCELS NEED TO BE APPROVED AND PERMITTED BY THE MONROE COUNTY BUILDING DEPARTMENT AT (305)-289-2501.

ANY MATERIAL TO BE STOCKPILED FOR PERIODS GREATER THAN 24 HOURS SHALL BE PROTECTED WITH APPROPRIATE EROSION CONTROL DEVICES, COST TO BE INCLUDED IN THE RELATED BID ITEM.

2. WETLANDS & OTHER SURFACE WATERS:

THE CONTRACTOR IS ADVISED THAT WETLAND AND OTHER SURFACE WATERS (NATURAL WATER BODIES AND SIMILAR OPEN OR PARTIALLY OPEN WATER AREAS, WATERS OF THE UNTIED STATES) ARE ADJACENT TO THE PROJECT. THE CONTRACTOR SHALL NOT IMPACT THESE WETLANDS OR PROTECTED OTHER SURFACE WATERS. WETLANDS CANNOT BE USED AS STAGING OR STOCKPILE AREAS.

THE CONTRACTOR SHALL NOT IMPACT WETLANDS ADJACENT TO THE PROJECT CORRIDOR. PRIOR TO OR AT THE TIME OF THE PRE-CONSTRUCTION MEETING, THE CONTRACTOR SHALL MEET WITH THE PROJECT ENGINEER TO FIELD-VERIFY THE EXTENT AND BOUNDARY OF WETLAND VEGETATION ON SITE, SILT FENCES WILL BE INSTALLED AT CONSTRUCTION AREAS ADJACENT TO WETLANDS, AND MAINTAINED IN GOOD CONDITION AT ALL TIMES DURING CONSTRUCTION ACTIVITIES.

ANY MATERIAL INADVERTENTLY PLACED IN WETLANDS OR OTHER SURFACE WATERS SHALL BE REMOVED BY HAND. ANY ACCIDENTAL DAMAGE CAUSED TO PROTECTED/PRESERVED WETLANDS AS A RESULT OF THE CONTRACTOR'S ACTIVITIES SHALL IMMEDIATELY BE REPORTED TO THE PROJECT MANAGER AND PROJECT ENGINEER. THE CONTRACTOR SHALL BE RESPONSIBLE FOR APPROPRIATE REMEDIATION OF ANY SUCH DAMAGE IN ACCORDANCE WITH DIRECTIVES AND SPECIFICATIONS PROVIDED BY THE PROJECT MANAGER OR THE MANAGER'S DESIGNEE.

SILT FENCES SHALL NOT BE PLACED WITHIN THE LIMITS OF ANY WETLANDS OR OTHER SURFACE WATERS. IF HAY BALES ARE USED FOR EROSION CONTROL, PLACEMENT OF THESE BALES WITHIN WETLANDS SHOULD BE AVOIDED EXCEPT IN SITUATIONS WHERE LOCATION OF STAKED BALES IN WETLANDS IS ABSOLUTELY NECESSARY TO ADEQUATELY CONTROL EROSION AND TURBIDITY.

THIS PROJECT IS ADJACENT TO THE WATERS OF THE ATLANTIC OCEAN AND FLORIDA BAY, WHICH ARE DESIGNATED OUTSTANDING FLORIDA WATERS. NO DEGRADATION OF WATER QUALITY, INCREASED TURBIDITY IN THE WATER, AND/OR DISCHARGE OF ANY FOREIGN MATERIAL INTO THE WATER SHALL BE PERMITTED.

3. PROTECTION OF LISTED SPECIES:

VARIOUS ANIMALS DESIGNATED BY STATE AND FEDERAL AGENCIES AS ENDANGERED, THREATENED, OR SPECIES OF SPECIAL CONCERN (E.G., "LISTED SPECIES") MAY BE PRESENT IN THE GENERAL PROJECT AREA. SUCH SPECIES INCLUDE, BUT ARE NOT LIMITED TO, KEY LARGO WOODRAT (Neotoma floridana smalli), KEY LARGO COTTON MOUSE (Peromyscus gossypinus allapaticola), STOCK ISLAND TREE SNAIL (Orthalicus reses reses), FLORIDA TREE SNAIL (liguus fasciatus), SCHAUS' SWALLOWTAIL BUTTERFLY (Heraclides aristodemus ponceanus), WHITE-CROWNED PIGEON (Columba leucocephala), SNOWY EGRET (Egretta thula), LITTLE BLUE HERON (Egretta carulia), TRICOLORED HERON (Egretta tricolor), WHITE IBIS (Eudocimus albus), BROWN PELICAN (Pelicanus occidentallis), ROSEATE SPOONBILL (Platalea haliaetus), AMERICAN CROCODILE (Crocodylus acutus), AMERICAN ALLIGATOR (Alligator mississippiensis), EASTERN INDIGO SNAKE (Drymarchon corals couperi), AND RIM ROCK CROWNED SNAKE (Tantilla oolitica). THE CONTRACTOR SHOULD BE AWARE THAT STATE AND FEDERAL REGULATIONS PROHIBIT HARMING OR HARASSING ANY LISTED SPECIES.

THE CONTRACTOR SHALL BE RESPONSIBLE FOR ENSURING THAT ALL PROJECT PERSONNEL, INCLUDING SUB-CONTRACTORS, ARE AWARE OF AND ABIDE BY ALL REQUIREMENTS PERTAINING TO LISTED ANIMAL AND PLANT SPECIES. THIS RESPONSIBILITY EXTENDS TO ENSURING PROJECT PERSONNEL ARE AWARE OF AND ABIDE BY THE REQUIREMENT FOR INSPECTING VEGETATION CLEARING/TRIMMING AREAS FOR THE PRESENCE OF BIRD NESTS AND THE PROHIBITION AGAINST DAMAGING SUCH NESTS WITHOUT PRIOR APPROVAL (SEE GENERAL VEGETATION CLEARING AND TRIMMING NOTES).

IT IS OFTEN DIFFICULT FOR UNTRAINED PERSONNEL TO CORRECTLY IDENTIFY LISTED SPECIES. BECAUSE OF THIS, THE CONTRACTOR SHALL NOT HARM OR HARASS ANY ANIMAL SPECIES ENCOUNTERED DURING PROJECT CONSTRUCTION. SHOULD THESE SPECIES BE ENDANGERED BY CONSTRUCTION ACTIVITIES, THE CONTRACTOR SHALL CONTACT THE MONROE COUNTY PROJECT MANAGER WITHIN 24 HOURS OF EACH ENCOUNTER.

THE FOLLOWING PRECAUTIONS WILL BE TAKEN IF AN AMERICAN CROCODILE OR AMERICAN ALLIGATOR IS ENCOUNTERED DURING CONSTRUCTION: ALL WORKERS SHALL BE NOTIFIED, THE ALLIGATOR OR CROCODILE SHALL BE ALLOWED TO LEAVE THE SITE ON ITS OWN AND SHALL NOT BE DISTURBED, HERDED, INJURED, OR KILLED. THE CONTRACTOR SHALL KEEP A DAILY LOG DETAILING ALL SIGHTINGS, INJURIES, OR KILLINGS. AFTER PROJECT COMPLETION, REPORTS SUMMARIZING THESE EVENTS SHALL BE SUBMITTED TO THE MONROE COUNTY PROJECT MANAGER. THE CONTRACTOR SHALL COMPLY WITH ALL FEDERAL AND STATE REQUIREMENTS REGARDING ENDANGERED OR THREATENED SPECIES. SHOULD THESE SPECIES BE ENCOUNTERED, THE CONTRACTOR SHALL CONTACT THE MONROE COUNTY PROJECT MANAGER WITHIN 24 HOURS OF EACH ENCOUNTER.

THE FOLLOWING PRECAUTIONS WILL BE TAKEN IF AN EASTERN INDIGO SNAKE IS ENCOUNTERED DURING CONSTRUCTION: ALL WORKERS SHALL BE NOTIFIED. THE SNAKE SHALL BE ALLOWED TO LEAVE THE SITE ON ITS OWN AND SHALL NOT BE DISTURBED, HERDED, INJURED, OR KILLED. FENCING SHALL NOT BE ERECTED, AS THE SNAKE MAY SUSTAIN INJURY IF IT BECOMES ENTANGLED IN THE MESH. THE CONTRACTOR SHALL COMPLY WITH ALL FEDERAL AND STATE REQUIREMENTS REGARDING ENDANGERED OR THREATENED SPECIES, SHOULD THESE SPECIES BE ENCOUNTERED, THE CONTRACTOR SHALL CONTACT THE MONROE COUNTY PROJECT MANAGER WITHIN 24 HOURS OF EACH ENCOUNTER.

4. PROTECTED HARDWOOK HAMMOCK:

PROTECTED HARDWOOD HAMMOCK HABITAT IS LOCATED ADJACENT TO SOME AREAS OF THE PROJECT, THIS HABITAT CONTAINS PROTECTED VEGETATION AS WELL AS SEVERAL OF THE LISTED SPECIES IDENTIFIED ABOVE. THEREFORE, IT IS CRITICAL THAT THE SAME LEVEL OF PRECAUTION BE APPLIED TO AVOIDING IMPACTS TO THIS HABITAT AS MUST BE APPLIED TO PROTECTED WETLANDS.

PRIOR TO CONSTRUCTION, SILT FENCES MUST BE INSTALLED ALONG THE EDGE OF HAMMOCK VEGETATION TO REDUCE DUST FROM ENTERING THE HAMMOCK FLOOR AND TO CLEARLY DELINEATE THE AREAS THAT MUST BE AVOIDED DURING CONSTRUCTION ACTIVITIES, INCLUDING STAGING, WALKING, AND EQUIPMENT MOVEMENTS.

5. GENERAL VEGETATION CLEARING AND TRIMMING:

PROJECT CONSTRUCTION ACTIVITIES WITHIN THE PROJECT LIMITS OF CONSTRUCTION (LOC) MAY REQUIRE TRIMMING OF PORTIONS OF TREES AND SHRUBS THAT EXTEND INTO THE LOC FROM VEGETATION THAT IS LOCATED OUTSIDE OF BUT ADJACENT TO THE LOC. THESE TREES AND SHRUBS MUST BE PROTECTED WHERE FEASIBLE.

ALL TRIMMING OF NATIVE TREES AND SHRUBS, AND ANY ROOT TRIMMING OR PRUNING NECESSARY TO CONSTRUCT THE PROJECT, MUST BE CONDUCTED BY OR PERFORMED UNDER THE DIRECT SUPERVISION OF A CERTIFIED ARBORIST, CERTIFIED BY THE INTERNATIONAL SOCIETY OF ARBORICULTURE. COST TO BE INCLUDED IN THE RELATED BID ITEM.

THE CLEARING OR REMOVAL OF EXISTING NATIVE VEGETATION LOCATED OUTSIDE THE PROJECT LOCATION IS PROHIBITED, UNLESS OTHERWISE INDICATED IN THE PLANS. IF NATIVE VEGETATION, INCLUDING LANDSCAPING MATERIALS, LOCATED OUTSIDE SAID AREAS IS IMPACTED WITHOUT AUTHORIZATION OR TREES SPECIFIED TO BE PROTECTED IN THE PROJECT PLANS ARE IMPACTED, THE CONTRACTOR SHALL BE RESPONSIBLE FOR ALL NECESSARY REPLACEMENTS. REPLACEMENT VEGETATION MUST BE APPROVED BY THE MONROE COUNTY PROJECT MANAGER OR HIS DESIGNEE. THE CONTRACTOR SHALL WARRANT THE ESTABLISHMENT AND SURVIVAL OF THE REPLACEMENT MATERIAL FOR A PERIOD OF AT LEAST ONE YEAR FOLLOWING ITS INSTALLATION.

WHERE PROJECT CONSTRUCTION REQUIRES CLEARING OR TRIMMING OF EXISTING TREES OR SHRUBS, THE CONTRACTOR SHALL FIRST HAVE A QUALIFIED BIOLOGIST THOROUGHLY INSPECT THE AREA TO BE IMPACTED FOR THE PRESENCE OF LISTED SPECIES AND/OR BIRD NESTS. THIS INSPECTION SHALL BE CONDUCTED NO SOONER THAN ONE WEEK PRIOR TO STARTING THE VEGETATION CLEARING/TRIMMING ACTIVITIES IN A PARTICULAR PORTION OF THE PROJECT. SHOULD PRESENCE OF A LISTED SPECIES OR A BIRD'S NEST BE ENCOUNTERED, THE QUALIFIED BIOLOGIST SHALL MARK THE LOCATION AND IMMEDIATELY NOTIFY THE MONROE COUNTY PROJECT MANAGER (OR MANAGER'S DESIGNEE). NO CLEARING OR TRIMMING OF EXISTING TREES OR SHRUBS SHALL BE CONDUCTED WITHIN FIFTY (50) FEET OF AN IDENTIFIED LISTED SPECIES OR NEST UNTIL THE MONROE COUNTY PROJECT MANAGER (OR MANAGER'S DESIGNEE) NOTIFIES THE CONTRACTOR THAT WORK CAN PROCEED IN THIS BUFFER AREA.

THE OFFICIAL RECORD OF THIS SHEET IS THE ELECTRONIC FILE DIGITALLY SIGNED AND SEALED UNDER RULE 61G15-23.004, F.A.C.

LEGEND

- RIGHT OF WAY
- PROPERTY LINE
- SILT FENCE
- PROP. CATCH BASIN
- PROP. MANHOLE
- MILLING & RESURFACING
- MILLING, RESURFACING & OVERBUILD
- RECONSTRUCTION
- BAHIA
- NO 57 STONE
- PALM TREE
- TREE
- ORNAMENTAL TREE
- FIRE HYDRANT
- WATER VALVE
- VALVE
- SANITARY MANHOLE
- SANITARY VALVE
- UTILITY POLE
- MAILBOX
- SIGN
- EL. X.XX — SPOT ELEV./RIM ELEV.
- HP EL. X.XX — HIGH POINT ELEV.
- RUNOFF DIRECTION OF FLOW
- RUNOFF DIRECTION OF FLOW AT EOP

ABBREVIATIONS

ABND	ABANDONED
ASTM	AMERICAN SOCIETY FOR TESTING AND MATERIAL
AVE	AVENUE
BL/℄	BASELINE
CB	CATCH BASIN
CL/℄	CENTERLINE
E	EASTING
EL./ELEV	ELEVATION
EOP	EDGE OF PAVEMENT
EOR	ENGINEER OF RECORD
EXIST	EXISTING
FT	FEET
HP	HIGH POINT
HORIZ	HORIZONTAL
LT	LEFT
MAX	MAXIMUM
MIN	MINIMUM
N	NORTHING-NORTH
NAVD	NORTH AMERICAN VERTICAL DATUM
NTS	NOT TO SCALE
OE	OVERHEAD ELECTRICAL
PC	POINT OF CURVATURE
PGL	PROFILE GRADE LINE
PGP	PROFILE GRADE POINT
PI	POINT OF INTERSECTION
PROP	PROPOSED
PT	POINT
RAD/R	RADIUS
RT	RIGHT
R/W	RIGHT OF WAY
SAN/SS/S	SANITARY SEWER
SD	STORM DRAINAGE
STA	STATION
STD	STANDARD
T.B.M.	TEMPORARY BENCH MARK
TOP	TOP OF PIPE
TYP	TYPICAL
VERT	VERTICAL
WM	WATERMAIN

APPLICABLE CODES AND STANDARD SPECIFICATIONS:

1. FLORIDA DEPARTMENT OF TRANSPORTATION (FDOT) DESIGN STANDARDS FY 2019-20.
2. FLORIDA DEPARTMENT OF TRANSPORTATION (FDOT) SPECIFICATIONS, 2019.
3. FLORIDA DEPARTMENT OF TRANSPORTATION (FDOT) MANUAL OF UNIFORM MINIMUM STANDARDS FOR DESIGN, CONSTRUCTION AND MAINTENANCE FOR STREETS AND HIGHWAYS (FLORIDA GREENBOOK), 2018.
4. MANUAL FOR UNIFORM TRAFFIC CONTROL DEVICES (MUTCD), 2009.
5. FLORIDA DEPARTMENT OF ENVIRONMENTAL PROTECTION (FDEP).
6. SOUTH FLORIDA WATER MANAGEMENT DISTRICT (SFWMD).
7. U.S. ARMY CORPS OF ENGINEERS (USACOE).

THE OFFICIAL RECORD OF THIS SHEET IS THE ELECTRONIC FILE DIGITALLY SIGNED AND SEALED UNDER RULE 61G15-23.004, F.A.C.

REVISIONS

DATE	DESCRIPTION	DATE	DESCRIPTION

ANDRES CARDONA, P.E.
P.E. LICENSE NUMBER 63917
WSP USA, 7650 CORPORATE CENTER DRIVE,
SUITE 300, MIAMI, FLORIDA 33126
CERTIFICATE OF AUTHORIZATION 01462

SEA LEVEL RISE ROADWAY AND DRAINAGE PILOT PROJECT (KEY LARGO AND BIG PINE KEY)
MONROE COUNTY - DEPARTMENT OF ENGINEERING

PROJECT NOTES

SHEET NO. G-9B

THE FOLLOWING NARRATIVE OF THE STORMWATER POLLUTION PREVENTION PLAN CONTAINS REFERENCES TO THE STANDARD SPECIFICATIONS FOR ROAD AND BRIDGE CONSTRUCTION, THE DESIGN STANDARDS, AND OTHER SHEETS OF THESE CONSTRUCTION PLANS. THE FIRST SHEET OF THE CONSTRUCTION PLANS (CALLED THE KEY SHEET) CONTAINS AN INDEX TO THE OTHER SHEETS: THE COMPLETE STORMWATER POLLUTION PREVENTION PLAN INCLUDES SEVERAL ITEMS: THIS NARRATIVE DESCRIPTION, THE DOCUMENTS REFERENCED IN THIS NARRATIVE, THE CONTRACTOR'S APPROVED EROSION CONTROL PLAN REQUIRED BY SPECIFICATION SECTION 104, AND REPORTS OF INSPECTIONS MADE DURING CONSTRUCTION.

1.0 SITE DESCRIPTION:

1.A. NATURE OF CONSTRUCTION ACTIVITY

THE PROJECT CONSIST OF MILLING, RESURFACING, OVERBUILD & RECONSTRUCTION OF THE STREETS DETAILED BELOW IN MONROE COUNTY, FLORIDA. THIS INVOLVES SWALE REGRADING AND UNDERGROUND STORMDRAIN SYSTEMS FOR STORMWATER MANAGEMENT.

1. KEY LARGO
   FATHER TONY WAY
   AVE J

1.A. SEQUENCE OF MAJOR SOIL DISTURBING ACTIVITIES:

IN THE SEDIMENT AND EROSION CONTROL PLAN, THE CONTRACTOR SHALL PROVIDE A DETAILED SEQUENCE OF CONSTRUCTION FOR ALL CONSTRUCTION ACTIVITIES. THE CONTRACTOR SHALL FOLLOW THE SEQUENCE OF MAJOR ACTIVITIES DESCRIBED BELOW, UNLESS THE CONTRACTOR PROPOSES A DIFFERENT SEQUENCE THAT IS EQUAL OR BETTER AT CONTROLLING EROSION AND TRAPPING SEDIMENT AND IS APPROVED BY THE ENGINEER.

1.A.1. PERMANENT OR TEMPORARY EROSION & SEDIMENT CONTROL MEASURES SHALL BE INSTALLED AT THE EARLIEST PRACTICABLE TIME CONSISTENT WITH GOOD CONSTRUCTION PRACTICE. ONE OF THE FIRST CONSTRUCTION ACTIVITIES SHALL BE THE PLACEMENT OF TEMPORARY EROSION & SEDIMENT CONTROL MEASURES AROUND THE PERIMETER OF THE PROJECT, THE INITIAL WORK AREA, & OTHER AFFECTED AREAS TO PREVENT STORM WATER POLLUTION. CLOSE ATTENTION SHALL BE PAID TO THE MANGROVES AND WETLAND AREAS NEARBY THE AVE J.

1.A.2. CONFORMANCE WITH SWPPP DOES NOT RELIEVE THE CONTRACTOR OF RESPONSIBILITIES TO PROTECT ADJACENT PROPERTIES, FEATURES & NATURAL ENVIRONMENT FROM THE POSSIBLE DAMAGE IMPACT THAT MAY ARISE AS A RESULT OF THE CONSTRUCTION.

1.A.3. CONTRACTOR SHALL INSTALL PERIMETER POLLUTION PREVENTION CONTROLS AFTER CLEARING & GRUBBING BUT BEFORE BEGINNING OTHER CONSTRUCTION PHASES. CONTRACTOR SHALL REMOVE PERIMETER CONTROLS ONLY AFTER ALL AREAS HAVE BEEN STABILIZED.

1.A.4. MODIFICATIONS OR CHANGES TO THE INFORMATION DEPICTED ON THE STORMWATER POLLUTION PREVENTION PLAN MUST BE SUBMITTED THE FLORIDA DEPARTMENT OF ENVIRONMENTAL PROTECTION (FDEP) FOR APPROVAL.

1.A.5. IF ADDITIONAL EROSION & SEDIMENT CONTROL BMP'S ARE REQUESTED BY ANY REGULATORY AGENCY, THE CONTRACTOR SHALL PROMPTLY IMPLEMENT SAID MEASURES AFTER APPROVAL OF EOR/JURISDICTIONS.

1.A.6. CONTRACTOR SHALL MEET THE MAINTENANCE REQUIREMENTS AS INDICATED IN SECTION 2.0 CONTROLS.

1.A. AREA ESTIMATES

TOTAL SITE AREA: 1.91 ACRES
TOTAL AREA TO BE DISTURBED: 1.91 ACRES

1.B. RUNOFF DATA:

RUNOFF COEFFICIENTS:

THE WEIGHTED RUN-OFF COEFFICIENT IS 0.55.

1.C. SOILS DATA:

LIGHT BROWN LIMESTONE WITH FINE SAND:
FROM 1.3-2.5FT TO 14FT (MAX DEPTH OF THE BORINGS)

1.D. RECEIVING WATER BODIES INFORMATION:

THERE ARE NO RECEIVING WATER BODIES AFFECTED DIRECTLY UNDER THIS PROJECT.

1.E. SITE MAP:

THE CONSTRUCTION PLANS ARE BEING USED AS THE SITE MAPS. THE LOCATION OF THE REQUIRED INFORMATION IS DESCRIBED BELOW. THE SHEET NUMBERS FOR THE PLAN SHEETS REFERENCED ARE IDENTIFIED ON THE KEY SHEET OF THESE CONSTRUCTION PLANS.

- APPROXIMATE SLOPES: THE SLOPES OF THE SITE ARE TO REMAIN AS EXISTING OR AS SHOWN IN PLANS. ANY INCIDENTAL REGRADING WILL HAVE POSITIVE DRAINAGE INTO THE PROPOSED STORM DRAIN SYSTEMS.
- AREAS OF SOIL DISTURBANCE: THE AREAS TO BE DISTURBED ARE INDICATED ON THE CONSTRUCTION PLANS. ANY AREAS WHERE PERMANENT FEATURES ARE SHOWN TO BE CONSTRUCTED ABOVE OR BELOW GROUND WILL BE DISTURBED.
- AREAS NOT TO BE DISTURBED; ROADSIDE AREAS WHERE MILLING AND RESURFACING OCCUR WILL NOT BE DISTURBED UNLESS PERMANENT FEATURES ARE SHOWN TO BE CONSTRUCTED ABOVE OR BELOW GROUND.
- LOCATIONS OF TEMPORARY CONTROLS: THESE ARE SHOWN ON THE CONSTRUCTION PLANS. THE CONTRACTOR'S EROSION CONTROL SHEETS MAY PROVIDE EXCEPTIONS FOR THE CONTROLS ASSOCIATED WITH CONSTRUCTION AREAS.
- LOCATIONS OF PERMANENT CONTROLS; THESE ARE SHOWN ON THE CONSTRUCTION PLANS.
- SURFACE WATERS: THERE ARE NO SURFACE WATERS WITHIN THE ROADWAY WORK PROPOSED SINCE THE WORK IS LIMITED TO WITHIN THE EXISTING ROADWAY RIGHT-OF-WAYS.
- DISCHARGE POINTS TO SURFACE WATERS:
  REFER TO ITEM I.E.

2.0 CONTROLS

2.A POLLUTION PREVENTION CONTROLS.

THE CONTRACTOR SHALL PROVIDE FOR THE DESIGN, INSTALLATION, IMPLEMENTATION, AND MAINTENANCE OF EFFECTIVE POLLUTION PREVENTION MEASURES TO ACCOMPLISH ALL OF THE FOLLOWING:

2.A.1 MINIMIZE THE DISCHARGE OF POLLUTANTS FROM EQUIPMENT AND VEHICLE WASHING, WHEEL WASH WATER, AND OTHER WASH WATERS. TREAT WASH WATERS A TREATMENT SYSTEM SO THAT THEY DO NOT CAUSE OR CONTRIBUTE OR VIOLATIONS OF WATER OUALITY STANDARDS.

2.A.2 MINIMIZE THE EXPOSURE OF BUILDING MATERIALS, CONSTRUCTION WASTES, TRASH, LANDSCAPE MATERIALS, FERTILIZERS, PESTICIDES, HERBICIDES, DETERGENTS, SANITARY WASTE, AND OTHER MATERIALS PRESENT ON THE SITE TO PRECIPITATION AND TO STORMWATER.

2.A.3 MINIMIZE THE DISCHARGE OF POLLUTANTS FROM SPILLS AND LEAKS; AND IMPLEMENT CHEMICAL SPILL AND LEAK PREVENTION AND RESPONSE PROCEDURES.

2.A.4 CONTROL WASTES, SUCH AS DISCARDED MATERIALS. CHEMICALS, LITTER, AND SANITARY WASTE. IN ACCORDANCE WITH ALL APPLICABLE STATE, LOCAL, AND FEDERAL REGULATIONS.

2.A.5 LIMIT THE APPLICATION, GENERATION, AND MIGRATION OF TOXIC SUBSTANCES; AND PROPERLY STORE AND DISPOSE OF TOXIC MATERIALS.

2.B EROSION AND SEDIMENT CONTROLS.

THE CONTRACTOR SHALL PROVIDE FOR THE DESIGN, INSTALLATION, IMPLEMENTATION, AND MAINTENANCE OF APPROPRIATE EROSION AND SEDIMENT CONTROLS TO ACCOMPLISH ALL OF THE FOLLOWING

2.B.1 CONTROL STORMWATER VOLUME AND VELOCITY WITHIN THE SITE TO MINIMIZE SOIL EROSION.

2.B.2 CONTROL STORMWATER PEAK DISCHARGE RATES AND VOLUME TO AVOID EROSION AT VEGETATED AREAS WITHIN PROJECT LIMITS.

2.B.3 MINIMIZE THE AMOUNT OF SOIL EXPOSED DURING THE CONSTRUCTION ACTIVITY. EROSION AND SEDIMENT CONTROLS. SHALL PROVIDE FOR THE DESIGN, INSTALLATION, AND MAINTENANCE OF APPROPRIATE EROSION AND SEDIMENT.

2.B.5 MINIMIZE THE DISTURBANCE OF STEEP SLOPES. MINIMIZE SEDIMENT DISCHARGES FROM THE SITE. THE DESIGN, INSTALLATION, AND MAINTENANCE OF EROSION AND SEDIMENT CONTROLS SHALL ADDRESS FACTORS SUCH AS THE AMOUNT, FREQUENCY, INTENSITY, AND DURATION OF PRECIPITATION; THE NATURE OF THE RESULTING STORMWATER; AND SOIL CHARACTERISTICS, INCLUDING THE RANGE OF SOIL PARTICLE SIZES EXPECTED TO BE PRESENT ON THE SITE.

2.B.6 MINIMIZE OFF-SITE VEHICLE TRACKING OF SEDIMENTS ONTO PAVED SURFACES AND THE GENERATION OF DUST. IF SEDIMENT ESCAPES THE CONSTRUCTION SITE, OFF-SITE ACCUMULATIONS OF SEDIMENT MUST BE REMOVED AT A FREQUENCY SUFFICIENT TO MINIMIZE OFF-SITE IMPACTS.

2.B.7 WHERE FEASIBLE, DIRECT STORMWATER TO VEGETATED AREAS TO INCREASE SEDIMENT REMOVAL TO PROVIDE AND MAINTAIN NATURAL BUFFERS ADJACENT TO SURFACE WATERS OF THE STATE.

2.B.8 MINIMIZE SOIL COMPACTION AND PRESERVE TOPSOIL.

THE OFFICIAL RECORD OF THIS SHEET IS THE ELECTRONIC FILE DIGITALLY SIGNED AND SEALED UNDER RULE 61G15-23.004, F.A.C.

2.C SEDIMENT BASINS

2.C.1 AT A MINIMUM, SILT FENCES OR EQUIVALENT SEDIMENT CONTROLS ARE REQUIRED FOR ALL SIDESLOPE AND DOWNSLOPE BOUNDARIES OF THE CONSTRUCTION AREA.

2.D.MAINTENANCE REQUIREMENTS:

2.D.1 THE PLAN SHALL INCLUDE A DESCRIPTION OF PROCEDURES THAT WILL BE FOLLOWED TO ENSURE THE TIMELY MAINTENANCE OF VEGETATION, EROSION AND SEDIMENT CONTROLS, STORMWATER MANAGEMENT PRACTICES, AND OTHER PROTECTIVE MEASURES AND BMPS SO THEY WILL REMAIN IN GOOD AND EFFECTIVE OPERATING CONDITION.

2.D.2 THE CONTRACTOR SHALL BE RESPONSIBLE FOR MAINTENANCE REPAIRS OF EROSION & SEDIMENT CONTROL/SWPPP DEVICES PER THE FDOT STANDARD SPECIFICATION FOR ROAD & BRIDGE CONSTRUCTION (CURRENT EDITION). THE MAINTENANCE OF THESE DEVICES SHALL OCCUR UNTIL THE COUNTY'S REPRESENTATIVE ESTABLISHES AREAS AS PERMANENTLY STABILIZED. THE CONTRACTOR SHALL REMOVE ALL TEMPORARY EROSION AFTER COMPLETION OF THE PROJECT.

2.D.3 EROSION & SEDIMENT CONTROL MEASURES SHALL BE ADEQUATELY MAINTAINED BY THE CONTRACTOR TO PERFORM THE INTENDED FUNCTION DURING CONSTRUCTION OF THE PROJECT.

2.D.4 THE CONTRACTOR SHALL MONITOR ALL POLLUTION CONTROL DEVICES TO ENSURE SUFFICIENT CONVEYANCE OF STORMWATER RUNOFF & TO ELIMINATE SOIL EROSION DURING CONSTRUCTION.

2.D.5 CONTRACTOR SHALL COVER LOADED TRUCKS WITH TARPAULINS.

2.D.6 CONTRACTOR SHALL REMOVE EXCESS DIRT FROM WORK SITE ON A DAILY BASIS.

2.D.7 BUILT-UP SEDIMENT WILL BE REMOVED FROM THE STAKED SILT FENCE WHEN IT REACHES ONE-THIRD OF THE FENCE BARRIER OR WHENEVER FLOW IS IMPEDED,

2.D.8 AT NO TIME SHOULD SEDIMENTS BE ALLOWED TO ACCUMULATE WITHIN DRAINAGE STRUCTURE & CONVEYANCE PIPELINES. STRUCTURES & PIPELINES SHALL BE CLEANED PRIOR TO PAVING. THE CLEANING OPERATIONS SHALL NOT FLUSH SEDIMENT-LADEN WATER INTO THE DOWNSTREAM SYSTEM.

2.D.9 STOCKPILE OF EARTH & OTHER CONSTRUCTION RELATED MATERIAL SHALL BE PROTECTED AGAINST ACCIDENTAL TRANSPORTATION FROM PROJECT SITE BY WIND & WATER FLOW.

2.D.10 ALL STORM DRAINAGE SYSTEMS MADE OPERABLE DURING CONSTRUCTION SHALL BE PROTECTED SO THAT SEDIMENT WATER CANNOT GAIN ENTRY INTO THE CONVEYANCE SYSTEM WITHOUT FIRST BEING FILTERED OR OTHER WISE TREATED TO REMOVE SEDIMENTS.

3.0 OTHER CONTROLS

THE FOLLOWING NON-STORMWATER DISCHARGES ARE PROHIBITED:

3.A WASTEWATER FROM WASHOUT OF CONCRETE

3.B WASTEWATER FROM WASHOUT CONCRETE AND CLEANOUTS OF STUCCO, PAINT, FORM RELEASE OILS, CURING COMPOUNDS AND OTHER CONSTRUCTION MATERIALS.

3.C FUELS, OILS, OR OTHER POLLUTANTS ASSOCIATED WITH VEHICLE AND EQUIPMENT OPERATION AND MAINTENANCE.

3.D SOAPS OR SOLVENTS USED IN VEHICLE OR EQUIPMENT WASHING OR CLEANING.

3.E THE CONTRACTOR SHALL IDENTIFY ALL ANTICIPATED NON-STORMWATER DISCHARGES (EXCEPT FLOWS FROM FIRE FIGHTING ACTIVITIES). THE CONTRACTOR SHALL DESCRIBE THE PROPOSED MEASURES TO PREVENT POLLUTION OF THESE NON-STORMWATER DISCHARGES. IF THE CONTRACTOR ENCOUNTERS CONTAMINATED SOIL OR GROUNDWATER, SUCH OCCURRENCES MUST BE REPORTED IMMEDIATELY TO THE ENGINEER AND OWNERS REPRESENTATIVE.

4.0 INSPECTIONS.

AN INSPECTOR QUALIFIED IN ACCORDANCE WITH PART 11.12. OF DEP DOCUMENT EFFECTIVE FEBRUARY 17, 2009, INCORPORATED BY REFERENCE IN PARAGRAPH F.A.C., (PROVIDED BY THE OWNER OR OPERATOR) SHALL PERFORM ALL REQUIRED SITE INSPECTIONS. SITE INSPECTIONS MUST INCLUDE ALL POINTS OF DISCHARGE INTO SURFACE WATERS OR AN MS4; DISTURBED AREAS OF THE CONSTRUCTION SITE THAT HAVE NOT BEEN FINALLY STABILIZED; AREAS USED FOR STORAGE OF MATERIALS THAT ARE EXPOSED TO PRECIPITATION; STRUCTURAL CONTROLS; AND LOCATIONS WHERE VEHICLES ENTER OR EXIT THE SITE. SITE INSPECTIONS SHALL BE CONDUCTED AT LEAST ONCE EVERY SEVEN CALENDAR DAYS AND WITHIN 24 HOURS OF THE END OF A STORM THAT IS 0.50 INCHES OR GREATER. INSPECTIONS SHALL INCLUDE:

4.A DISTURBED AREAS AND AREAS USED FOR STORAGE OF MATERIALS THAT ARE EXPOSED TO PRECIPITATION SHALL BE INSPECTED FOR EVIDENCE OF, OR THE POTENTIAL FOR, POLLUTANTS ENTERING THE STORMWATER SYSTEM. THE STORMWATER MANAGEMENT SYSTEM AND EROSION AND SEDIMENT CONTROL MEASURES IDENTIFIED IN THE PLAN SHALL BE OBSERVED TO ENSURE THAT THEY ARE OPERATING CORRECTLY. DISCHARGE LOCATIONS OR POINTS SHALL BE INSPECTED TO ASCERTAIN WHETHER EROSION AND SEDIMENT CONTROL AND STORMWATER TREATMENT MEASURES ARE EFFECTIVE IN PREVENTING OR MINIMIZING THE DISCHARGE OF POLLUTANTS, INCLUDING RETAINING SEDIMENT ONSITE PURSUANT TO RULE 62-40.432, F.A.C. LOCATIONS WHERE VEHICLES ENTER OR EXIT THE SITE SHALL BE INSPECTED FOR EVIDENCE OF OFFSITE SEDIMENT TRACKING.

4.B BASED ON THE RESULTS OF THE INSPECTION, ALL MAINTENANCE OPERATIONS NEEDED TO ASSURE PROPER OPERATION OF ALL CONTROLS, BMPS, PRACTICES, OR MEASURES IDENTIFIED IN THE STORMWATER POLLUTION PREVENTION PLAN SHALL BE DONE IN A TIMELY MANNER, BUT IN NO CASE LATER THAN 7 CALENDAR DAYS FOLLOWING THE INSPECTION. IF NEEDED, POLLUTION PREVENTION CONTROLS, BMPS, AND MEASURES IDENTIFIED IN THE PLAN SHALL BE REVISED AS NECESSARY TO ASSURE PROPER OPERATION OF ALL CONTROLS, BMPS, PRACTICES, OR MEASURES IDENTIFIED IN THE STORMWATER POLLUTION PREVENTION PLAN. SUCH REVISIONS SHALL PROVIDE FOR TIMELY IMPLEMENTATION OF ANY CHANGES TO THE PLAN WITHIN 7 CALENDAR DAYS FOLLOWING THE INSPECTION.

4.C A REPORT SUMMARIZING THE SCOPE OF THE INSPECTION; NAME(S) AND QUALIFICATIONS OF PERSONNEL MAKING THE INSPECTION; THE DATE(S) OF THE INSPECTION; RAINFALL DATA: MAJOR OBSERVATIONS RELATING TO THE IMPLEMENTATION OF THE STORMVVATER POLLUTION PREVENTION PLAN; AND ACTIONS TAKEN IN ACCORDANCE WITH THE REQUIREMENTS OF THIS PERMIT, SHALL BE MADE AND RETAINED AS PART OF THE STORMWATER POLLUTION PREVENTION PLAN. SUCH REPORTS SHALL IDENTIFY ANY INCIDENTS OF NON-COMPLIANCE, WHERE A REPORT DOES NOT IDENTIFY ANY INCIDENTS OF NON-COMPLIANCE, THE REPORT SHALL CONTAIN A CERTIFICATION THAT THE FACILITY IN COMPLIANCE WITH THE STORMWATER POLLUTION PREVENTION PLAN AND THE GENERIC PERMIT FOR STORMWATER DISCHARGE FROM LARGE AND SMALL CONSTRUCTION ACTIVITIES.

5.0 WETLANDS.

5.A CONTRACTOR SHALL INSTALL AND MAINTAIN SILT FENCE ON NEARBY WETLANDS FOR THE DURATION OF THE CONSTRUCTION ACTIVITIES.

5.B CONTRACTOR SHALL STABILIZE NEWLY CONSTRUCTED SLOPES ON ADJACENT WETLANDS TO PREVENT EROSION AND TURBIDITY, AND ALSO STABILIZE DISTURBED AREAS IMMEDIATELY AFTER FINAL GRADE HAS BEEN ATTAINED OR DURING INTERIM PERIODS OF INACTIVITY RESULTING FROM CONSTRUCTION DELAYS.

6.0 PERMITS

CONTRACTOR IS RESPONSIBLE FOR OBTAINING AN NPDES STORMWATER PERMIT COVERAGE BY SUBMITTING THE FOLLOWING TO THE FLORIDA DEPARTMENT OF ENVIRONMENTAL PROTECTION (FDEP).

6.A PREPARE AND SUBMIT A CGP NOTICE OF INTENT (NOI) (DEP DEVELOP AND SUBMIT A STORMWATER POLLUTION PREVENTION PLAN (SWPPP). IN PART, THE PLAN MUST INCLUDE THE FOLLOWING:
A SITE EVALUATION OF HOW AND WHERE POLLUTANTS MAY BE MOBILIZED BY STORMWATER.

- A SITE PLAN FOR MANAGING STORMWATER RUNOFF.
- IDENTIFICATION OF APPROPRIATE EROSION AND SEDIMENT
- CONTROLS AND STORMWATER BEST MANAGEMENT PRACTICES
- (BMPs) TO REDUCE EROSION, SEDIMENTATION, AND STORMWATER POLLUTION.
- A MAINTENANCE AND INSPECTION SCHEDULE.
- A RECORDKEEPING PROCESS.
- IDENTIFICATION OF STORMWATER EXIT AREAS.

6.B PREPARE AND SUBMIT A NOTICE OF TERMINATION (NOT) (DEP FORM 62-621.300(6) IN ORDER TO DISCONTINUE PERMIT COVERAGE. ALSO AN NOT MAY BE SUBMITTED ONLY WHEN THE SITE MEETS THE ELIGIBILITY REQUIREMENTS FOR TERMINATION SPECIFIED IN THE CGP.

THE OFFICIAL RECORD OF THIS SHEET IS THE ELECTRONIC FILE DIGITALLY SIGNED AND SEALED UNDER RULE 61G15-23.004, F.A.C.

REVISIONS			
DATE	DESCRIPTION	DATE	DESCRIPTION

ANDRES CARDONA, P.E.
P.E. LICENSE NUMBER 63917
WSP USA, 7650 CORPORATE CENTER DRIVE,
SUITE 300, MIAMI, FLORIDA 33126
CERTIFICATE OF AUTHORIZATION 01462

SEA LEVEL RISE ROADWAY AND DRAINAGE PILOT PROJECT (KEY LARGO AND BIG PINE KEY)
MONROE COUNTY - DEPARTMENT OF ENGINEERING

STORMWATER POLLUTION PREVENTION PLAN

SHEET NO.
SW-2B

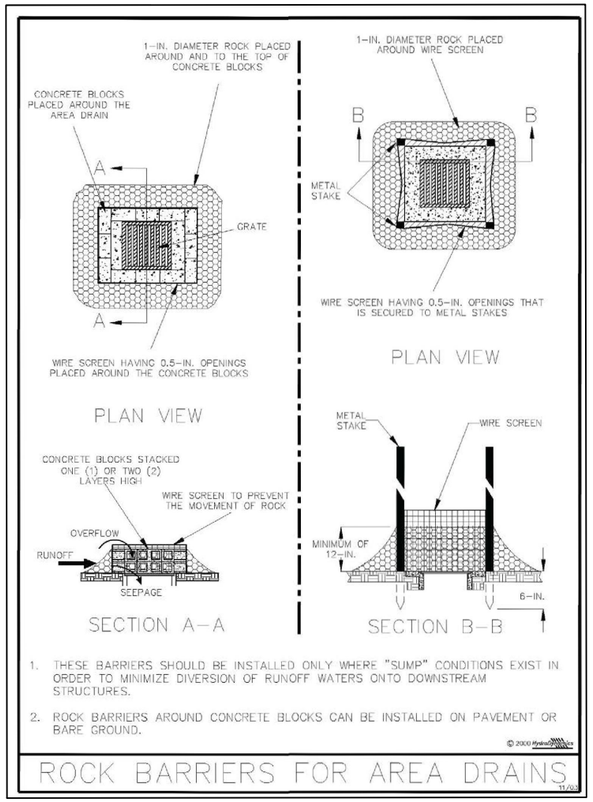

ROCK BARRIERS FOR AREA DRAINS

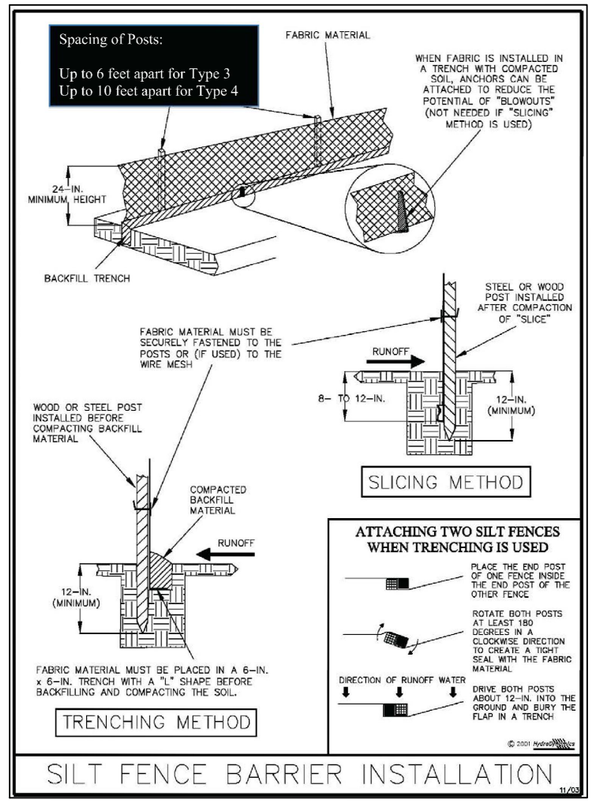

SILT FENCE BARRIER INSTALLATION

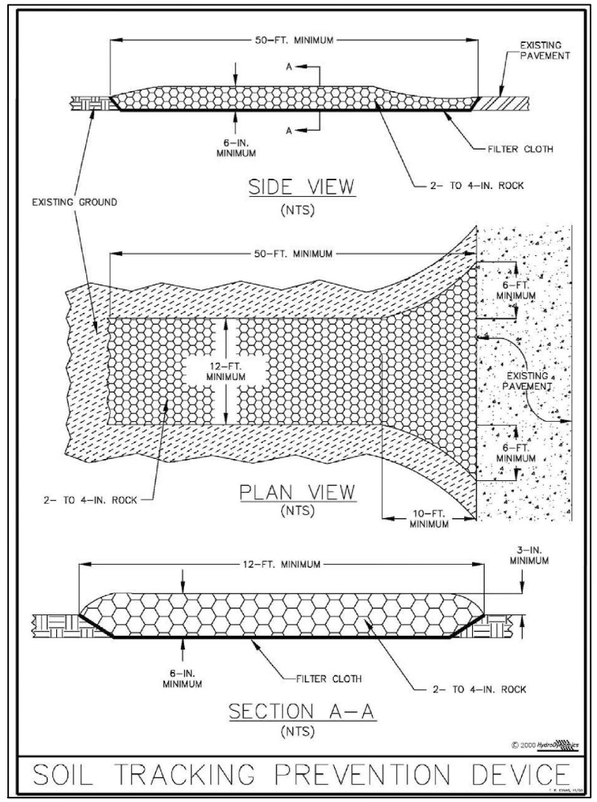

SOIL TRACKING PREVENTION DEVICE

THE OFFICIAL RECORD OF THIS SHEET IS THE ELECTRONIC FILE DIGITALLY SIGNED AND SEALED UNDER RULE 61G15-23.004, F.A.C.

REVISIONS			
DATE	DESCRIPTION	DATE	DESCRIPTION

ANDRES CARDONA, P.E.
P.E. LICENSE NUMBER 63917
WSP USA, 7650 CORPORATE CENTER DRIVE,
SUITE 300, MIAMI, FLORIDA 33126
CERTIFICATE OF AUTHORIZATION 01462

SEA LEVEL RISE ROADWAY AND DRAINAGE PILOT PROJECT (KEY LARGO AND BIG PINE KEY)
MONROE COUNTY - DEPARTMENT OF ENGINEERING

STORMWATER POLLUTION PREVENTION PLAN

SHEET NO.
SW-3B

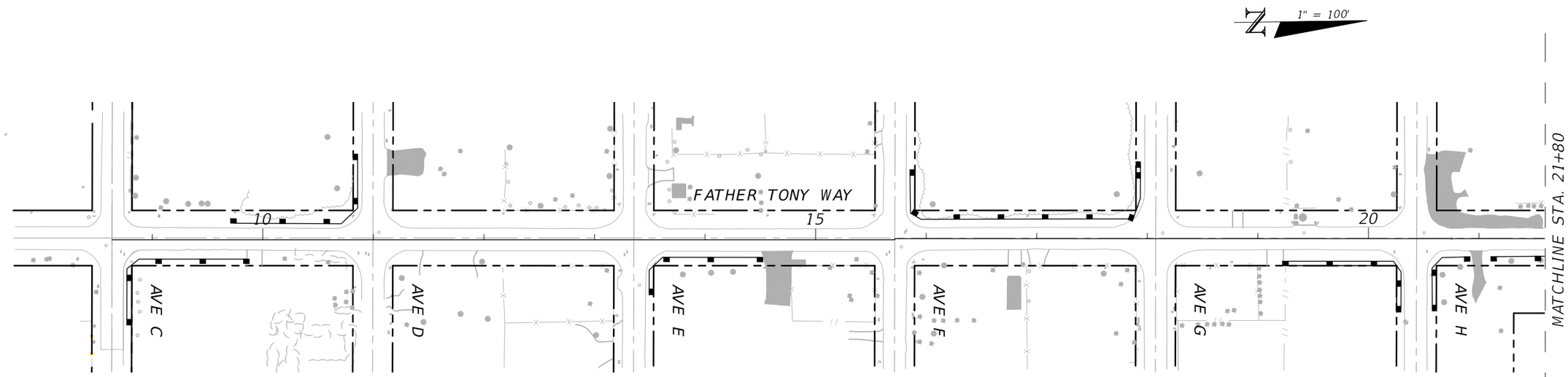

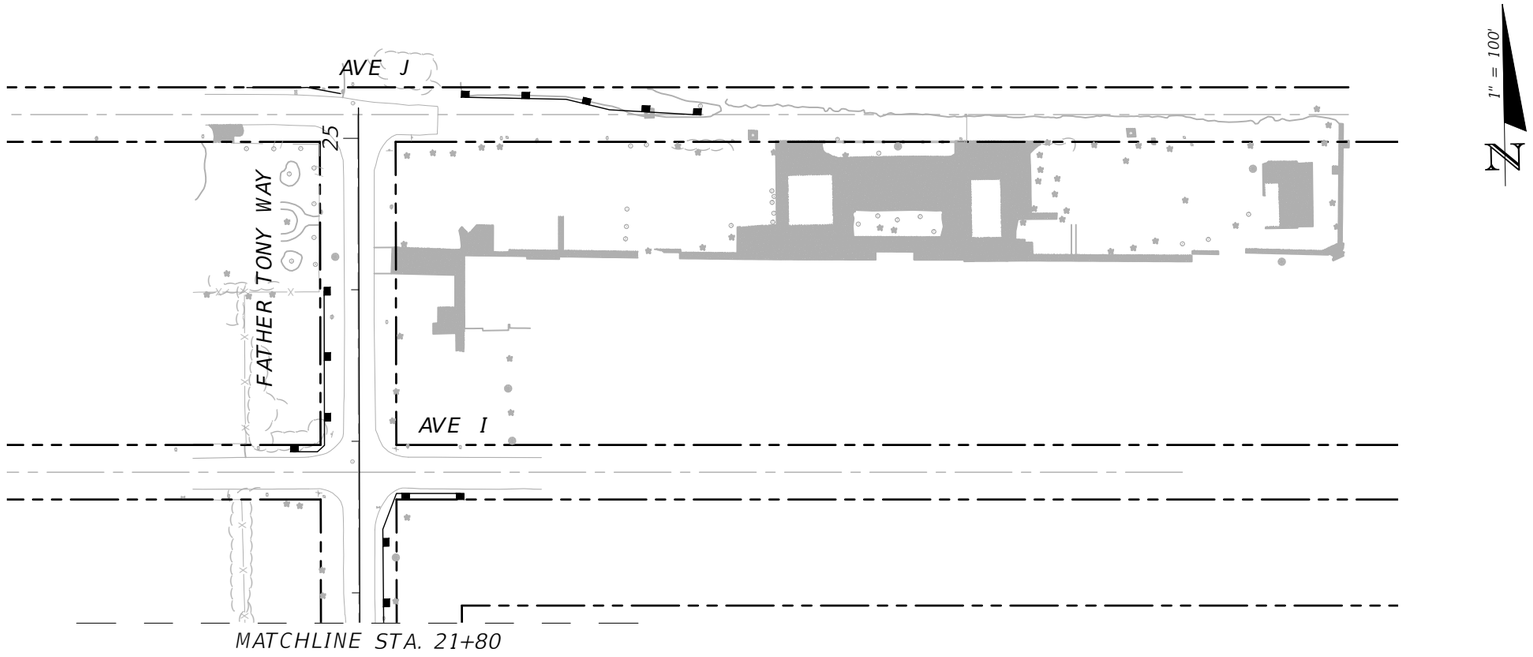

REVISIONS			
DATE	DESCRIPTION	DATE	DESCRIPTION

ANDRES CARDONA, P.E.
P.E. LICENSE NUMBER 63917
WSP USA, 7650 CORPORATE CENTER DRIVE,
SUITE 300, MIAMI, FLORIDA 33126
CERTIFICATE OF AUTHORIZATION 01462

SEA LEVEL RISE ROADWAY AND DRAINAGE PILOT PROJECT (KEY LARGO AND BIG PINE KEY)

MONROE COUNTY - DEPARTMENT OF ENGINEERING

STORMWATER POLLUTION PREVENTION PLAN

SHEET NO. SW-4B

THE OFFICIAL RECORD OF THIS SHEET IS THE ELECTRONIC FILE DIGITALLY SIGNED AND SEALED UNDER RULE 61G15-23.004, F.A.C.

LEGEND

RECONSTRUCTION (SEE SHEET G-5B)

MILLING & RESURFACING

BAHIA

NO 57 STONE

1" = 20'

T.B.M #13

BEGIN PROJECT
BEGIN MILLING & RESURFACING
MATCH EXISTING
STA. 10+65.23
℄ CONST. FATHER TONY WAY

R/W LINE

PROP. INJ. WELL #2

+89.73
35.11 L

R/W LINE
STA. 10+99.69 (O/S 35.08 L)
℄ CONST. FATHER TONY WAY
END MILLING & RESURFACING
MATCH EXISTING

+09.45
35.06 L

+81.67
26.58 L

+17.67
26.58 L

R/W LINE

PROP. 36" STRM PIPE

PROP. 36" STRM PIPE

R/W LINE

LOT 9

HP EL. 2.60'

18'

18'

HP EL. 2.40'

PROP. 24" STRM PIPE

S-03

S-04

+65.23
10.32 L

R25

R25

25'

PROP. EOP

2" WM (ABND)

+70.89
10.77 L

℄ SURVEY FATHER TONY WAY

℄ CONST. FATHER TONY WAY

FATHER TONY WAY

9

10

11

20'

1.6'

+34.45
10.00 L

MILLING &
RESURFACING

N 00° 57' 20" E

END RECONSTRUCTION

+34.90
10.00 R

+65.23
10.16 R

S-02

PROP. INJ. WELL #1

+68.06
10.27 R

S-05

6" WM

4" WM (ABND)

PROP. EOP

HP EL. 2.40'

+81.55
23.42 R

+17.55
23.42 R

+09.90
35.12 R

R/W LINE

EXIST. GRAVEL
DRIVEWAY

EXIST. GRAVEL
DRIVEWAY

R/W LINE

LOT 16

PROP. 48" FM
SEE SHEET PS-4A

HP EL. 2.50'

AVE D

BEGIN RECONSTRUCTION

+89.38
35.06 R

STA. 10+99.52 (O/S 35.09 R)
℄ CONST. FATHER TONY WAY
END MILLING & RESURFACING
MATCH EXISTING

PROP. 36" STRM PIPE
SEE SHEET PS-2B

S-01

R/W LINE

18'

18'

R/W LINE

MATCHLINE STA. - 11+65.33

SCALE
1" = 20' HORIZONTAL
1" = 2' VERTICAL

BEGIN PROJECT
BEGIN MILLING &
RESURFACING
STA. 10+65.23

EXIST. GROUND AT PGL

3.10

2.77

MHW = -0.322

MILLING & RESURFACING

4

2

0

9+00 9+20 9+40 9+60 9+80 10+00 10+20 10+40 10+60 10+80 11+00 11+20 11+40 11+60

THE OFFICIAL RECORD OF THIS SHEET IS THE ELECTRONIC FILE DIGITALLY SIGNED AND SEALED UNDER RULE 61G15-23.004, F.A.C.

REVISIONS			
DATE	DESCRIPTION	DATE	DESCRIPTION

ANDRES CARDONA, P.E.
P.E. LICENSE NUMBER 63917
WSP USA, 7650 CORPORATE CENTER DRIVE,
SUITE 300, MIAMI, FLORIDA 33126
CERTIFICATE OF AUTHORIZATION 01462

SEA LEVEL RISE ROADWAY AND DRAINAGE PILOT PROJECT (KEY LARGO AND BIG PINE KEY)

MONROE COUNTY - DEPARTMENT OF ENGINEERING

ROADWAY PLAN & PROFILE (FATHER TONY WAY)

SHEET NO.

RD-1B

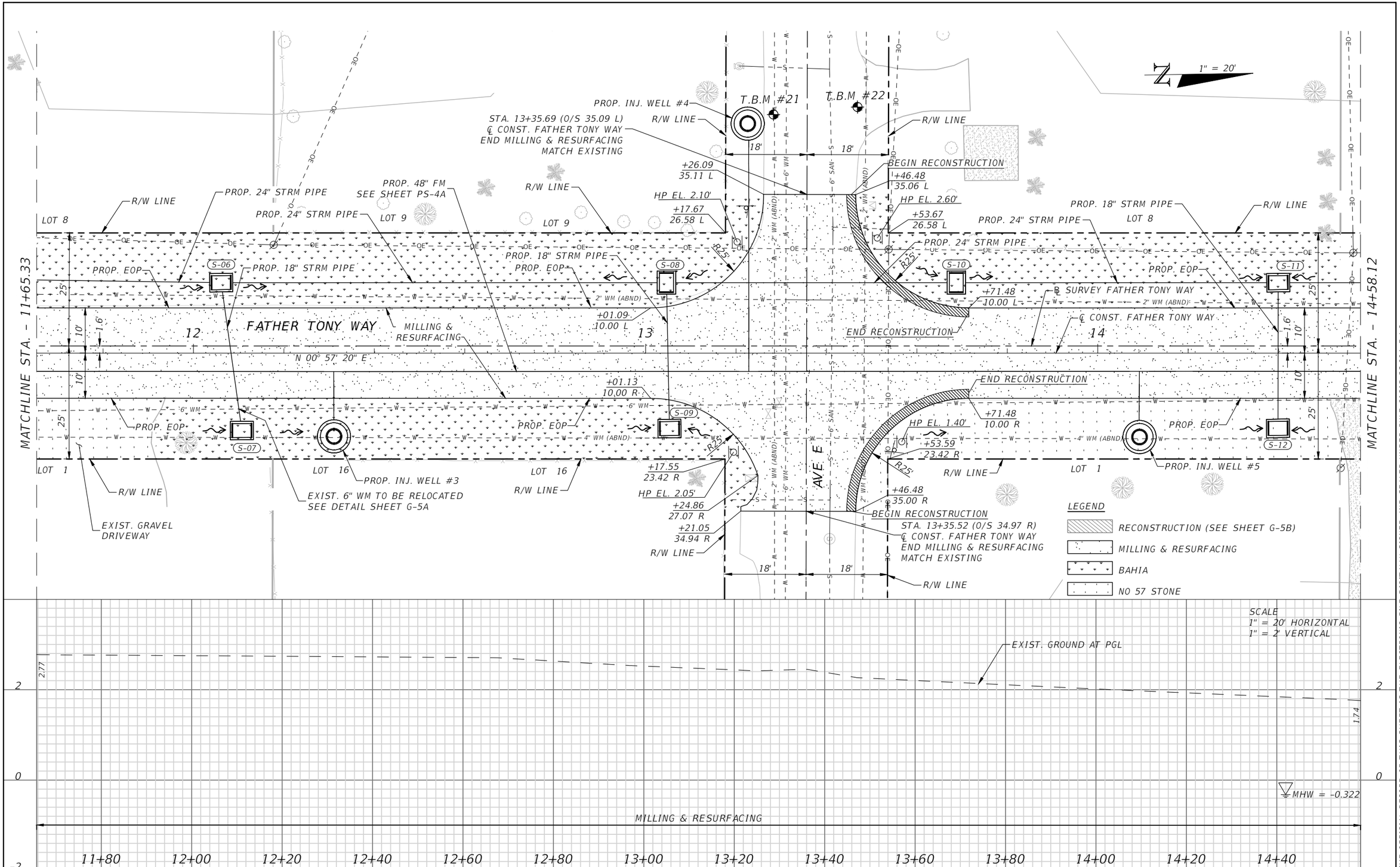

THE OFFICIAL RECORD OF THIS SHEET IS THE ELECTRONIC FILE DIGITALLY SIGNED AND SEALED UNDER RULE 61G15-23.004, F.A.C.

REVISIONS			
DATE	DESCRIPTION	DATE	DESCRIPTION

ANDRES CARDONA, P.E.
P.E. LICENSE NUMBER 63917
WSP USA, 7650 CORPORATE CENTER DRIVE,
SUITE 300, MIAMI, FLORIDA 33126
CERTIFICATE OF AUTHORIZATION 01462

SEA LEVEL RISE ROADWAY AND DRAINAGE PILOT PROJECT (KEY LARGO AND BIG PINE KEY)

MONROE COUNTY - DEPARTMENT OF ENGINEERING

ROADWAY PLAN & PROFILE (FATHER TONY WAY)

SHEET NO. RD-2B

1" = 20'

STA. 15+71.69 (O/S 35.08 L)
℄ CONST. FATHER TONY WAY
END MILLING & RESURFACING
BEGIN RECONSTRUCTION
+81.90
35.06 L
R/W LINE
HP EL. 0.80'
+89.67
25.57 L
STA. AHEAD = 15+71.61 ℄ FATHER TONY WAY
STA. BACK = 15+72.61 ℄ FATHER TONY WAY
R/W LINE
LOT 8
PROP. INJ. WELL #8
LOT 9
R/W LINE
END RECONSTRUCTION
+61.30
36.11 L
HP EL. 1.20'
+61.30
34.94 L
+53.67
26.58 L
LOT 9
PROP. 24" STRM PIPE
R/W LINE
BEGIN RECONSTRUCTION
PROP. 36" FM
SEE SHEET PS-4A
PROP. 24" STRM PIPE
PROP. EOP
+36.30
10.00 L
PROP. INJ. WELL #7
PROP. 18" STRM PIPE
PROP. EOP
+06.90
10.00 L
END RECONSTRUCTION
℄ SURVEY FATHER TONY WAY
MATCHLINE STA. - 14+58.12
MATCHLINE STA. - 17+51.01
15
16
17
N 00° 57' 20" E
N 00° 57' 20" E
BEGIN RECONSTRUCTION
℄ CONST. FATHER TONY WAY
FATHER TONY WAY
END RECONSTRUCTION
PROP. 24" STRM PIPE
+36.63
10.00 R
+07.44
10.00 R
HP EL. 1.10'
MILLING &
RESURFACING
PROP. EOP
EXIST. GRAVEL
DRIVEWAY
+89.55
24.43 R
LOT 16
PROP. EOP
LOT 16
+53.55
23.42 R
PROP. INJ. WELL #6
R/W LINE
HP EL. 0.95'
END RECONSTRUCTION
+61.63
35.00 R
R/W LINE
AVE F
LOT 1
PROP. 24" STRM PIPE
R/W LINE
EXIST. GRAVEL
DRIVEWAY
LOT 16
PROP. 24" STRM PIPE
+82.43
36.06 R
BEGIN RECONSTRUCTION
STA. 15+71.52 (O/S 35.02 R)
℄ CONST. FATHER TONY WAY
END MILLING & RESURFACING
MATCH EXISTING
R/W LINE
EXIST. CONCRETE
DRIVEWAY
18'
18'
S-13
S-14
S-15
S-16
S-17
R25
25'
10'
1.6'
0.6'

LEGEND

- RECONSTRUCTION (SEE SHEET G-5B)
- MILLING & RESURFACING
- BAHIA
- NO 57 STONE

SCALE
1" = 20' HORIZONTAL
1" = 2' VERTICAL

EXIST. GROUND AT PGL
1.74
1.34
MHW = -0.322
MILLING & RESURFACING
2
0
-2
14+60
14+80
15+00
15+20
15+40
15+60
15+80
16+00
16+20
16+40
16+60
16+80
17+00
17+20
17+40

THE OFFICIAL RECORD OF THIS SHEET IS THE ELECTRONIC FILE DIGITALLY SIGNED AND SEALED UNDER RULE 61G15-23.004, F.A.C.

REVISIONS			
DATE	DESCRIPTION	DATE	DESCRIPTION

ANDRES CARDONA, P.E.
P.E. LICENSE NUMBER 63917
WSP USA, 7650 CORPORATE CENTER DRIVE,
SUITE 300, MIAMI, FLORIDA 33126
CERTIFICATE OF AUTHORIZATION 01462

SEA LEVEL RISE ROADWAY AND DRAINAGE PILOT PROJECT (KEY LARGO AND BIG PINE KEY)
MONROE COUNTY - DEPARTMENT OF ENGINEERING

ROADWAY PLAN & PROFILE (FATHER TONY WAY)

SHEET NO.
RD-3B

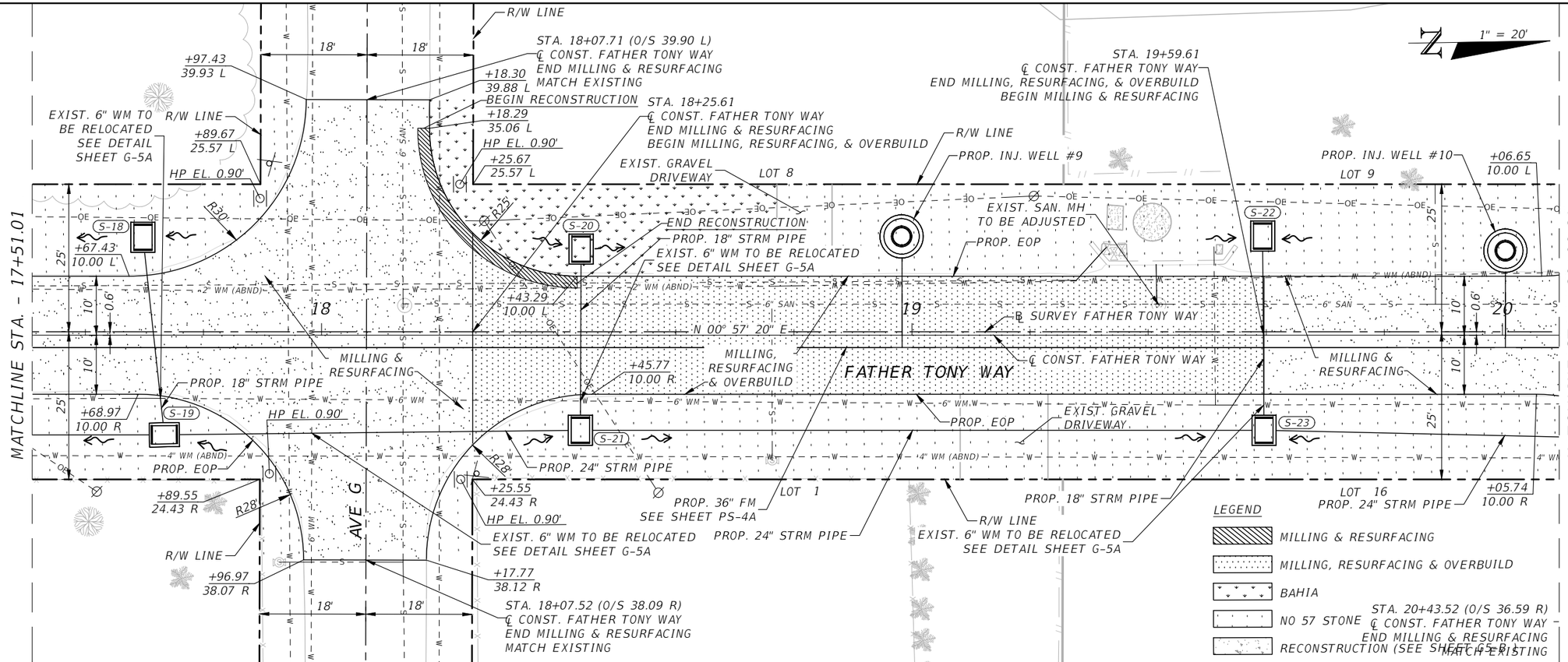

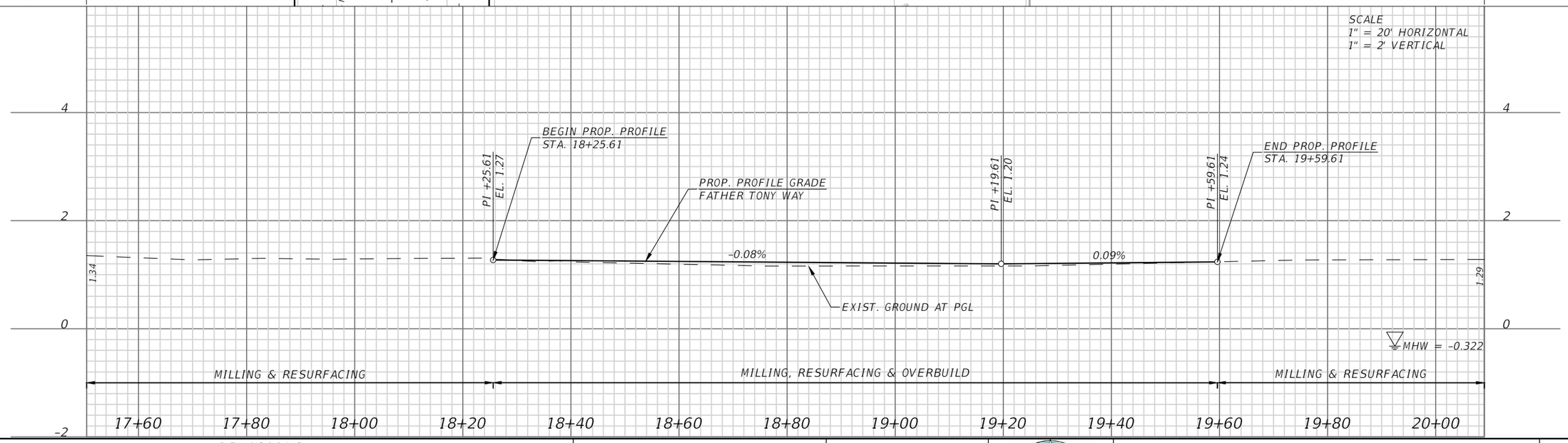

REVISIONS			
DATE	DESCRIPTION	DATE	DESCRIPTION

ANDRES CARDONA, P.E.
P.E. LICENSE NUMBER 63917
WSP USA, 7650 CORPORATE CENTER DRIVE,
SUITE 300, MIAMI, FLORIDA 33126
CERTIFICATE OF AUTHORIZATION 01462

SEA LEVEL RISE ROADWAY AND DRAINAGE PILOT PROJECT (KEY LARGO AND BIG PINE KEY)
MONROE COUNTY - DEPARTMENT OF ENGINEERING

ROADWAY PLAN & PROFILE (FATHER TONY WAY)

SHEET NO. RD-4B

THE OFFICIAL RECORD OF THIS SHEET IS THE ELECTRONIC FILE DIGITALLY SIGNED AND SEALED UNDER RULE 61G15-23.004, F.A.C.

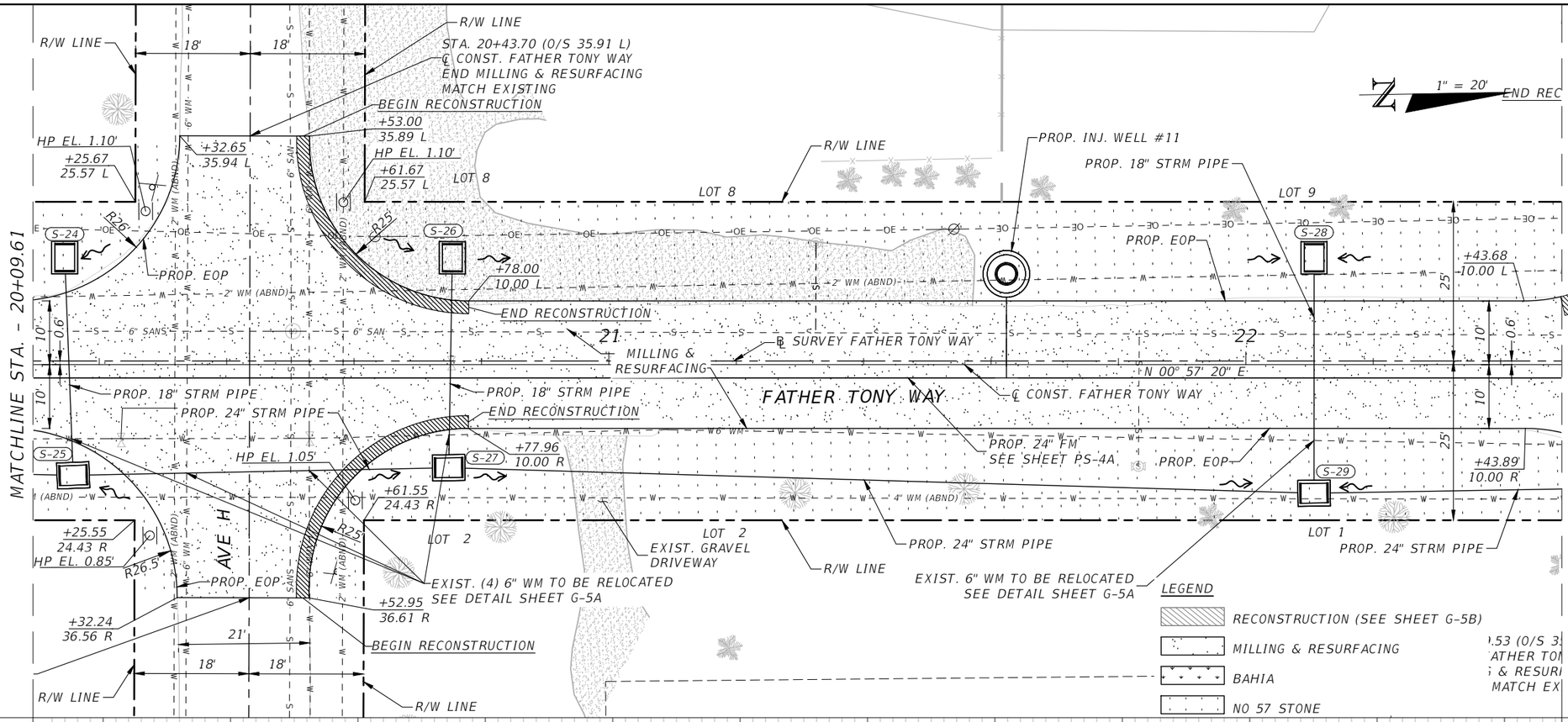

REVISIONS			
DATE	DESCRIPTION	DATE	DESCRIPTION

ANDRES CARDONA, P.E.
P.E. LICENSE NUMBER 63917
WSP USA, 7650 CORPORATE CENTER DRIVE,
SUITE 300, MIAMI, FLORIDA 33126
CERTIFICATE OF AUTHORIZATION 01462

SEA LEVEL RISE ROADWAY AND DRAINAGE PILOT PROJECT (KEY LARGO AND BIG PINE KEY)

MONROE COUNTY - DEPARTMENT OF ENGINEERING

ROADWAY PLAN & PROFILE (FATHER TONY WAY)

SHEET NO.

RD-5B

THE OFFICIAL RECORD OF THIS SHEET IS THE ELECTRONIC FILE DIGITALLY SIGNED AND SEALED UNDER RULE 61G15-23.004, F.A.C.

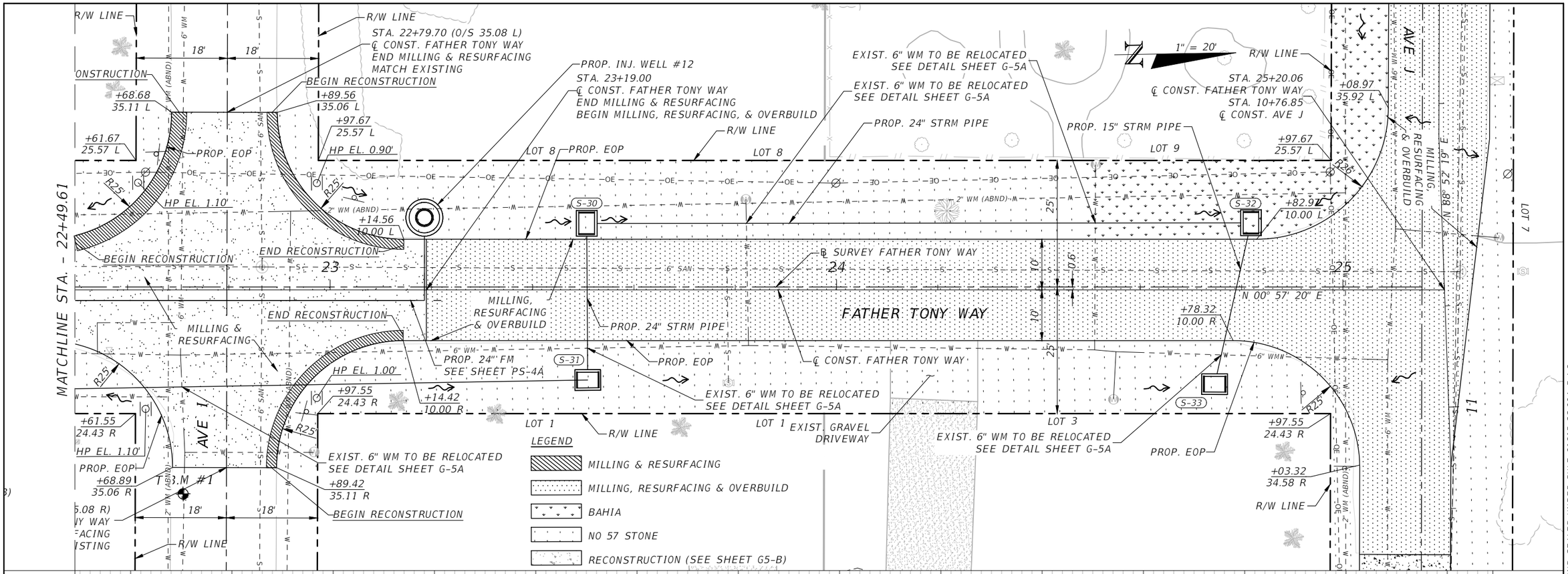

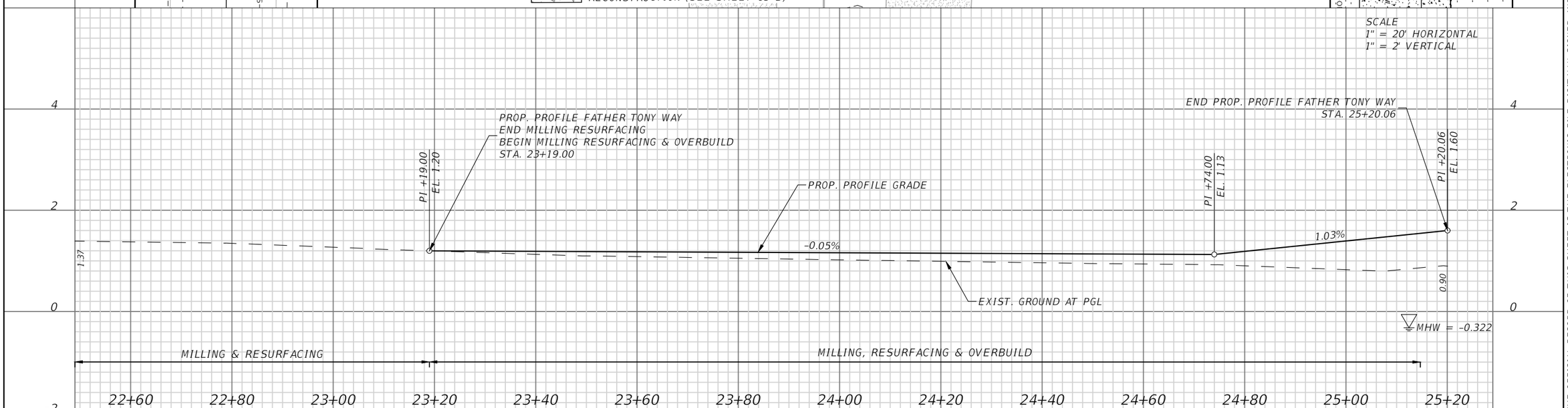

REVISIONS			
DATE	DESCRIPTION	DATE	DESCRIPTION

ANDRES CARDONA, P.E.
P.E. LICENSE NUMBER 63917
WSP USA, 7650 CORPORATE CENTER DRIVE,
SUITE 300, MIAMI, FLORIDA 33126
CERTIFICATE OF AUTHORIZATION 01462

SEA LEVEL RISE ROADWAY AND DRAINAGE PILOT PROJECT (KEY LARGO AND BIG PINE KEY)

MONROE COUNTY - DEPARTMENT OF ENGINEERING

ROADWAY PLAN & PROFILE (FATHER TONY WAY)

SHEET NO. RD-6B

THE OFFICIAL RECORD OF THIS SHEET IS THE ELECTRONIC FILE DIGITALLY SIGNED AND SEALED UNDER RULE 61G15-23.004, F.A.C.

END PROJECT
END RECONSTRUCTION
STA. 12+22.06
℄ CONST. AVE J

1" = 20'

STA. 10+00.41
℄ CONST. AVE J
BEGIN MILLING, RESURFACING & OVERBUILD
MATCH EXISTING

EXIST. SAN. MH
TO BE ADJUSTED

STA. 10+76.85
℄ CONST. AVE J
STA. 25+20.06
℄ CONST. FATHER TONY WAY

STA. 11+29.15
℄ CONST. AVE J
END MILLING, RESURFACING, & OVERBUILD
BEGIN RECONSTRUCTION

PROP. EOP
EL. 1.10'
PI STA. 10+46.45
+47.42
9.97 L
LOT 7
+00.41
10.00 L
T.B.M #62
EL. 1.38'
EL. 1.51'
EL. 1.29'
S 88° 52' 27" E
N 88° 52' 19" E
EL. 1.60'
EL. 1.58'
R/W LINE
11
PI STA. 11+11.49
℄ CONST. AVE J
℄ SURVEY AVE J
PROP. EOP
12
+22.06
0.00 R
18'
10'
℄ CONST. AVE J
T.B.M #61
AVE J
MILLING,
RESURFACING
& OVERBUILD
EL. 1.46'
EL. 1.28'
EL. 1.52'
EL. 1.52'
S 88° 54' 29" E
RECONSTRUCTION
+00.41
10.00 R
PROP. EOP
+40.93
10.00 R
EL. 1.12'
EL. 1.26'
EL. 1.16'
T.B.M. #2
AVE J
+22.06
18.00 R
2" WM (ABND)
EXIST. GRAVEL
DRIVEWAY
HP EL. 0.40'
R/W LINE
EL. 1.00'
R25
R25
N 00° 57' 20" E
EL. 1.03'
+11.97
18.00 R
EL. 1.16'
LOT 3
PROP. EOP
R/W LINE
HP EL. 0.90'
+65.50
36.70 R
EL. 0.92'
S-32
+85.32
42.08 R
EL. 0.93'
PROP. 15" STRM PIPE
EXIST. 6" WM TO BE RELOCATED
SEE DETAIL SHEET G-5A
EL. 0.42'
0.6'
EL. 0.42'
S-33
10'
10'
25'
25'
LOT 9

LEGEND
- RECONSTRUCTION
- MILLING, RESURFACING & OVERBUILD
- BAHIA
- NO 57 STONE

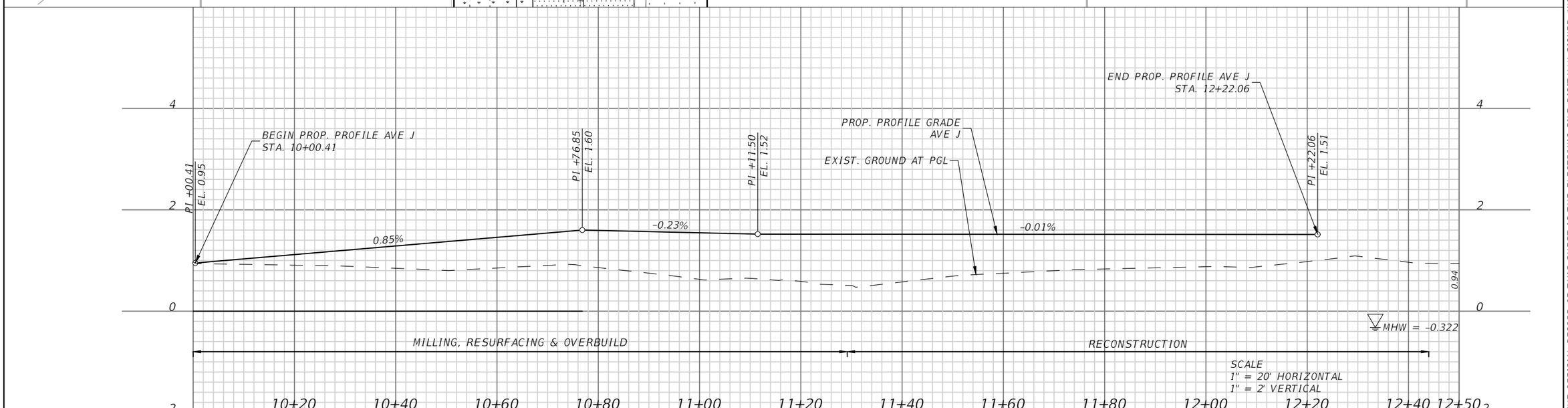

REVISIONS			
DATE	DESCRIPTION	DATE	DESCRIPTION

ANDRES CARDONA, P.E.
P.E. LICENSE NUMBER 63917
WSP USA, 7650 CORPORATE CENTER DRIVE,
SUITE 300, MIAMI, FLORIDA 33126
CERTIFICATE OF AUTHORIZATION 01462

SEA LEVEL RISE ROADWAY AND DRAINAGE PILOT PROJECT (KEY LARGO AND BIG PINE KEY)
MONROE COUNTY - DEPARTMENT OF ENGINEERING

ROADWAY PLAN & PROFILE (AVE J)

SHEET NO.
RD-7B

THE OFFICIAL RECORD OF THIS SHEET IS THE ELECTRONIC FILE DIGITALLY SIGNED AND SEALED UNDER RULE 61G15-23.004, F.A.C.

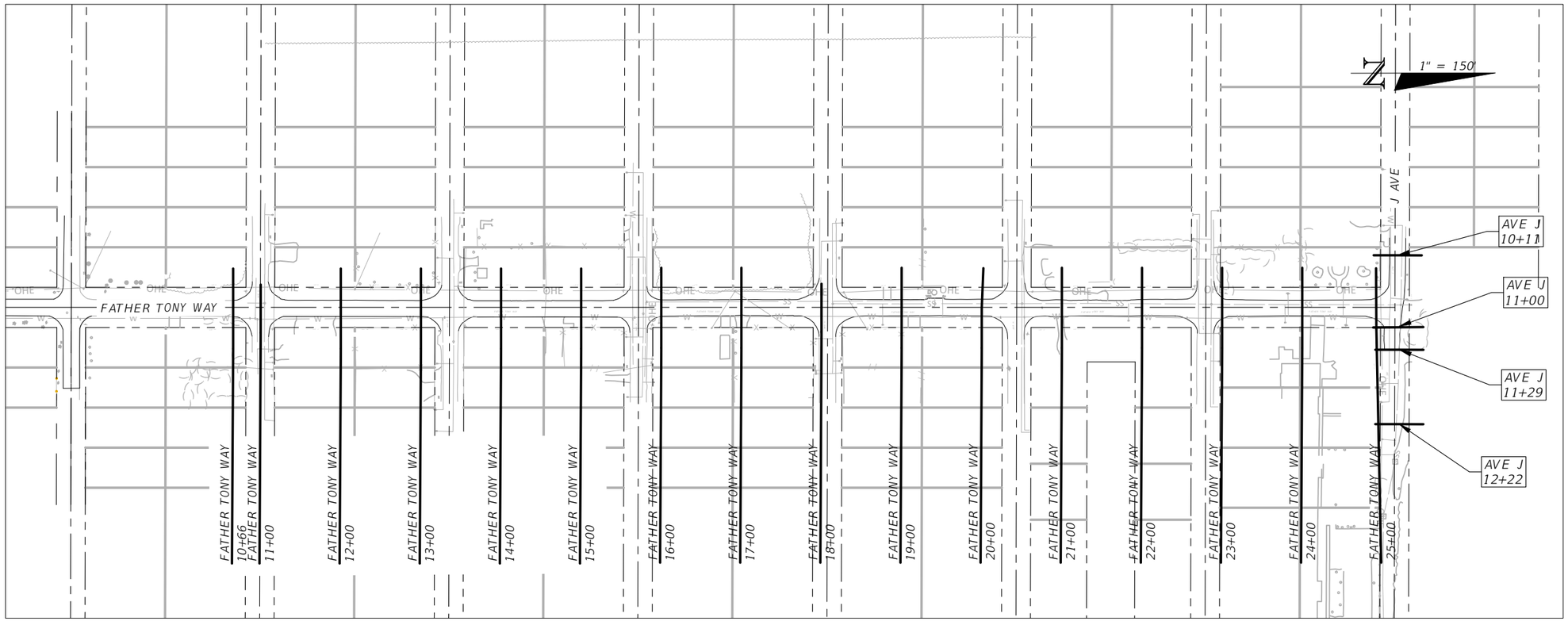

REVISIONS			
DATE	DESCRIPTION	DATE	DESCRIPTION

ANDRES CARDONA, P.E.
P.E. LICENSE NUMBER 63917
WSP USA, 7650 CORPORATE CENTER DRIVE,
SUITE 300, MIAMI, FLORIDA 33126
CERTIFICATE OF AUTHORIZATION 01462

SEA LEVEL RISE ROADWAY AND DRAINAGE PILOT PROJECT (KEY LARGO AND BIG PINE KEY)
MONROE COUNTY - DEPARTMENT OF ENGINEERING

ROADWAY CROSS SECTIONS LAYOUT

SHEET NO.
RD-8B

THE OFFICIAL RECORD OF THIS SHEET IS THE ELECTRONIC FILE DIGITALLY SIGNED AND SEALED UNDER RULE 61G15-23.004, F.A.C.

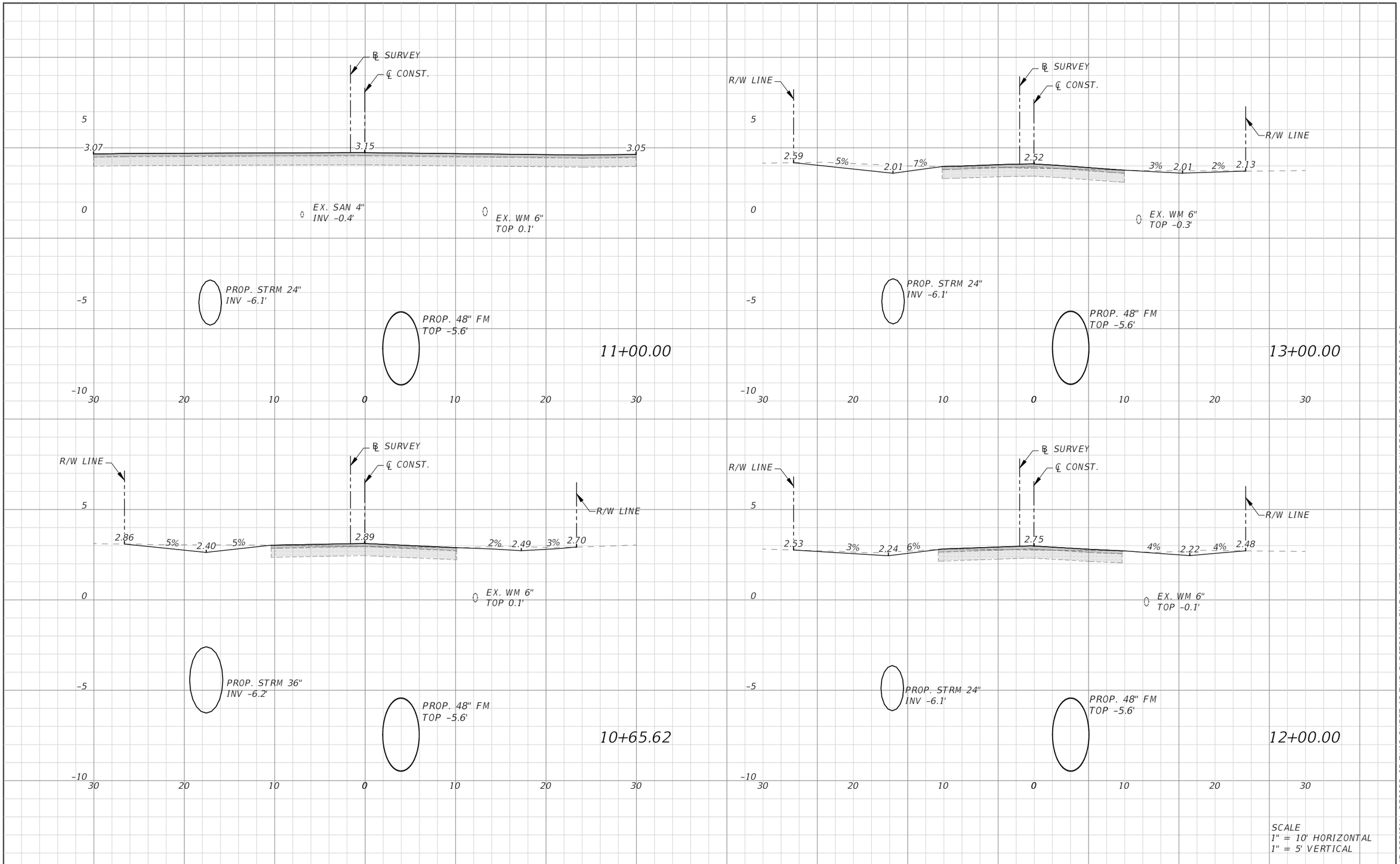

THE OFFICIAL RECORD OF THIS SHEET IS THE ELECTRONIC FILE DIGITALLY SIGNED AND SEALED UNDER RULE 61G15-23.004, F.A.C.

REVISIONS			
DATE	DESCRIPTION	DATE	DESCRIPTION

ANDRES CARDONA, P.E.
P.E. LICENSE NUMBER 63917
WSP USA, 7650 CORPORATE CENTER DRIVE,
SUITE 300, MIAMI, FLORIDA 33126
CERTIFICATE OF AUTHORIZATION 01462

SEA LEVEL RISE ROADWAY AND DRAINAGE PILOT PROJECT (KEY LARGO AND BIG PINE KEY)

MONROE COUNTY - DEPARTMENT OF ENGINEERING

ROADWAY CROSS SECTIONS (FATHER TONY WAY)

SHEET NO. RD-9B

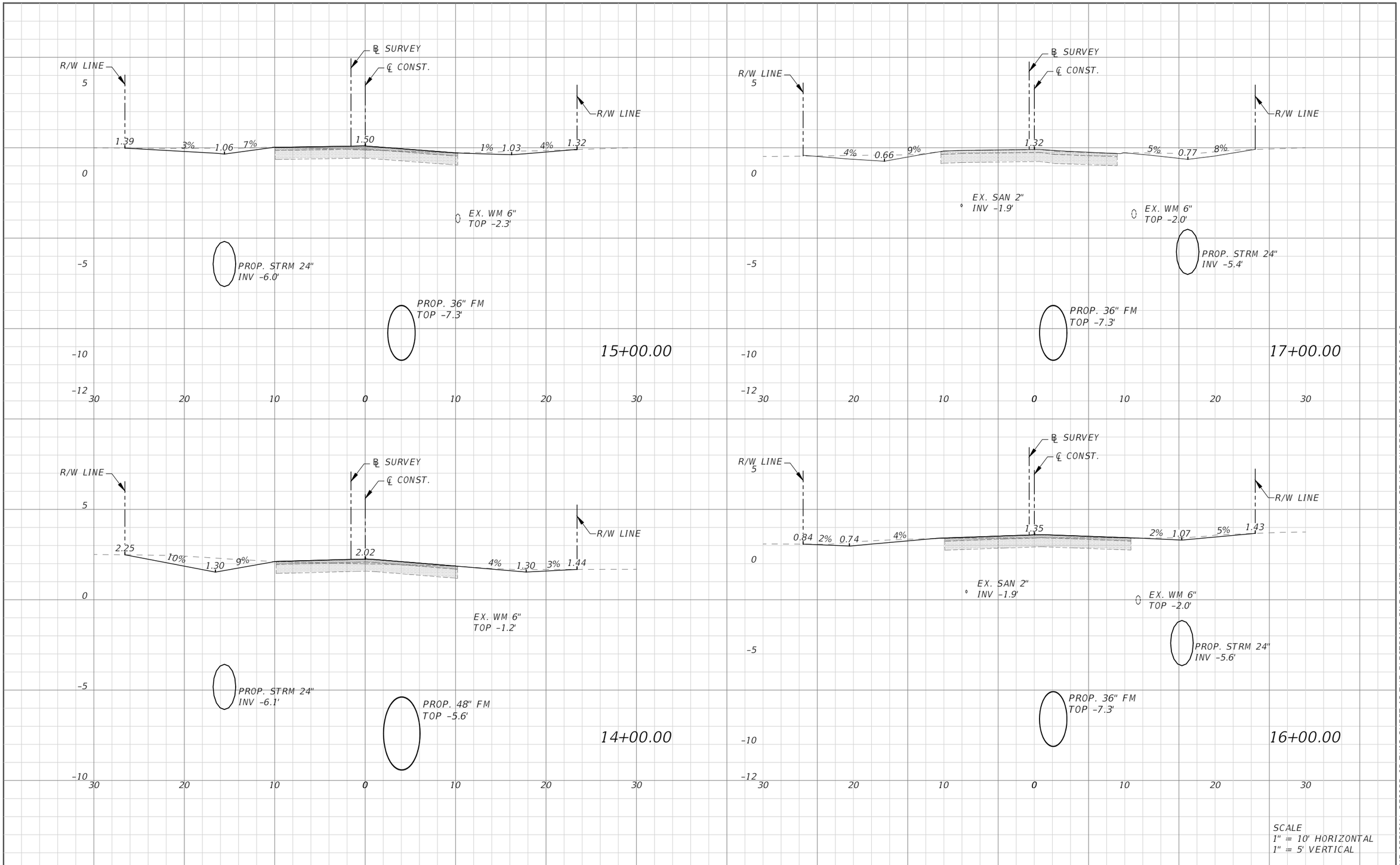

THE OFFICIAL RECORD OF THIS SHEET IS THE ELECTRONIC FILE DIGITALLY SIGNED AND SEALED UNDER RULE 61G15-23.004, F.A.C.

REVISIONS			
DATE	DESCRIPTION	DATE	DESCRIPTION

ANDRES CARDONA, P.E.
P.E. LICENSE NUMBER 63917
WSP USA, 7650 CORPORATE CENTER DRIVE,
SUITE 300, MIAMI, FLORIDA 33126
CERTIFICATE OF AUTHORIZATION 01462

SEA LEVEL RISE ROADWAY AND DRAINAGE PILOT PROJECT (KEY LARGO AND BIG PINE KEY)

MONROE COUNTY - DEPARTMENT OF ENGINEERING

ROADWAY CROSS SECTIONS (FATHER TONY WAY)

SHEET NO. RD-10B

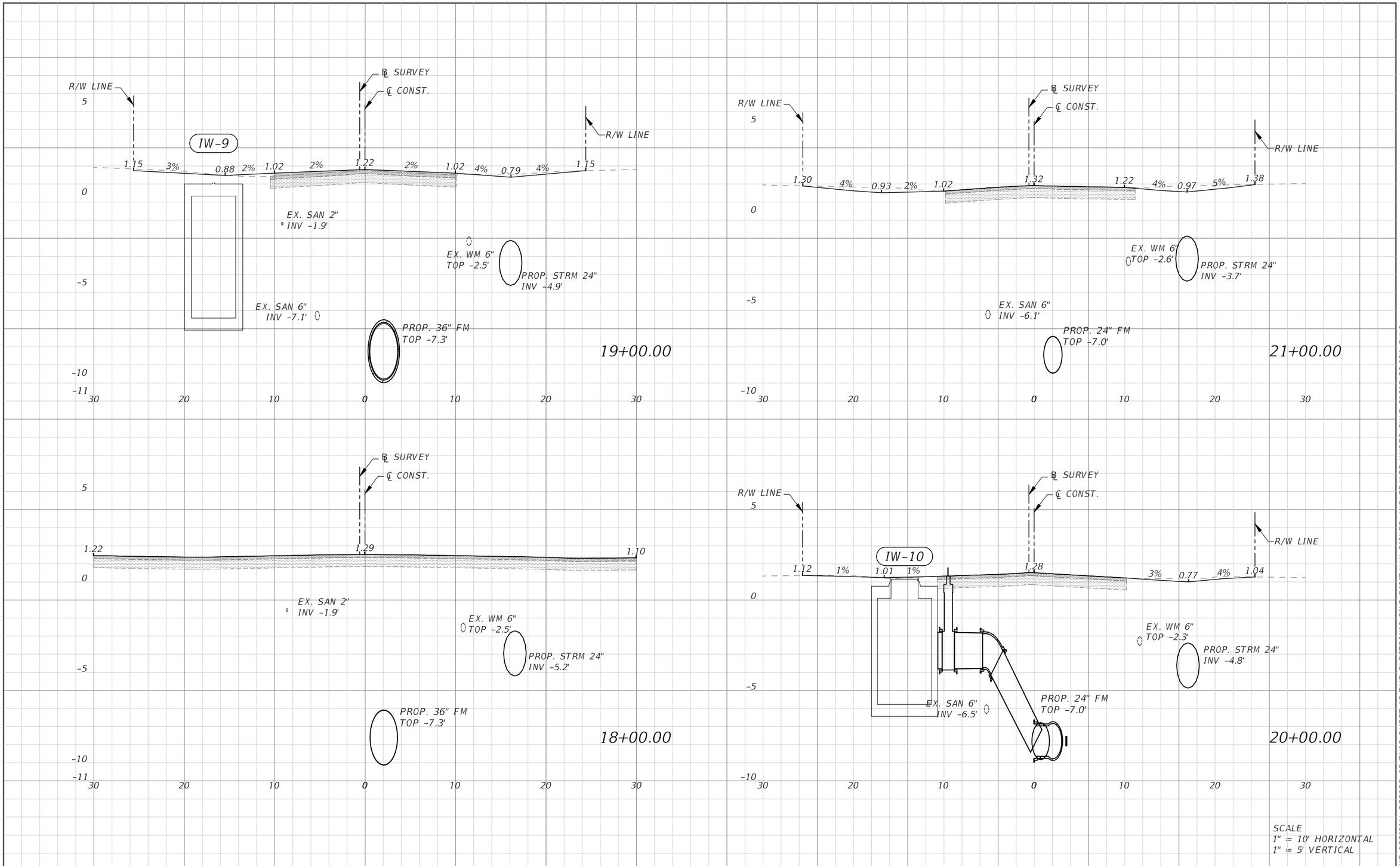

SCALE
1" = 10' HORIZONTAL
1" = 5' VERTICAL

THE OFFICIAL RECORD OF THIS SHEET IS THE ELECTRONIC FILE DIGITALLY SIGNED AND SEALED UNDER RULE 61G15-23.004, F.A.C.

REVISIONS			
DATE	DESCRIPTION	DATE	DESCRIPTION

ANDRES CARDONA, P.E.
P.E. LICENSE NUMBER 63917
WSP USA, 7650 CORPORATE CENTER DRIVE,
SUITE 300, MIAMI, FLORIDA 33126
CERTIFICATE OF AUTHORIZATION 01462

SEA LEVEL RISE ROADWAY AND DRAINAGE PILOT PROJECT (KEY LARGO AND BIG PINE KEY)
MONROE COUNTY - DEPARTMENT OF ENGINEERING

ROADWAY CROSS SECTIONS (FATHER TONY WAY)

SHEET NO.
RD-11B

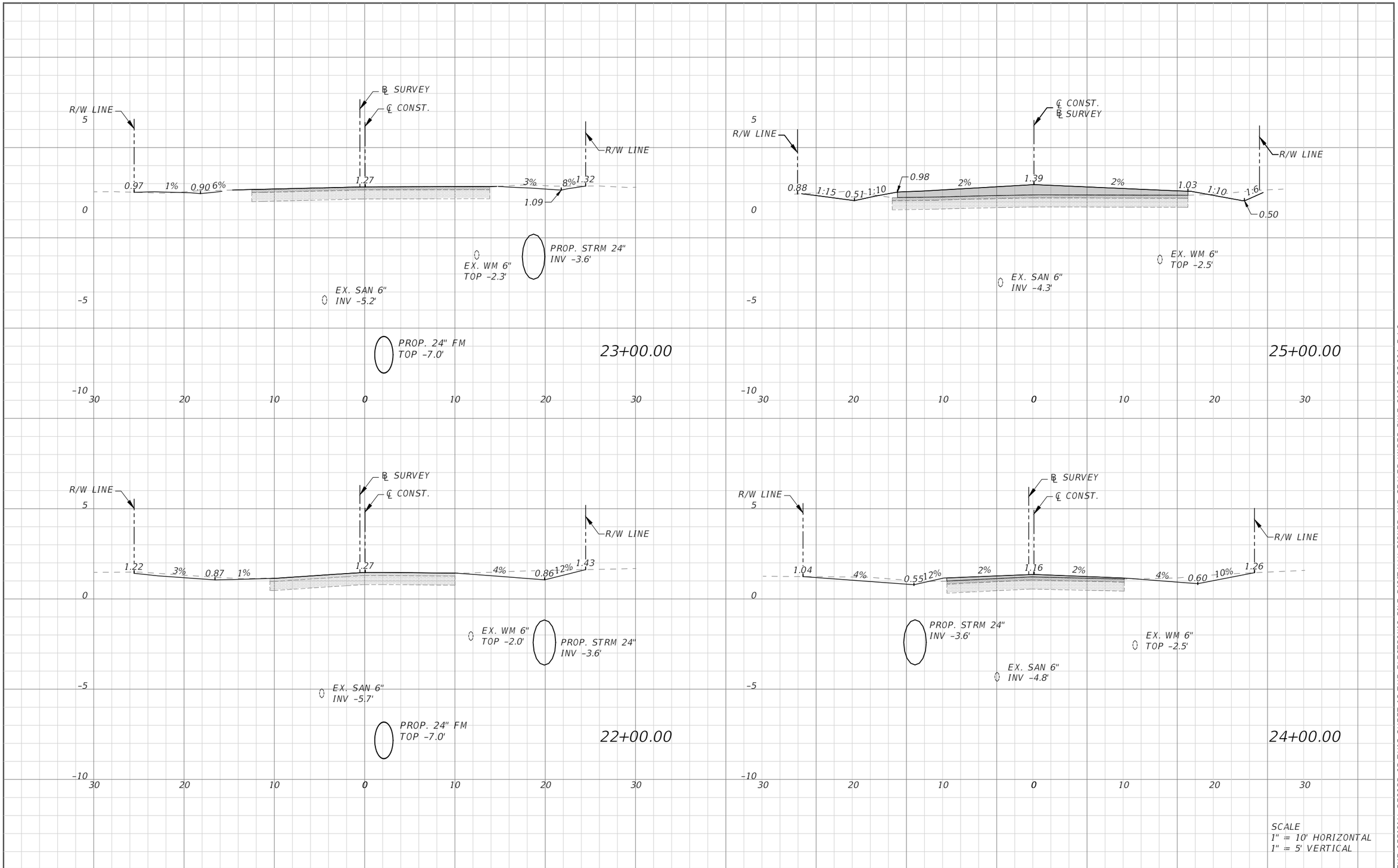

SCALE
1" = 10' HORIZONTAL
1" = 5' VERTICAL

THE OFFICIAL RECORD OF THIS SHEET IS THE ELECTRONIC FILE DIGITALLY SIGNED AND SEALED UNDER RULE 61G15-23.004, F.A.C.

REVISIONS			
DATE	DESCRIPTION	DATE	DESCRIPTION

ANDRES CARDONA, P.E.
P.E. LICENSE NUMBER 63917
WSP USA, 7650 CORPORATE CENTER DRIVE,
SUITE 300, MIAMI, FLORIDA 33126
CERTIFICATE OF AUTHORIZATION 01462

SEA LEVEL RISE ROADWAY AND DRAINAGE PILOT PROJECT (KEY LARGO AND BIG PINE KEY)
MONROE COUNTY - DEPARTMENT OF ENGINEERING

ROADWAY CROSS SECTIONS (FATHER TONY WAY)

SHEET NO.
RD-12B

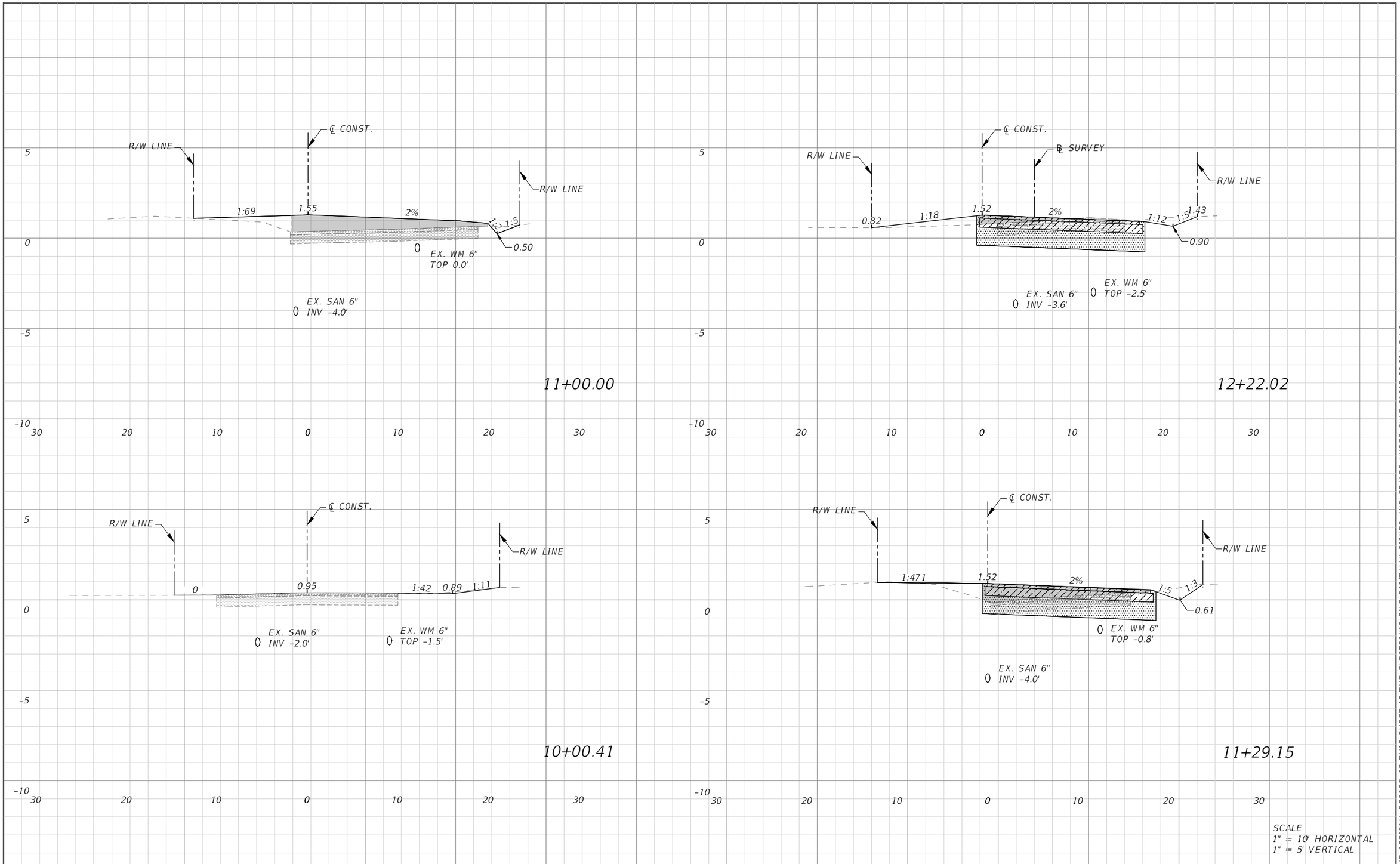

SCALE
1" = 10' HORIZONTAL
1" = 5' VERTICAL

THE OFFICIAL RECORD OF THIS SHEET IS THE ELECTRONIC FILE DIGITALLY SIGNED AND SEALED UNDER RULE 61G15-23.004, F.A.C.

REVISIONS			
DATE	DESCRIPTION	DATE	DESCRIPTION

ANDRES CARDONA, P.E.
P.E. LICENSE NUMBER 63917
WSP USA, 7650 CORPORATE CENTER DRIVE,
SUITE 300, MIAMI, FLORIDA 33126
CERTIFICATE OF AUTHORIZATION 01462

SEA LEVEL RISE ROADWAY AND DRAINAGE PILOT PROJECT (KEY LARGO AND BIG PINE KEY)
MONROE COUNTY - DEPARTMENT OF ENGINEERING

ROADWAY CROSS SECTIONS (AVE J)

SHEET NO.
RD-13B

TEMPORARY TRAFFIC CONTROL (TTC) GENERAL NOTES

1. ALL TTC SHALL BE IN CONFORMANCE WITH THE FLORIDA DEPARTMENT OF TRANSPORTATION STANDARD PLANS 2019-20 INDEX (102-600), MONROE COUNTY ENGINEERING DEPARTMENT STANDARDS AND MANUAL OF UNIFORM TRAFFIC CONTROL DEVICES STANDARDS (MUTCD) LATEST EDITION.
2. CONTRACTOR SHALL NOTIFY THE MONROE COUNTY PROJECT MANAGER A MINIMUM OF 5 WORKING DAYS PRIOR TO IMPLEMENTATION OF THE TTC.
3. PRIOR TO COMMENCING WORK, THE CONTRACTOR SHALL FURNISH, ERECT AND MAINTAIN ALL BARRICADES, WARNING SIGNS AND MARKINGS FOR HAZARDS AND THE CONTROL OF TRAFFIC, IN REASONABLE CONFORMITY WITH THE MUTCD , OR AS DIRECTED BY THE OWNER SUCH AS TO EFFECTIVELY PREVENT ACCIDENTS IN ALL PLACES WHERE THE WORK CAUSES OBSTRUCTION TO THE NORMAL TRAFFIC OR CONSTITUTES IN ANY WAY A HAZARD TO THE PUBLIC.
4. THE CONTRACTOR SHALL PROVIDE THE COUNTY WITH THE NAME OF THE PERSON ON THE CONTRACTOR'S STAFF DESIGNATED TO BE RESPONSIBLE FOR THE IMPLEMENTATION OF ALL PHASES OF TTC, PRIOR TO THE BEGINNING OF CONSTRUCTION.
5. ALL EXISTING PAVEMENT MARKINGS OUTSIDE THE LIMITS OF CONSTRUCTION WHICH ARE REMOVED FOR TTC PURPOSES SHALL BE REPLACED BEFORE COMPLETION OF THE PROJECT.
6. THE REFLECTIVE SHEETING ON SIGNS, CONES OR BARRICADES SCRATCHED OR DAMAGED TO THE POINT THAT REFLECTIVITY IS IMPAIRED SHALL BE REPLACED. DAMAGED, DEFACED OR DIRTY SIGNS, CONES OR BARRICADES SHALL IMMEDIATELY BE REPAIRED, REPLACED OR CLEANED BY THE CONTRACTOR.
7. THE CONTRACTOR SHALL BE RESPONSIBLE FOR PERFORMING FORMAL TTC INSPECTIONS AND SHALL IMMEDIATELY REPLACE ALL EQUIPMENT AND DEVICES NOT CONFORMING TO FDOT AND COUNTY STANDARDS. THESE INSPECTIONS SHALL TAKE PLACE AT LEAST ONCE A WEEK. SOME OF THESE INSPECTIONS SHALL BE CONDUCTED AT NIGHT. THE COUNTY SHALL BE ADVISED OF THE SCHEDULE OF THE INSPECTIONS AND BE GIVEN THE OPPORTUNITY TO JOIN IN THE INSPECTION.
8. SHORT TERM STOPPING OR PARKING OF A VEHICLE, OR PLACING ANYTHING ELSE NEXT TO THE WORK AREA (FOR EXAMPLE, A STACK OF CONES, PARKED CONSTRUCTION EQUIPMENT/VEHICLES, ETC.) CREATES A CHANNEL EFFECT WHICH CAN ADVERSELY AFFECT TRAFFIC FLOW. THEREFORE, ALL CONSTRUCTION EQUIPMENT SHALL BE PLACED A MINIMUM OF 15 FEET FROM THE TRAVEL LANE WHEN NOT IN USE. OVERNIGHT STORAGE WILL BE IN APPROPRIATELY SIGNED AND BARRICADED AREA AND PLACED OUTSIDE OF CLEAR ZONE.
9. TRAFFIC CONDITIONS, ACCIDENTS AND OTHER EMERGENCY CONDITIONS MAY REQUIRE THE COUNTY TO MODIFY ANY CHANNELIZATION SHOWN IN THESE PLANS. THE CONTRACTOR SHALL MAKE THE NECESSARY ADJUSTMENTS, AS DIRECTED BY THE COUNTY, WITHOUT DELAY.
10. WARNING LIGHTS SHALL BE USED TO MARK BARRICADES AS NEEDED.
11. THE CONTRACTOR SHALL RETURN THE GROUND TO ITS ORIGINAL CONDITION OR PROPOSED FINAL GRADE, WHEN REMOVING ANY TEMPORARY SURFACE.
12. DUST CONTROL MEASURES SHALL BE IMPLEMENTED ON ALL UNPAVED SURFACES UNTIL PAVED.
13. TEMPORARY PAVEMENT SHALL CONSIST OF 1" OF TYPE S-II ASPHALT ON 6" OF LIMEROCK.
14. THE CONTRACTOR HAS THE OPTION TO SUBMIT ALTERNATIVE TTC PLANS FOR APPROVAL BY THE COUNTY. ALTERNATE TTC PLANS SHALL BE SIGNED AND SEALED BY A PROFESSIONAL ENGINEER REGISTERED IN THE STATE OF FLORIDA AND SHALL BE CONSISTENT WITH STANDARD TTC DESIGN PRACTICES. NO CONSTRUCTION ACTIVITY WILL BE ALLOWED UNTIL THE CONTRACTOR'S TTC PLANS ARE APPROVED IN WRITING.

SIGNING NOTES

1. THE CONTRACTOR SHALL INSURE THAT PERMANENT SIGNS DO NOT CONFLICT WITH TTC SIGNS. THE CONTRACTOR SHALL COVER ALL SIGNS, BOTH PERMANENT AND TEMPORARY, THAT CONFLICT WITH TRAFFIC CONTROL DURING CONSTRUCTION OPERATIONS.
2. THE EXISTING POSTED SPEED LIMIT SIGNS SHALL REMAIN THROUGHOUT ALL CONSTRUCTION STAGES, UNLESS OTHERWISE NOTED.
3. ANY EXISTING STREET AND ROAD NAME SIGNS THAT ARE IMPACTED BY CONSTRUCTION ARE TO BE TEMPORARILY RELOCATED AND KEPT VISIBLE AT ALL TIMES FOR THE FACILITATION OF ACCESS BY EMERGENCY VEHICLE TRAFFIC.
4. CONTRACTOR MUST MAINTAIN EXISTING SIGNING DURING CONSTRUCTION. IF SIGNS ARE DAMAGED DUE TO HIS ACTIVITY, THE CONTRACTOR IS REQUIRED TO REPLACE THEM PROMPTLY IN ACCORDANCE WITH CURRENT COUNTY OR FDOT STANDARD SPECIFICATIONS AT NO ADDITIONAL COST TO THE OWNER.
5. PROVIDE ADVANCE WARNING SIGNS PER FDOT INDEX 102-603, 102-604, 102-605, AND 102-612 AS APPLICABLE. FIELD LOCATE SINGING TO AVOID CONFLICTS WITH EXISTING SIGNS AND OTHER ROADSIDE OBSTRUCTIONS.
6. GROOVED PAVEMENT AHEAD SIGN IS REQUIRED 500 FEET IN ADVANCE OF A MILLED OR GROOVED SURFACE OPEN TO TRAFFIC. THE W8-15P PLACARD SHALL BE USED IN CONJUNCTION WITH THE GROOVED PAVEMENT AHEAD SIGN.

WORK ZONE SPECIAL NOTES

1. PAVEMENT MUST BE RESTORED TO AN ASPHALT BASE COURSE AS A MINIMUM BEFORE REOPENING ANY WORK ZONE TO TRAFFIC. REFER ALSO TO TTC GENERAL NOTE 13.
2. PROVIDE UNOBSTRUCTED ACCESS TO ALL DRIVEWAYS AND SIDE STREETS ADJACENT TO THE WORK ZONE AT ALL TIMES. TEMPORARY USE OF STEEL PLATES TO COVER EXCAVATION IS PERMITTED.
3. FOR WORK WITHIN THE TRAVELED WAY, REFER TO STANDARD PLAN INDEX 102-603 FOR TRAFFIC CONTROL. MAINTAIN A MINIMUM OF ONE 9-FOOT LANE DURING WORKING HOURS ALONG THE WORK ZONE.
4. FOR WORK WITHIN AND NEAR INTERSECTIONS, REFER TO STANDARD PLAN INDEX 102-604 AND 102-605. ALL INTERSECTION MOVEMENTS SHALL BE PROVIDED AT ALL TIMES.
5. FOR WORK ON THE SHOULDER AND ROADSIDE, REFER TO STANDARD PLAN INDEX 102-612.
6. SHORT DURATION INTERMITTENT ROADWAY CLOSURES TO INSTALL DRAINAGE CROSSINGS SHALL BE PERMITTED. CLOSURE TIME SHALL BE MINIMAL AND SHALL INCLUDE THE TIME NEEDED TO MAKE THE WORK ZONE SUITABLE FOR TRAFFIC QUEUE CLEARING. REFER TO STANDARD PLAN INDEX 102-625.
7. ALL DROP OFFS ALONG CONSTRUCTION WORK ZONES SHALL BE HANDLED PER STANDARD PLAN INDEX 102-600. NO VERTICAL DROP-OFFS GREATER THAN 1.5 INCHES SHALL BE LEFT EXPOSED AND UNMITIGATED DURING NON-WORKING HOURS. CHANNELIZING DEVICES SHALL REMAIN IN PLACE AT ALL TIMES TO DELINEATE MITIGATED VERTICAL DROP-OFFS GREATER THAN 3 INCHES ALONG THE WORK ZONE.
8. INSTALL APRONS PER STANDARDPLAN INDEX 102-600 TO MITIGATE FOR UNEVEN SURFACES ALONG THE TRAVELED WAY DURING NON-WORKING HOURS.
9. ADDITIONAL FLAGGERS MAY BE REQUIRED TO ENSURE DRIVEWAY ACCESSIBILITY DURING MILLING AND PAVING OPERATIONS.
10. PEDESTRIANS SHALL BE ESCORTED BY FLAGGERS THROUGH THE WORK ZONE.
11. TRENCHING, SHORING, AND BACKFILLING FOR DRAINAGE INSTALLATION SHALL BE PER MONROE COUNTY STANDARD SPECIFICATION SECTION 80.
12. CONTRACTOR SHALL IDENTIFY STAGING AREAS ALONG THE PROJECT SITE AND SUBMIT FOR APPROVAL TO THE COUNTY PROJECT MANAGER AND EOR PRIOR TO MOBILIZATION OF EACH PHASE OF THE PROJECT.
13. ANY ROAD CLOSURES TO BE COORDINATED WITH THE COUNTY.

REQUIREMENTS

1. PROJECT WORK HOURS ARE BETWEEN 7:00 AM AND 7:00 PM MONDAY THROUGH FRIDAY. NO WORK IS ALLOWED ON WEEKENDS OR LEGAL HOLIDAYS, UNLESS AUTHORIZED BY THE COUNTY, WITH A WRITTEN REQUEST, SUBMITTED BY THE CONTRACTOR 72 HOURS PRIOR TO COMMENCEMENT OF WORK.
2. ACCESS FOR LOCAL TRAFFIC WITH DESTINATIONS WITHIN THE WORK ZONES SHALL BE MAINTAINED.
3. ALL ROAD CLOSED SIGNS SHALL BE MOUNTED ON TYPE III BARRICADES.
4. RESTORE ALL SWALES DRIVEWAYS AND SIDEWALKS IMPACTED BY CONSTRUCTION TO THEIR ORIGINAL CONDITION OR BETTER.
5. DURING NON-WORKING HOURS, ROADWAY SHALL BE RESTORED TO MINIMUM TWO LANE TWO-WAY ROADWAY. LENGTH OF ACTIVE WORK ZONE SHALL CONSIDER THE ABILITY TO RESTORE THE EXISTING LANE CONFIGURATION AT THE END OF EACH WORK PERIOD.
6. PROVISION SHALL BE MADE BY CONTRACTOR FOR REMOVAL OF EXISTING STORMWATER SYSTEM.

THE OFFICIAL RECORD OF THIS SHEET IS THE ELECTRONIC FILE DIGITALLY SIGNED AND SEALED UNDER RULE 61G15-23.004, F.A.C.

REVISIONS			
DATE	DESCRIPTION	DATE	DESCRIPTION

ANDRES CARDONA, P.E.
P.E. LICENSE NUMBER 63917
WSP USA, 7650 CORPORATE CENTER DRIVE,
SUITE 300, MIAMI, FLORIDA 33126
CERTIFICATE OF AUTHORIZATION 01462

SEA LEVEL RISE ROADWAY AND DRAINAGE PILOT PROJECT (KEY LARGO AND BIG PINE KEY)
MONROE COUNTY - DEPARTMENT OF ENGINEERING

TEMPORARY TRAFFIC CONTROL - GENERAL NOTES

SHEET NO. TC-1B

PRE-STAGE 1

PRE-STAGE 1 CONSTRUCTION STAGING NOTES

1. ESTABLISH WORK ZONE TO CONSTRUCT TEMPORARY PAVEMENT WIDENING ON ONE SIDE OF THE ROAD
2. INSTALL EROSION CONTROL MEASURES
3. SETUP TRAFFIC CONTROL PER FDOT STANDARD INDEX 102-603 FOR 25 MPH POSTED SPEED
4. CONSTRUCT TEMPORARY PAVEMENT

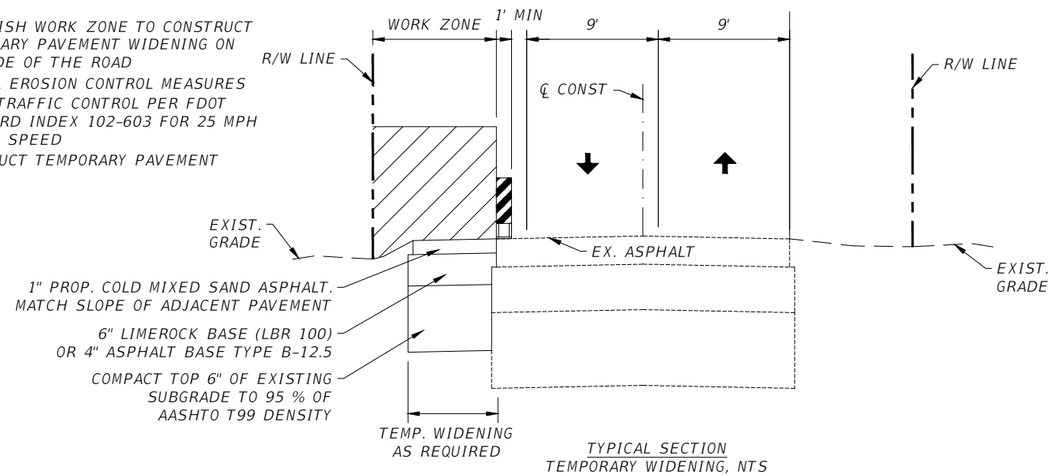

TYPICAL SECTION
TEMPORARY WIDENING, NTS

FATHER TONY WAY STA. 10+66 - 25+20
AVE J STA. 10+00 - 11+29

STAGE 1A

STAGE 1A CONSTRUCTION STAGING NOTES

1. ESTABLISH WORK ZONE ON ONE SIDE OF THE ROADWAY
2. INSTALL EROSION CONTROL MEASURES
3. SETUP TRAFFIC CONTROL PER FDOT STANDARD INDEX 102-603 FOR 25 MPH POSTED SPEED
4. CONSTRUCT DRAINAGE SYSTEM
5. MILL AND RESURFACE MINIMUM WIDTH OF 12 FEET OF ROADWAY
6. REOPEN TO TRAFFIC

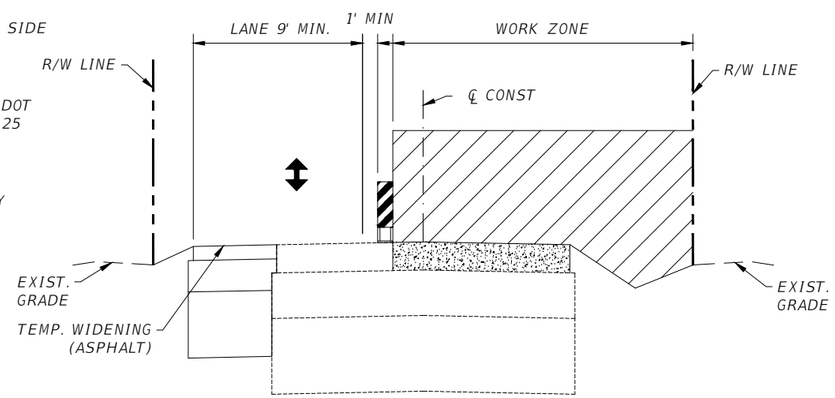

TYPICAL SECTION
MILLING, RESURFACING & OVERBUILD, NTS

FATHER TONY WAY STA. 10+66 - 25+20
AVE J STA. 10+00 - 11+29

STAGE 1B

STAGE 1B CONSTRUCTION STAGING NOTES

1. ESTABLISH WORK ZONE ON THE OTHER SIDE OF THE ROADWAY
2. SETUP TRAFFIC CONTROL PER FDOT STANDARD INDEX 102-603 FOR 25 MPH POSTED SPEED
3. MILL AND RESURFACE THE REMINDER OF THE PROPOSED ROADWAY
4. CONSTRUCT DRAINAGE SYSTEM
5. REOPEN TO TRAFFIC

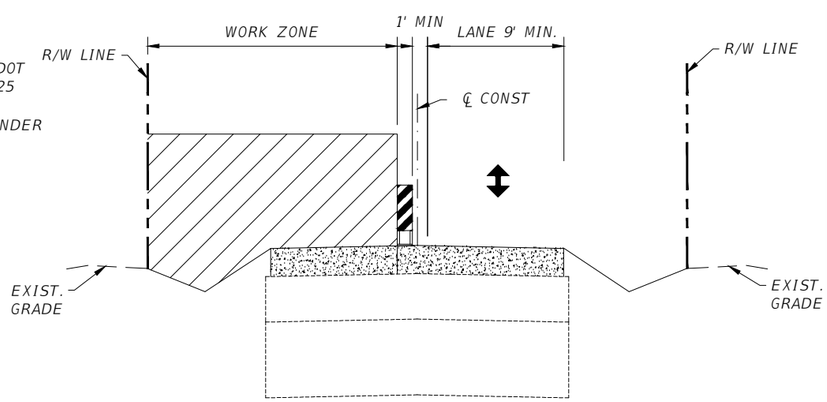

TYPICAL SECTION
MILLING, RESURFACING & OVERBUILD, NTS

FATHER TONY WAY STA. 10+66 - 25+20
AVE J STA. 10+00 - 11+29

THE OFFICIAL RECORD OF THIS SHEET IS THE ELECTRONIC FILE DIGITALLY SIGNED AND SEALED UNDER RULE 61G15-23.004, F.A.C.

REVISIONS			
DATE	DESCRIPTION	DATE	DESCRIPTION

ANDRES CARDONA, P.E.
P.E. LICENSE NUMBER 63917
WSP USA, 7650 CORPORATE CENTER DRIVE, SUITE 300, MIAMI, FLORIDA 33126
CERTIFICATE OF AUTHORIZATION 01462

SEA LEVEL RISE ROADWAY AND DRAINAGE PILOT PROJECT (KEY LARGO AND BIG PINE KEY)
MONROE COUNTY - DEPARTMENT OF ENGINEERING

TEMPORARY TRAFFIC CONTROL - CONSTRUCTION STAGING NOTES

SHEET NO. TC-2B

PRE-STAGE 2

PRE-STAGE 2 CONSTRUCTION STAGING NOTES

1. ESTABLISH WORK ZONE TO PREPARE ROADSIDE FOR STAGE 2A MOT. ON ONE SIDE OF THE ROAD
2. INSTALL EROSION CONTROL MEASURES
3. SETUP TRAFFIC CONTROL PER FDOT STANDARD INDEX 102-603 FOR 25 MPH POSTED SPEED
4. CLEAR OBSTRUCTIONS and PREPARE ROADSIDE FOR STAGE 2A MOT.

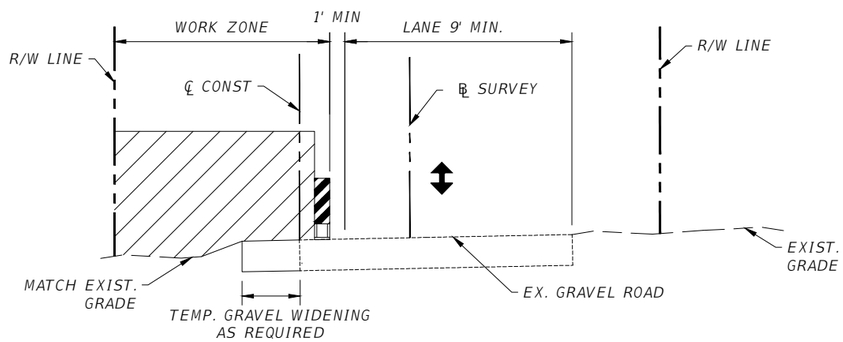

TYPICAL SECTION - AVE J
TEMPORARY WIDENING, NTS

STA. 11+29 TO STA. 12+22

STAGE 2A

STAGE 2A CONSTRUCTION STAGING NOTES

1. ESTABLISH WORK ZONE ON ONE SIDE OF THE ROADWAY
2. INSTALL EROSION CONTROL MEASURES
3. SETUP TRAFFIC CONTROL PER FDOT STANDARD INDEX 102-603 FOR 25 MPH POSTED SPEED
4. RECONSTRUCT A MINIMUM WIDTH OF 12 FEET OF ROADWAY
5. REOPEN TO TRAFFIC

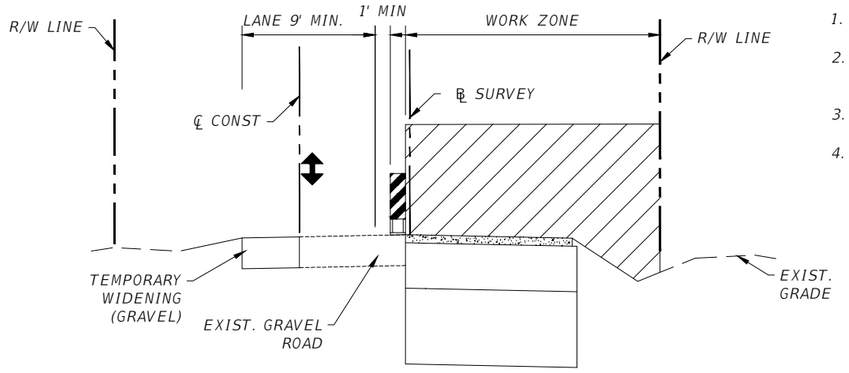

TYPICAL SECTION - AVE J
RECONSTRUCTION, NTS

STA. 11+29 TO STA. 12+22

STAGE 2B

STAGE 2B CONSTRUCTION STAGING NOTES

1. ESTABLISH WORK ZONE ON THE OTHER SIDE OF THE ROADWAY
2. SETUP TRAFFIC CONTROL PER FDOT STANDARD INDEX 102-603 FOR 25 MPH POSTED SPEED
3. RECONSTRUCT THE REMINDER OF THE PROPOSED ROADWAY
4. REOPEN TO TRAFFIC

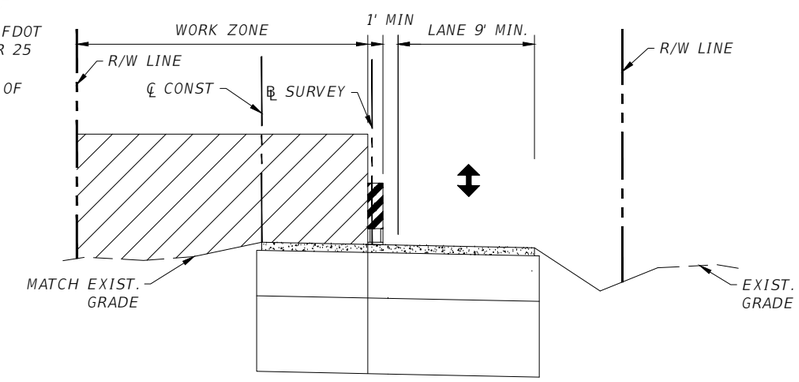

TYPICAL SECTION - AVE J
RECONSTRUCTION, NTS

STA. 11+29 TO STA. 12+22

THE OFFICIAL RECORD OF THIS SHEET IS THE ELECTRONIC FILE DIGITALLY SIGNED AND SEALED UNDER RULE 61G15-23.004, F.A.C.

REVISIONS			
DATE	DESCRIPTION	DATE	DESCRIPTION

ANDRES CARDONA, P.E.
P.E. LICENSE NUMBER 63917
WSP USA, 7650 CORPORATE CENTER DRIVE,
SUITE 300, MIAMI, FLORIDA 33126
CERTIFICATE OF AUTHORIZATION 01462

SEA LEVEL RISE ROADWAY AND DRAINAGE PILOT PROJECT (KEY LARGO AND BIG PINE KEY)
MONROE COUNTY - DEPARTMENT OF ENGINEERING

TEMPORARY TRAFFIC CONTROL - CONSTRUCTION STAGING NOTES

SHEET NO. TC-3B

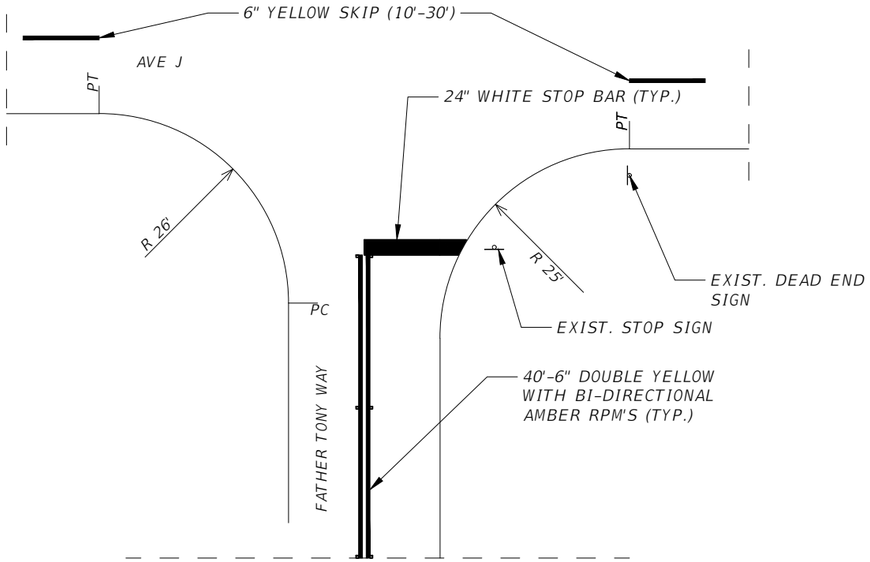

STREET / STOP SIGN DETAIL
AT FATHER TONY DR AND AVE J.
N.T.S

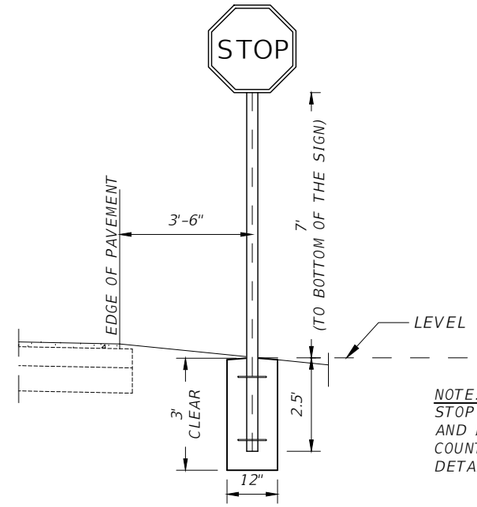

NOTE:
STOP SIGN ASSEMBLY SHALL BE FABRICATED AND INSTALLED IN ACCORDANCE WITH MONROE COUNTY PUBLIC WORKS DEPARTMENT STANDARD DETAILS AND SPECIFICATIONS.

SIGN ADJACENT TO
PAVEMENT WITHOUT CURB
N.T.S

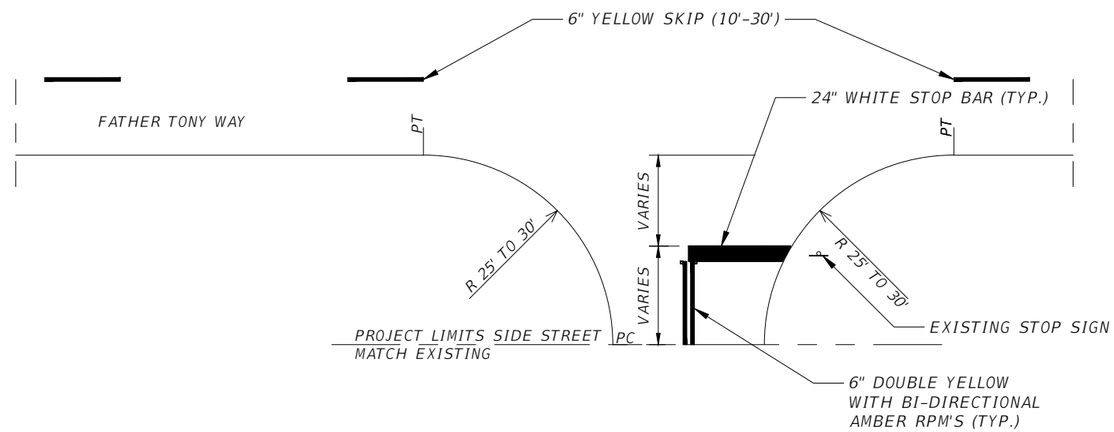

STREET / STOP SIGN DETAIL
ALONG FATHER TONY DR
N.T.S

THE OFFICIAL RECORD OF THIS SHEET IS THE ELECTRONIC FILE DIGITALLY SIGNED AND SEALED UNDER RULE 61G15-23.004, F.A.C.

REVISIONS			
DATE	DESCRIPTION	DATE	DESCRIPTION

ANDRES CARDONA, P.E.
P.E. LICENSE NUMBER 63917
WSP USA, 7650 CORPORATE CENTER DRIVE, SUITE 300, MIAMI, FLORIDA 33126
CERTIFICATE OF AUTHORIZATION 01462

SEA LEVEL RISE ROADWAY AND DRAINAGE PILOT PROJECT (KEY LARGO AND BIG PINE KEY)
MONROE COUNTY - DEPARTMENT OF ENGINEERING

SIGNING PAVEMENT MARKING DETAILS

SHEET NO.
SP-1B

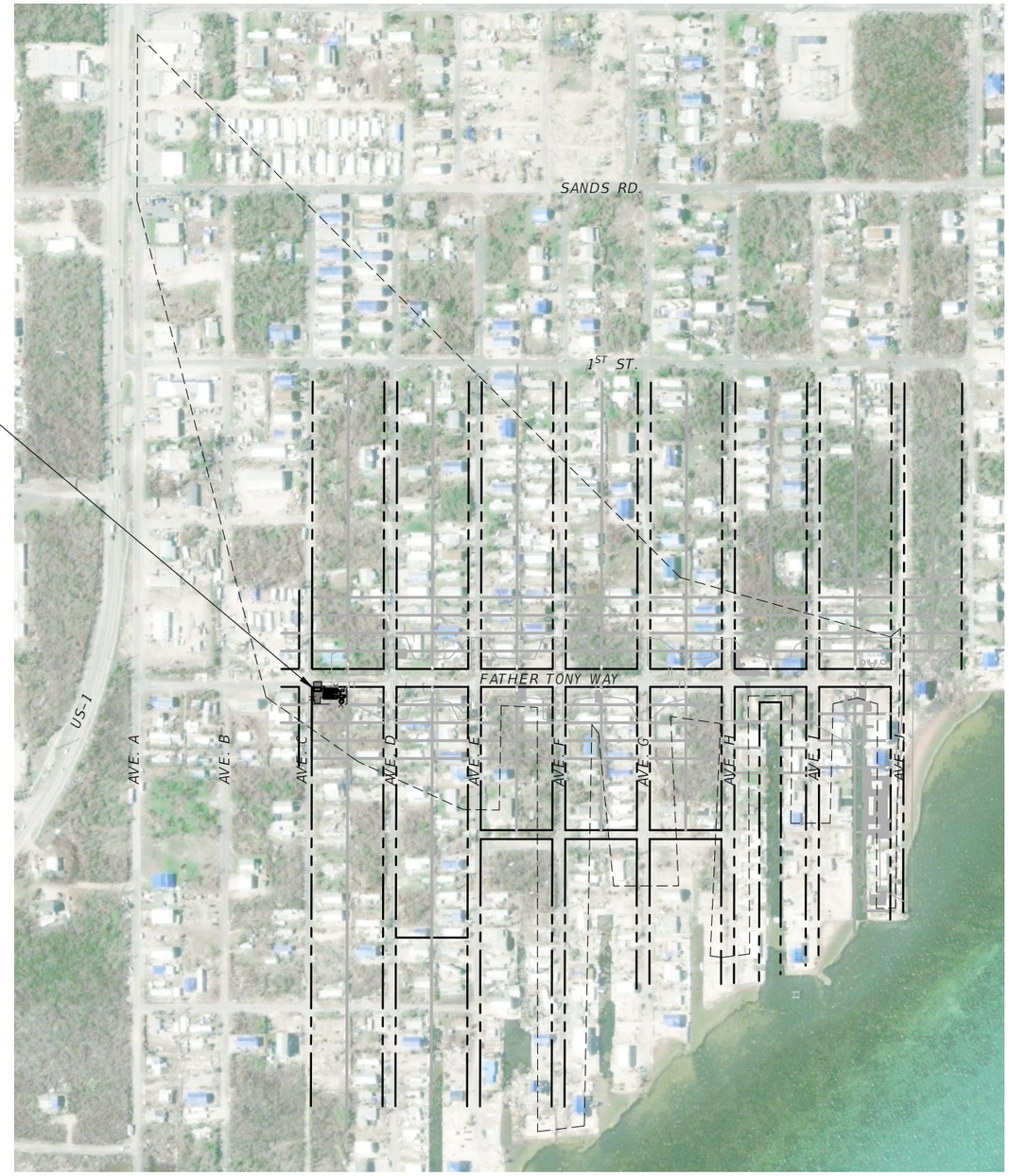

PROPOSED PUMP STATION LOCATION

1" = 400'

LEGEND:

DRAINAGE AREA

RIGHT OF WAY

PROPERTY LINE

THE OFFICIAL RECORD OF THIS SHEET IS THE ELECTRONIC FILE DIGITALLY SIGNED AND SEALED UNDER RULE 61G15-23.004, F.A.C.

REVISIONS			
DATE	DESCRIPTION	DATE	DESCRIPTION

WERNER REINEFELD, P.E.
P.E. LICENSE NUMBER 63042
WSP USA, 7650 CORPORATE CENTER DRIVE,
SUITE 300, MIAMI, FLORIDA 33126
CERTIFICATE OF AUTHORIZATION 01462

SEA LEVEL RISE ROADWAY AND DRAINAGE PILOT PROJECT (KEY LARGO AND BIG PINE KEY)
MONROE COUNTY - DEPARTMENT OF ENGINEERING

DRAINAGE MAP

SHEET NO.

PS-1B

GENERAL NOTES:

1. PROPOSED IMPROVEMENTS SHALL BE IN ACCORDANCE WITH THE MONROE COUNTY PUBLIC WORKS MANUAL.
2. CONTRACTOR SHALL INCLUDE NECESSARY CUTTING, PATCHING AND RESTORATION OF ALL EXISTING SURFACES TO MATCH SURROUNDING AREAS.
3. FIELD VERIFY ALL ELEVATIONS PRIOR TO COMMENCING THE WORK.
4. CONTRACTOR SHALL VERIFY EXISTING PIPING TO REMAIN BEFORE ORDERING PROPOSED PIPING/FITTINGS CONNECTING TO IT.
5. CARE SHOULD BE TAKEN TO AVOID DISTURBING EXISTING ELECTRICAL SERVICE IN THE AREA UNDER CONSTRUCTION.
6. MECHANICAL CONTRACTOR SHALL CHECK AND VERIFY ALL DIMENSIONS AND CONDITIONS AT JOB SITE AND COORDINATE NEW WORK TO BE DONE WITH THEIR TRADES PRIOR TO COMMENCING IT. THE MECHANICAL WORK SHALL BE SCHEDULED SO THAT IT WILL OCCUR IN THE PROPER SEQUENCE AND WITHOUT DELAYING THE COMPLETION OF THE WORK.
7. SHEET PILING MAY BE REQUIRED FOR EXCAVATION. IF SO CONTRACTOR SHALL SUBMIT SHOP DRAWINGS AND CALCULATIONS SIGNED AND SEALED BY A STATE OF FLORIDA LICENSED PROFESSIONAL ENGINEER.

LEGEND

- RIGHT OF WAY
- PROPERTY LINE
- CHAIN LINK FENCE
- STORM SEWER
- FORCE MAIN
- FIRE HYDRANT
- WATER VALVE
- VALVE
- SANITARY MANHOLE
- SANITARY VALVE
- UTILITY POLE
- MAILBOX
- SIGN
- PROPOSED STRUCTURE
- PROPOSED GRAVEL
- PROPOSED COMPACTED GRAVEL

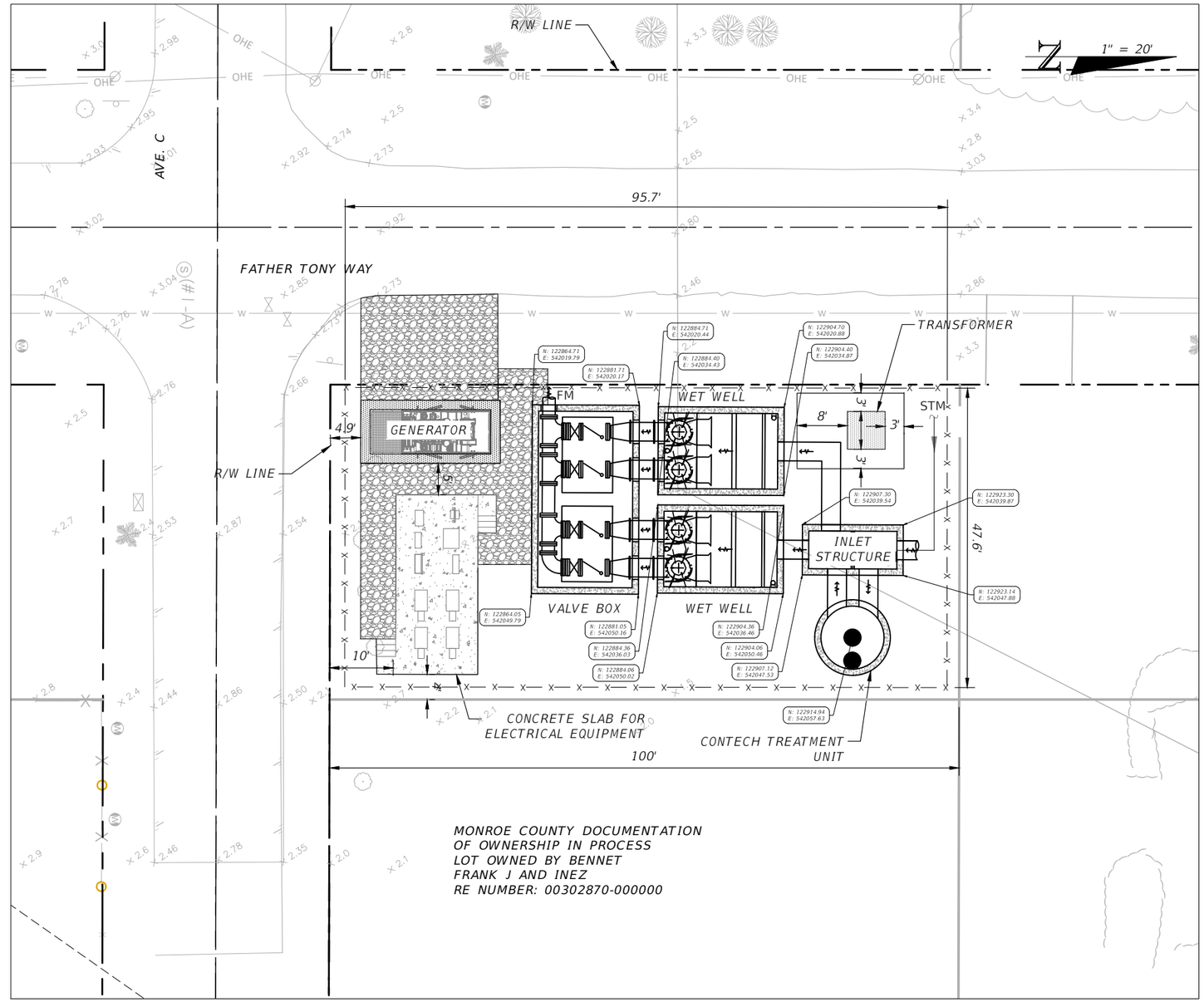

PROPOSED PUMP STATION SITE PLAN

THE OFFICIAL RECORD OF THIS SHEET IS THE ELECTRONIC FILE DIGITALLY SIGNED AND SEALED UNDER RULE 61G15-23.004, F.A.C.

REVISIONS			
DATE	DESCRIPTION	DATE	DESCRIPTION

WERNER REINEFELD, P.E.
P.E. LICENSE NUMBER 63042
WSP USA, 7650 CORPORATE CENTER DRIVE,
SUITE 300, MIAMI, FLORIDA 33126
CERTIFICATE OF AUTHORIZATION 01462

SEA LEVEL RISE ROADWAY AND DRAINAGE PILOT PROJECT (KEY LARGO AND BIG PINE KEY)
MONROE COUNTY - DEPARTMENT OF ENGINEERING

PUMP STATION SITE PLAN

SHEET NO. PS-2B

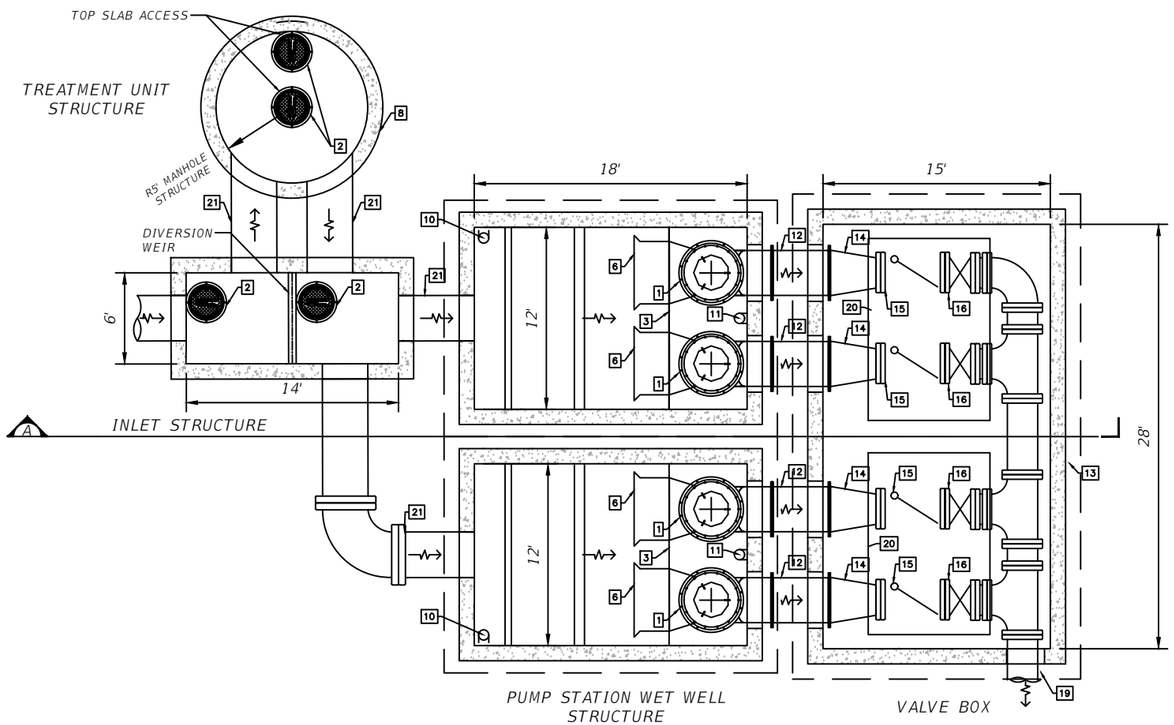

PLAN VIEW
SCALE 1:10

MECHANICAL BILL OF MATERIALS			
#	DESCRIPTION	UNIT	QTY.
1.0	SHROUDED SINGLE OR MULTI-CHANNEL MIXED FLOW IMPELLER PUMP, FLYGT MODEL LL3400/706; GREY CAST IRON 3 BLADE 445mm ⊙ IMPELLER°; 460V/135hp 3 PHASE MOTOR MODEL L0706.000 43-30-8ID-W; SUBMERSIBLE CABLE, PUMP SUPPORT, LIFTING CHAIN, LIFT TUBE WITH ELBOW AND FLANGE CONNECTION, AND ALL OTHER ITEMS REQUIRED FOR COMPLETE INSTALLATION.	EA.	4
2.0	30" MANHOLE COVER - HS20 LOAD RATED (CONTECH)	EA.	4
3.0	60"X168" ALUMINUM ACCESS HATCH, HS20 RATED, W/ AUTOMATIC HOLD OPEN ARM & SLAM LOCK	EA.	4
4.0	36" VERTICAL DISCHARGE PIPE STAINLESS STEEL (FLYGT)	EA.	4
5.0	36" DISCHARGE ELBOW COVER (FLYGT)	EA.	4
6.0	36" FORMED SUCTION INTAKE (FLGYT)	EA.	4
7.0	36" DISCHARGE ELBOW WITH FLANGED END (ANSI 125 - FLYGT)	EA.	4
8.0	POLLUTION TREATMENT UNIT - CONTECH CDS MODEL CDS5678-10-C	EA.	1
9.0	FIBERGLASS INLET FLUME FOR CONTECH CDS	EA.	1
10.0	LEVEL SENSOR - PRESSURE TRANSDUCER (FLYGT)	EA.	2
11.0	LEVEL SENSOR - FLOAT (FLYGT)	EA.	2

MECHANICAL BILL OF MATERIALS			
#	DESCRIPTION	UNIT	QTY.
12.0	24" SPOOL PIECE D.I.P. FLG.XPLAIN END (2 L.F.)	EA.	4
13.0	24" D.I.P. (1.6 L.F.)	EA.	4
14.0	36"X24" D.I.P. REDUCER	EA.	4
15.0	HORIZONTAL SWING 24" DIA. CHECK VALVE FLANGED	EA.	4
16.0	24" DIA. GATE VALVE FLANGED	EA.	4
17.0	PRESSURE GAUGES	EA.	4
18.0	1" DIA. GATE VALVE	EA.	4
19.0	24" D.I.P. EFFLUENT PIPE	EA.	4
20.0	120"X144" ALUMINUM ACCESS HATCH, H2S0 RATED, W/ AUTOMATIC HOLD OPEN ARM & SLAM LOCK	EA.	4
21.0	36" H.D.P.E.	L.F.	40

PUMP SCHEDULE	
HIGH WATER ALARM	(-) 6.20 FT NAVD
ALL PUMPS ON	(-) 6.50 FT NAVD
LAG PUMP ON	(-) 7.20 FT NAVD
LEAD PUMP ON	(-) 8.20 FT NAVD
PUMPS OFF	(-) 18.20 FT NAVD
LOW WATER ALARM	(-) 19.20 FT NAVD

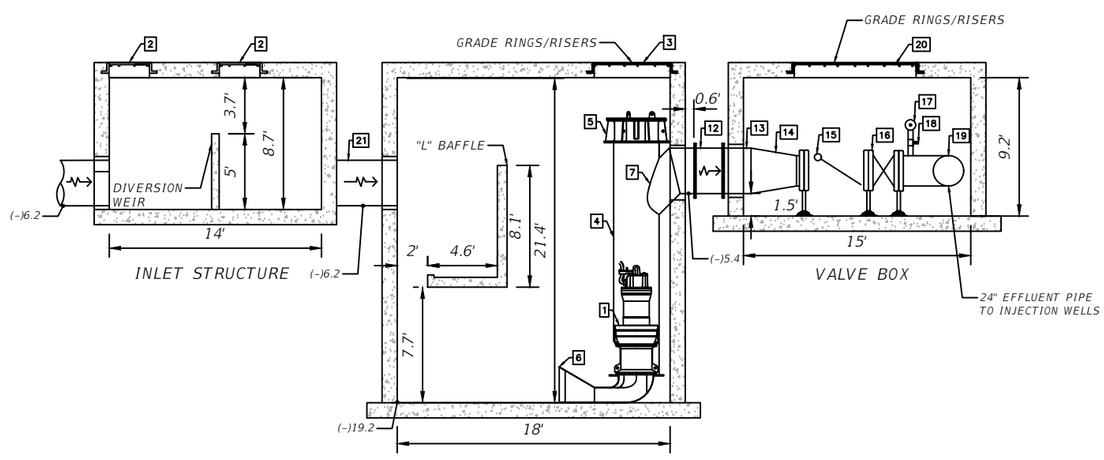

SECTION A
SCALE 1:10

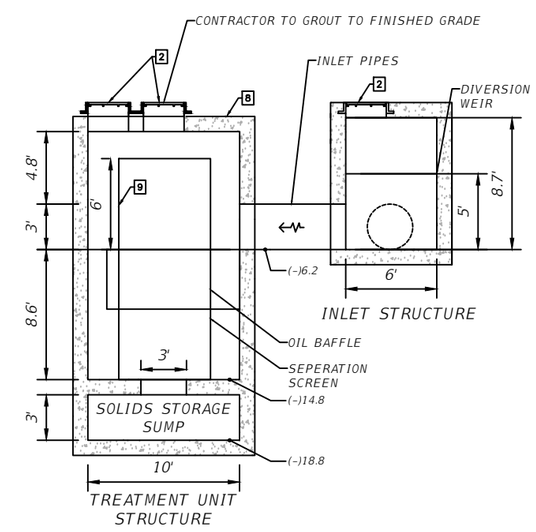

SECTION B
SCALE 1:10

REVISIONS			
DATE	DESCRIPTION	DATE	DESCRIPTION

WERNER REINEFELD, P.E.
P.E. LICENSE NUMBER 63042
WSP USA, 7650 CORPORATE CENTER DRIVE,
SUITE 300, MIAMI, FLORIDA 33126
CERTIFICATE OF AUTHORIZATION 01462

SEA LEVEL RISE ROADWAY AND DRAINAGE PILOT PROJECT (KEY LARGO AND BIG PINE KEY)
MONROE COUNTY - DEPARTMENT OF ENGINEERING

PUMP STATION MECHANICAL LAYOUT

SHEET NO. PS-3B

THE OFFICIAL RECORD OF THIS SHEET IS THE ELECTRONIC FILE DIGITALLY SIGNED AND SEALED UNDER RULE 61G15-23.004, F.A.C.

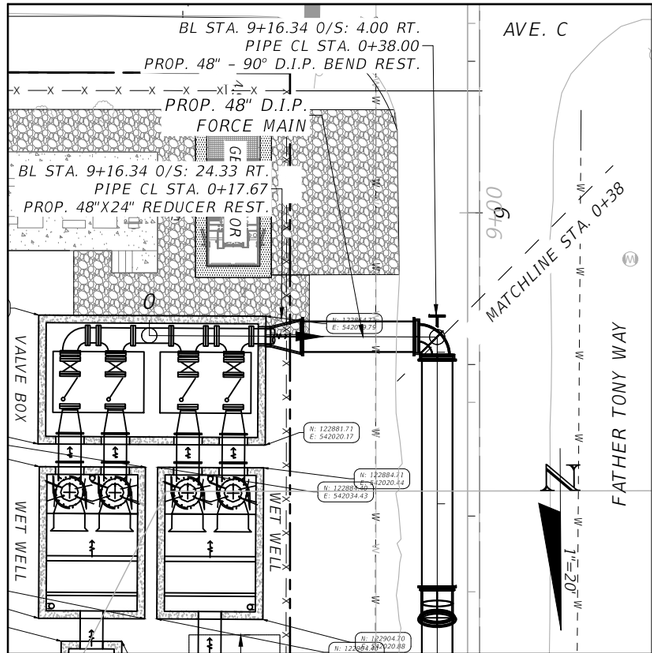

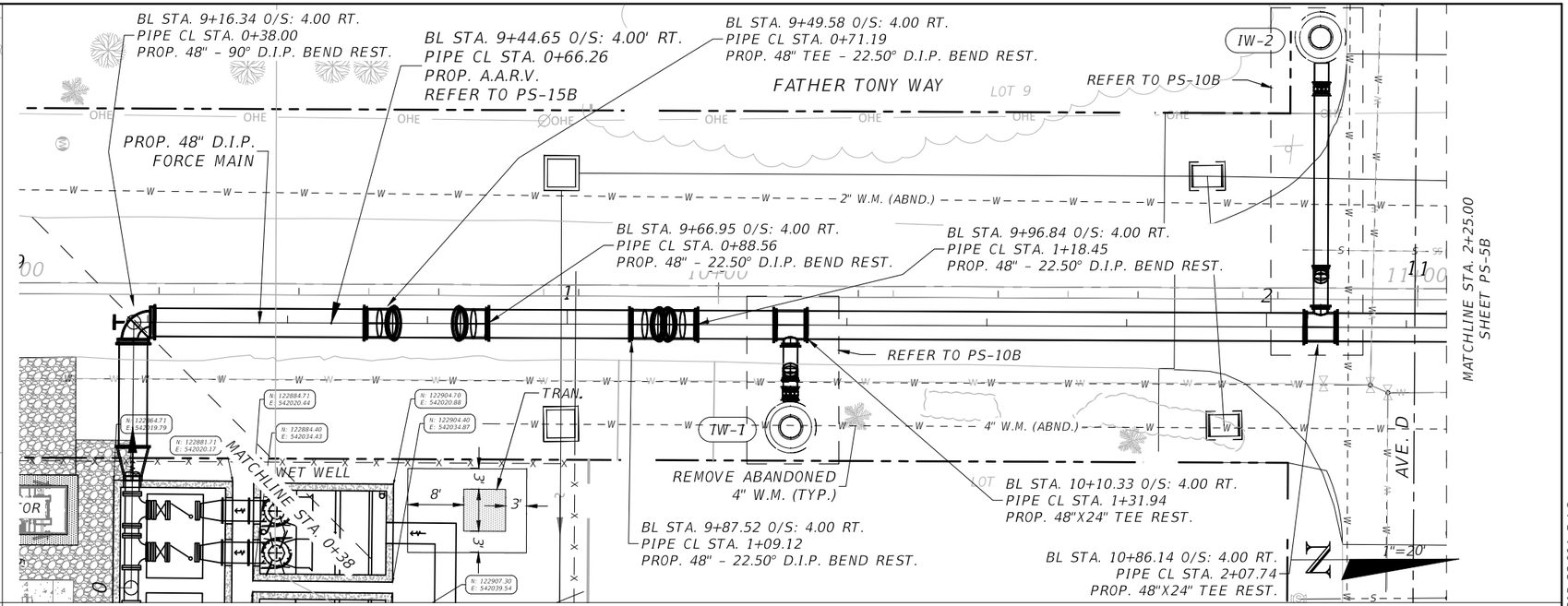

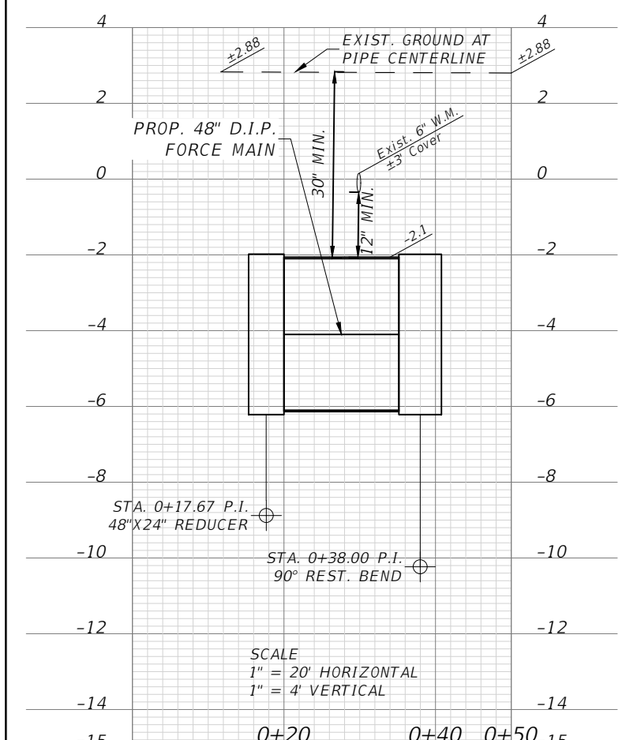

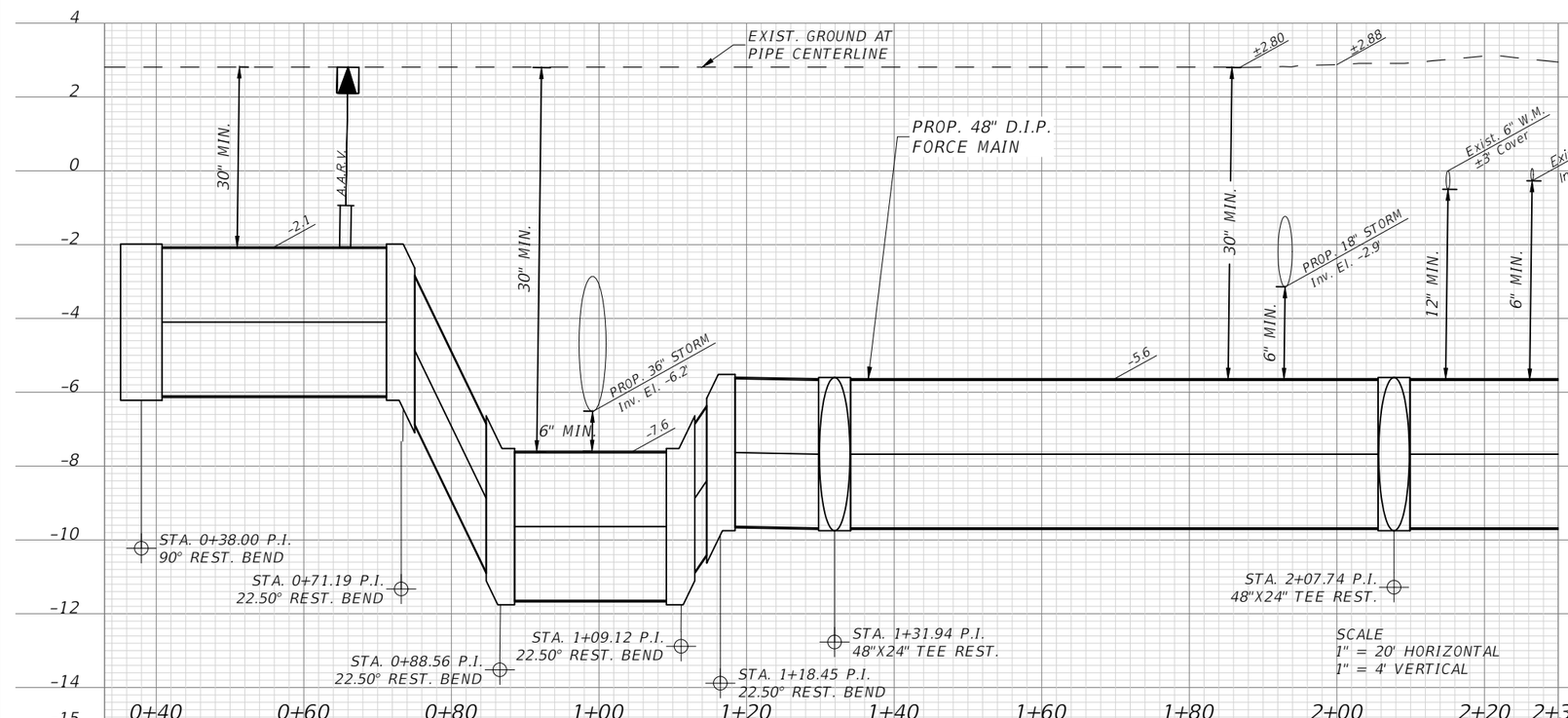

REVISIONS			
DATE	DESCRIPTION	DATE	DESCRIPTION

WERNER REINEFELD, P.E.
P.E. LICENSE NUMBER 63042
WSP USA, 7650 CORPORATE CENTER DRIVE,
SUITE 300, MIAMI, FLORIDA 33126
CERTIFICATE OF AUTHORIZATION 01462

SEA LEVEL RISE ROADWAY AND DRAINAGE PILOT PROJECT (KEY LARGO AND BIG PINE KEY)

MONROE COUNTY - DEPARTMENT OF ENGINEERING

FORCE MAIN PLAN & PROFILE

SHEET NO. PS-4B

THE OFFICIAL RECORD OF THIS SHEET IS THE ELECTRONIC FILE DIGITALLY SIGNED AND SEALED UNDER RULE 61G15-23.004, F.A.C.

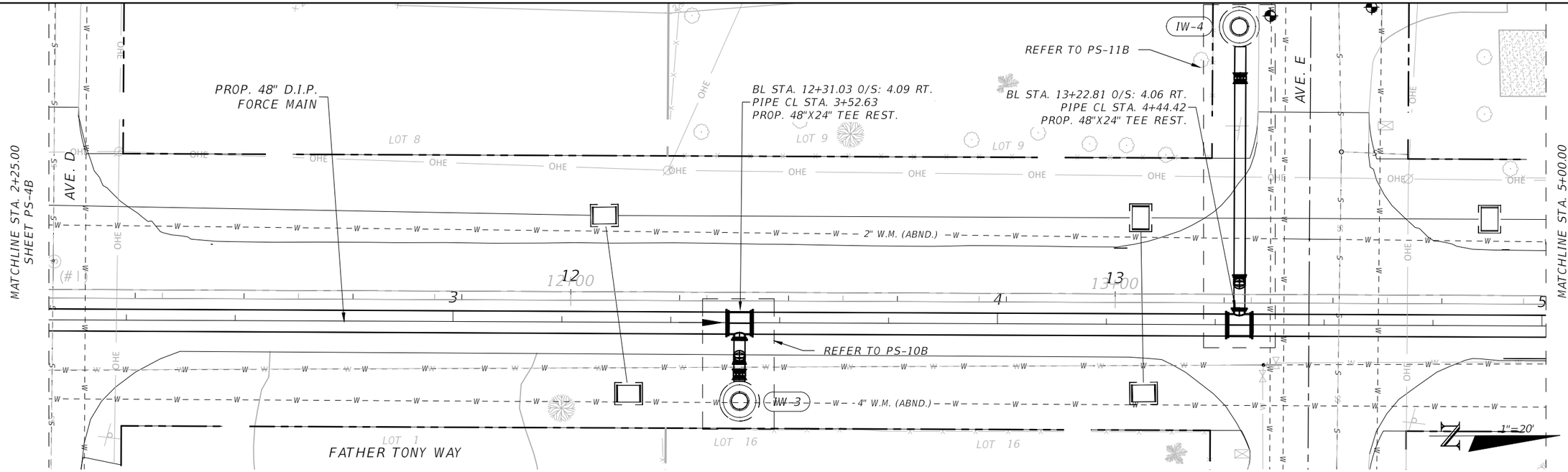

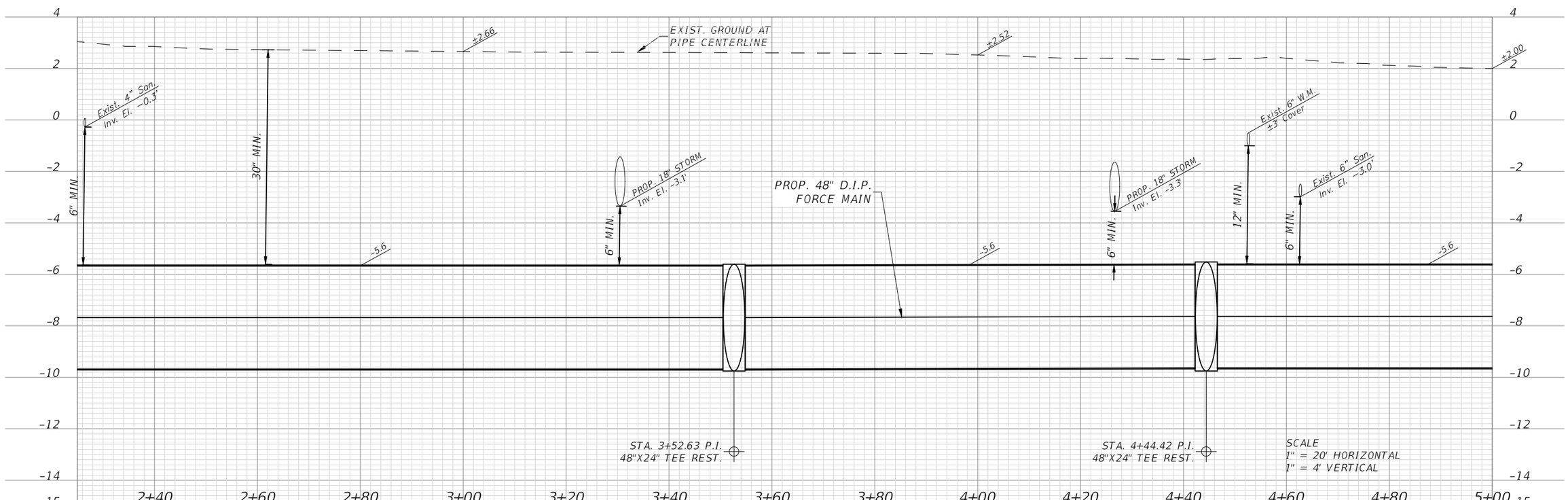

REVISIONS			
DATE	DESCRIPTION	DATE	DESCRIPTION

WERNER REINEFELD, P.E.
P.E. LICENSE NUMBER 63042
WSP USA, 7650 CORPORATE CENTER DRIVE,
SUITE 300, MIAMI, FLORIDA 33126
CERTIFICATE OF AUTHORIZATION 01462

SEA LEVEL RISE ROADWAY AND DRAINAGE PILOT PROJECT (KEY LARGO AND BIG PINE KEY)

MONROE COUNTY - DEPARTMENT OF ENGINEERING

FORCE MAIN PLAN & PROFILE

SHEET NO. PS-5B

THE OFFICIAL RECORD OF THIS SHEET IS THE ELECTRONIC FILE DIGITALLY SIGNED AND SEALED UNDER RULE 61G15-23.004, F.A.C.

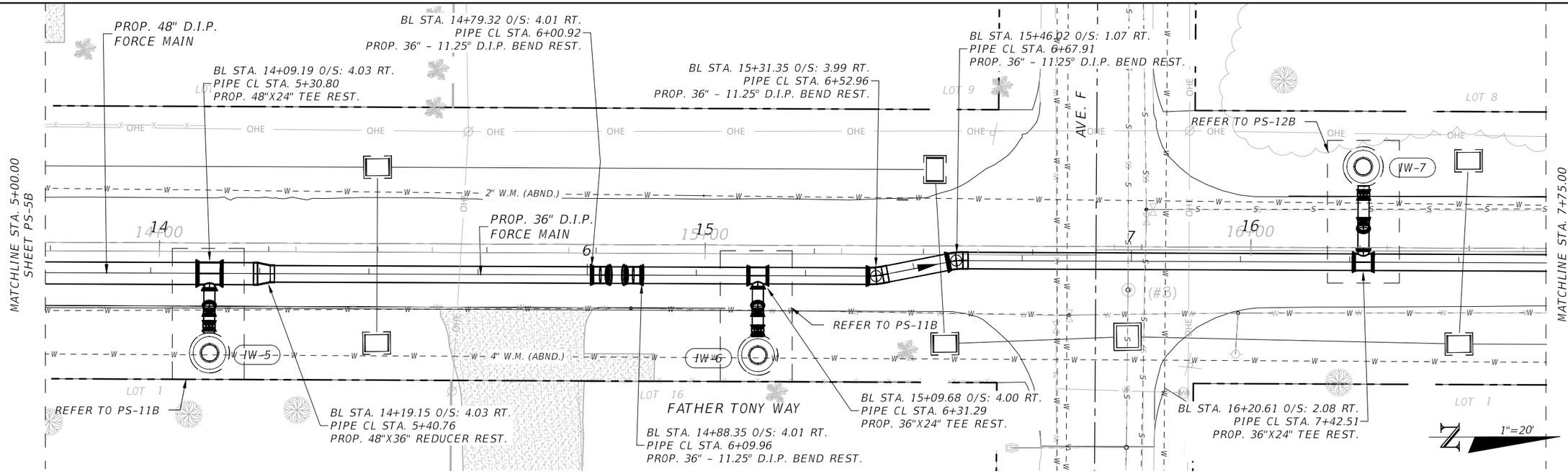

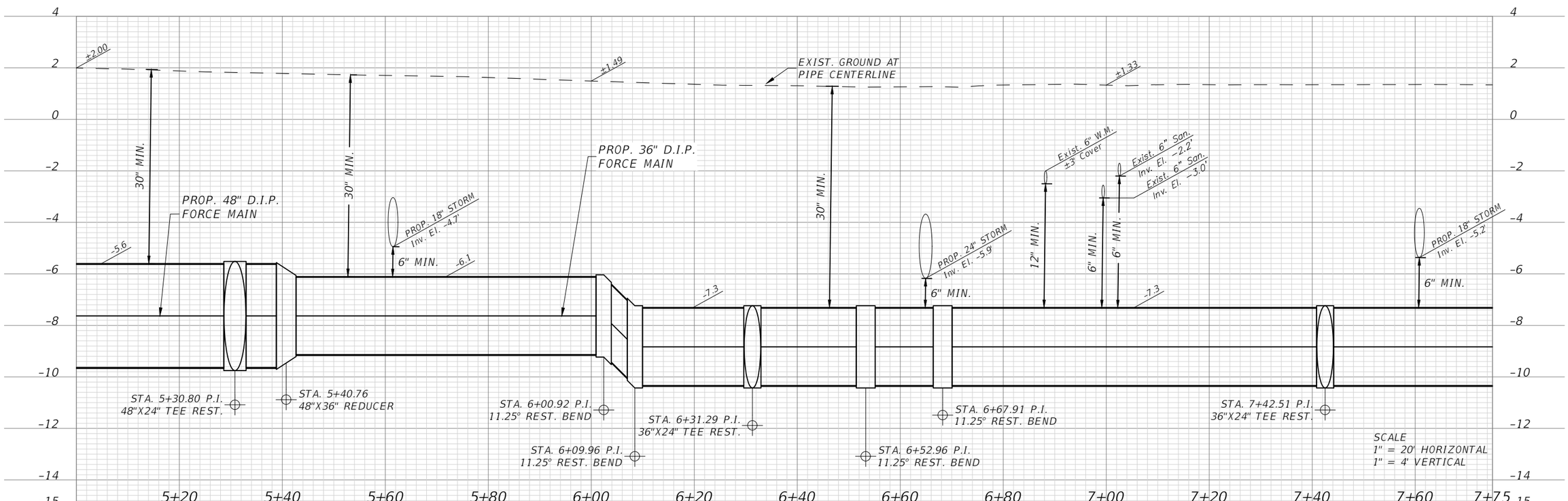

REVISIONS			
DATE	DESCRIPTION	DATE	DESCRIPTION

WERNER REINEFELD, P.E.
P.E. LICENSE NUMBER 63042
WSP USA, 7650 CORPORATE CENTER DRIVE,
SUITE 300, MIAMI, FLORIDA 33126
CERTIFICATE OF AUTHORIZATION 01462

SEA LEVEL RISE ROADWAY AND DRAINAGE PILOT PROJECT (KEY LARGO AND BIG PINE KEY)

MONROE COUNTY - DEPARTMENT OF ENGINEERING

FORCE MAIN PLAN & PROFILE

SHEET NO. PS-6B

THE OFFICIAL RECORD OF THIS SHEET IS THE ELECTRONIC FILE DIGITALLY SIGNED AND SEALED UNDER RULE 61G15-23.004, F.A.C.

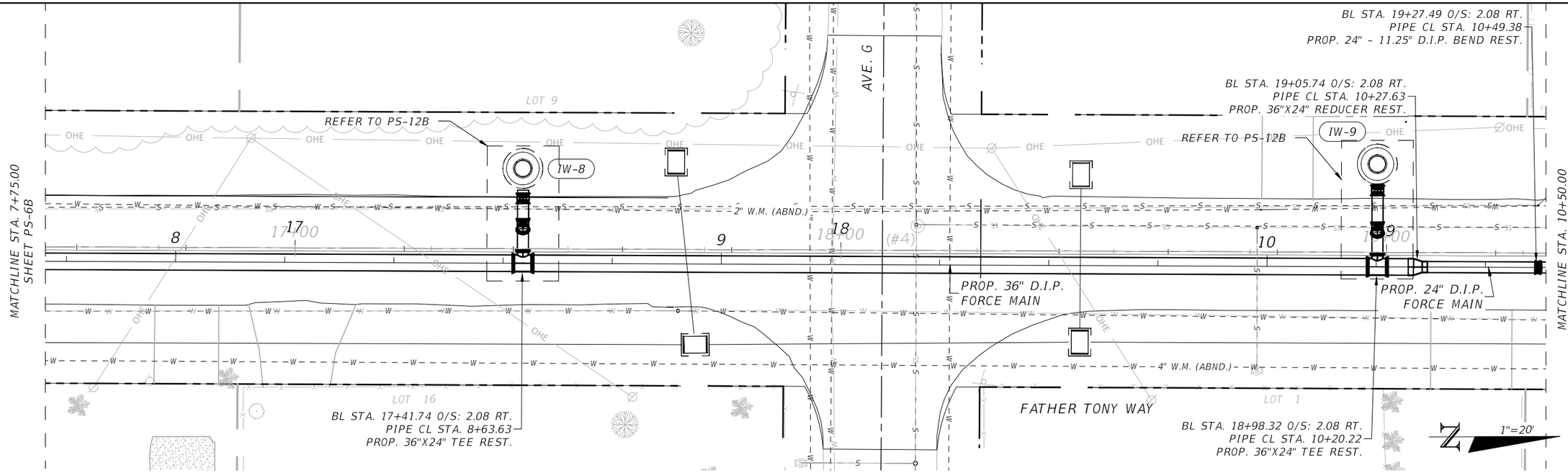

REVISIONS			
DATE	DESCRIPTION	DATE	DESCRIPTION

WERNER REINEFELD, P.E.
P.E. LICENSE NUMBER 63042
WSP USA, 7650 CORPORATE CENTER DRIVE,
SUITE 300, MIAMI, FLORIDA 33126
CERTIFICATE OF AUTHORIZATION 01462

SEA LEVEL RISE ROADWAY AND DRAINAGE PILOT PROJECT (KEY LARGO AND BIG PINE KEY)

MONROE COUNTY - DEPARTMENT OF ENGINEERING

FORCE MAIN PLAN & PROFILE

SHEET NO. PS-7B

THE OFFICIAL RECORD OF THIS SHEET IS THE ELECTRONIC FILE DIGITALLY SIGNED AND SEALED UNDER RULE 61G15-23.004, F.A.C.

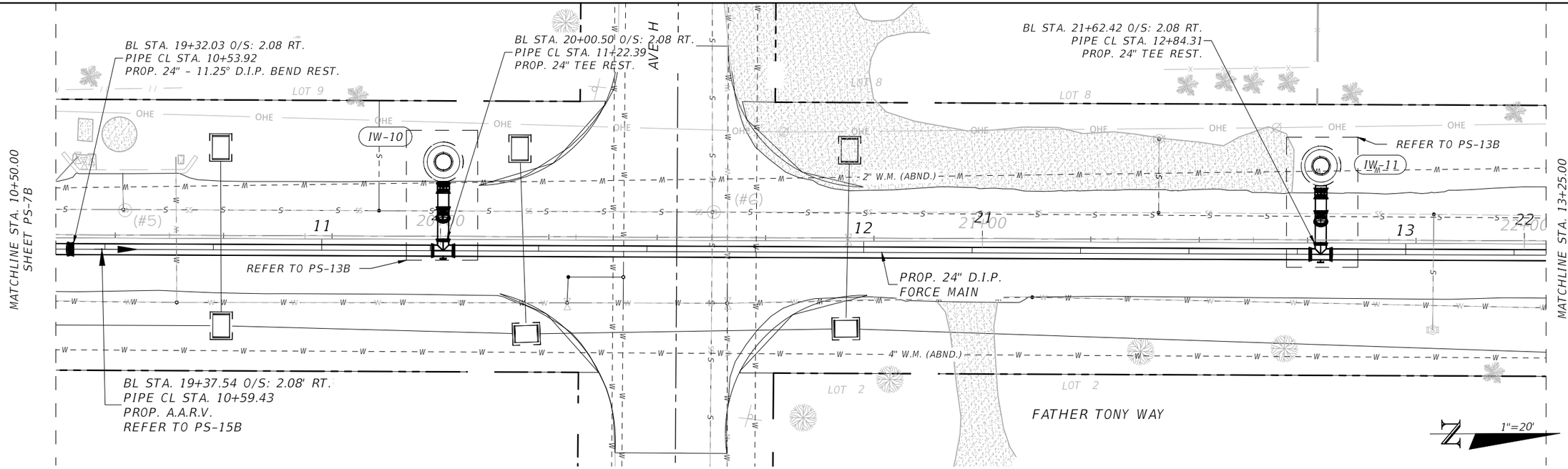

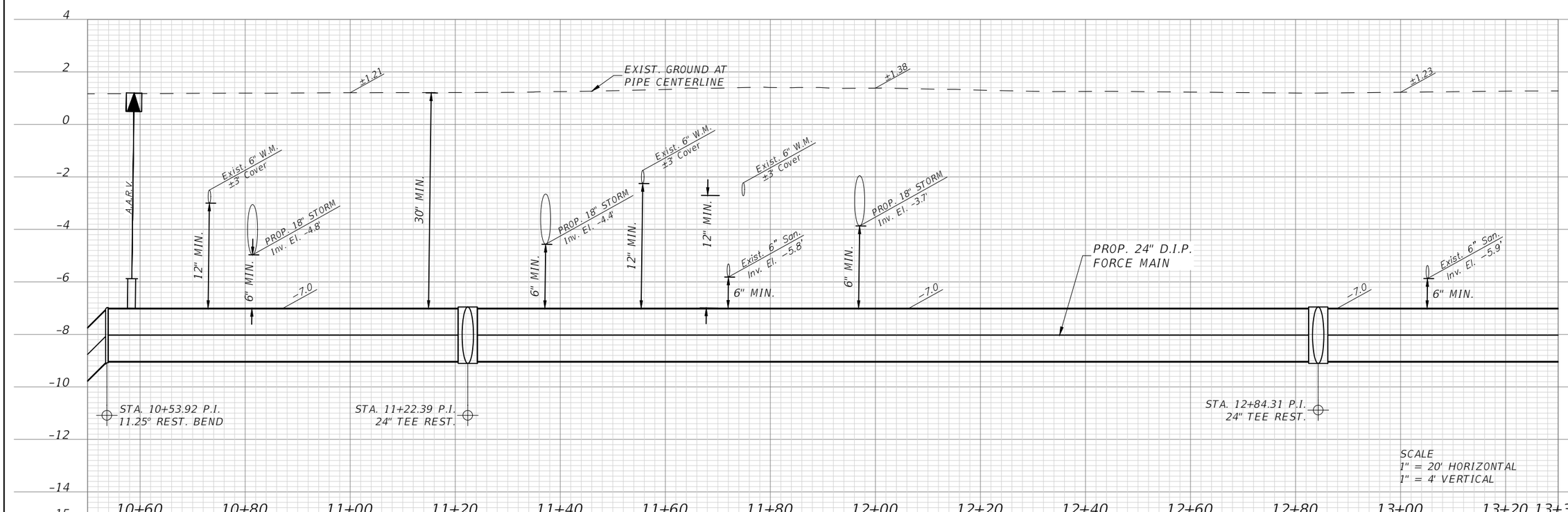

REVISIONS			
DATE	DESCRIPTION	DATE	DESCRIPTION

WERNER REINEFELD, P.E.
P.E. LICENSE NUMBER 63042
WSP USA, 7650 CORPORATE CENTER DRIVE,
SUITE 300, MIAMI, FLORIDA 33126
CERTIFICATE OF AUTHORIZATION 01462

SEA LEVEL RISE ROADWAY AND DRAINAGE PILOT PROJECT (KEY LARGO AND BIG PINE KEY)

MONROE COUNTY - DEPARTMENT OF ENGINEERING

FORCE MAIN PLAN & PROFILE

SHEET NO. PS-8B

THE OFFICIAL RECORD OF THIS SHEET IS THE ELECTRONIC FILE DIGITALLY SIGNED AND SEALED UNDER RULE 61G15-23.004, F.A.C.

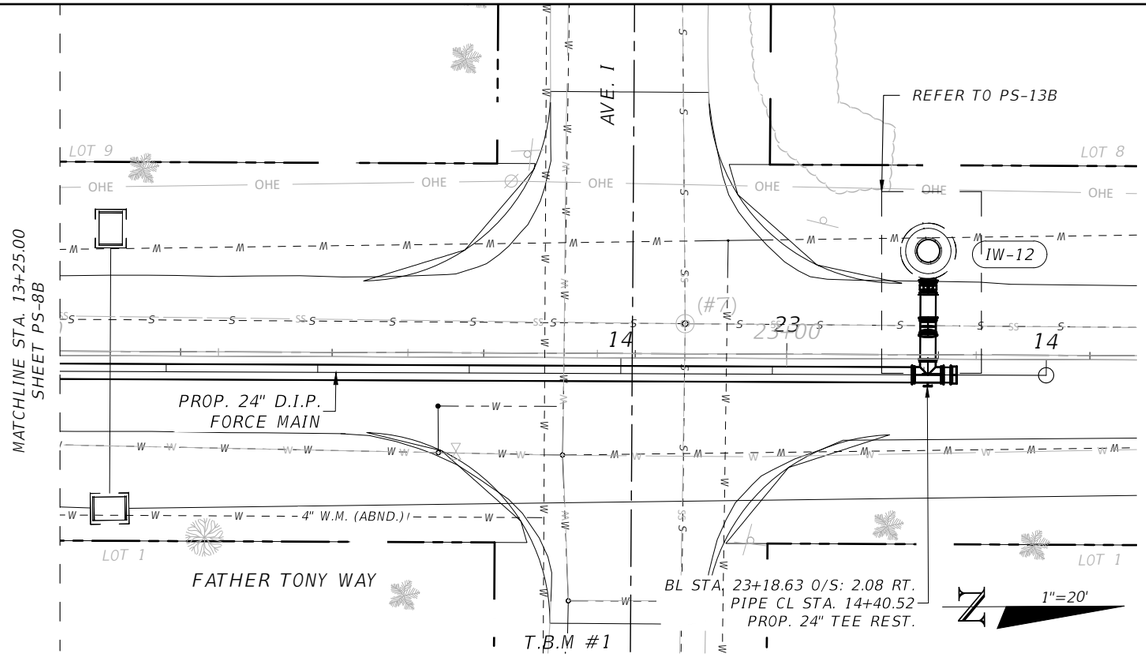

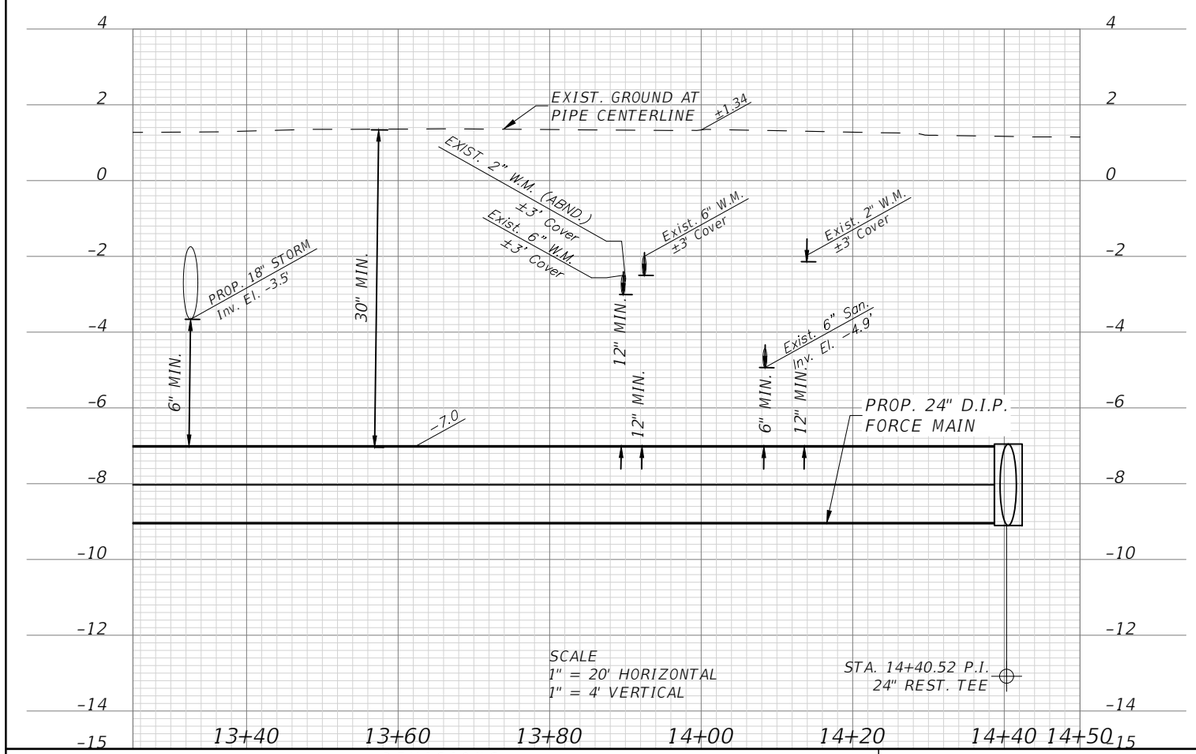

SCALE
1" = 20' HORIZONTAL
1" = 3' VERTICAL

REVISIONS			
DATE	DESCRIPTION	DATE	DESCRIPTION

WERNER REINEFELD, P.E.
P.E. LICENSE NUMBER 63042
WSP USA, 7650 CORPORATE CENTER DRIVE,
SUITE 300, MIAMI, FLORIDA 33126
CERTIFICATE OF AUTHORIZATION 01462

SEA LEVEL RISE ROADWAY AND DRAINAGE PILOT PROJECT (KEY LARGO AND BIG PINE KEY)
MONROE COUNTY - DEPARTMENT OF ENGINEERING

FORCE MAIN PLAN & PROFILE

SHEET NO.
PS-9B

THE OFFICIAL RECORD OF THIS SHEET IS THE ELECTRONIC FILE DIGITALLY SIGNED AND SEALED UNDER RULE 61G15-23.004, F.A.C.

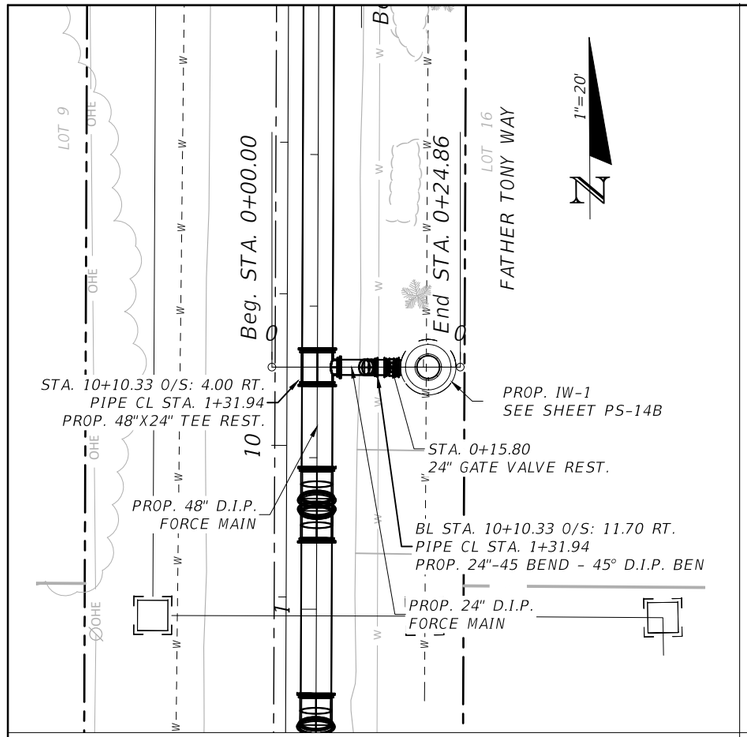

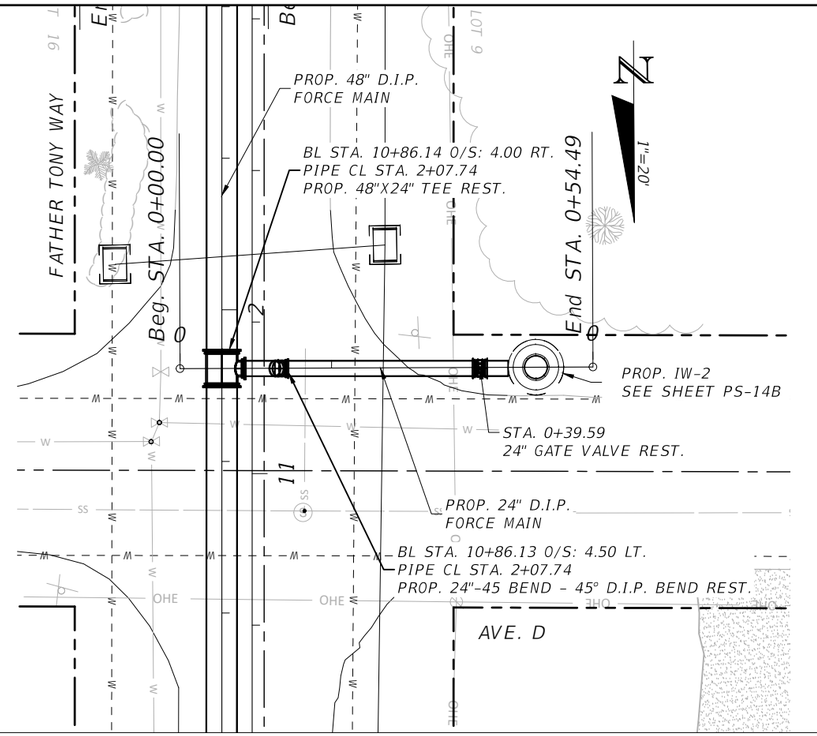

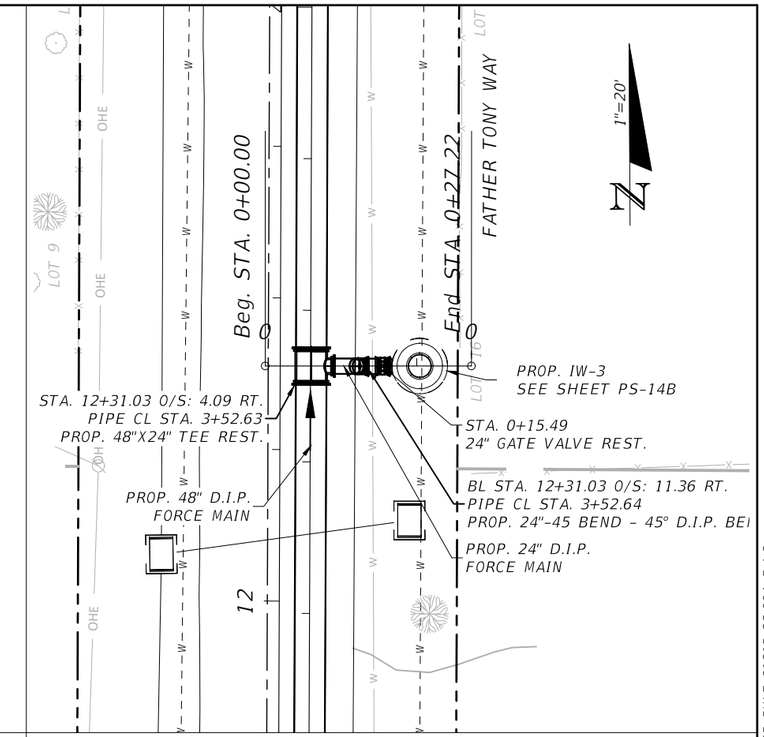

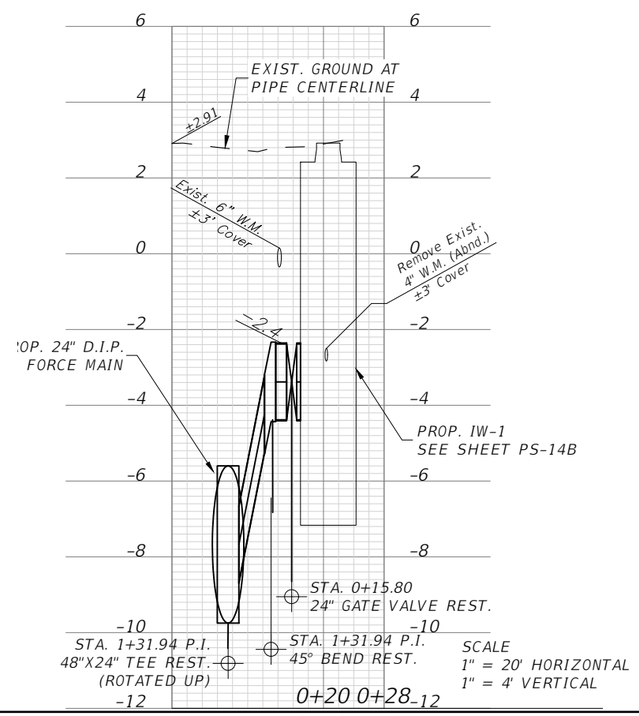

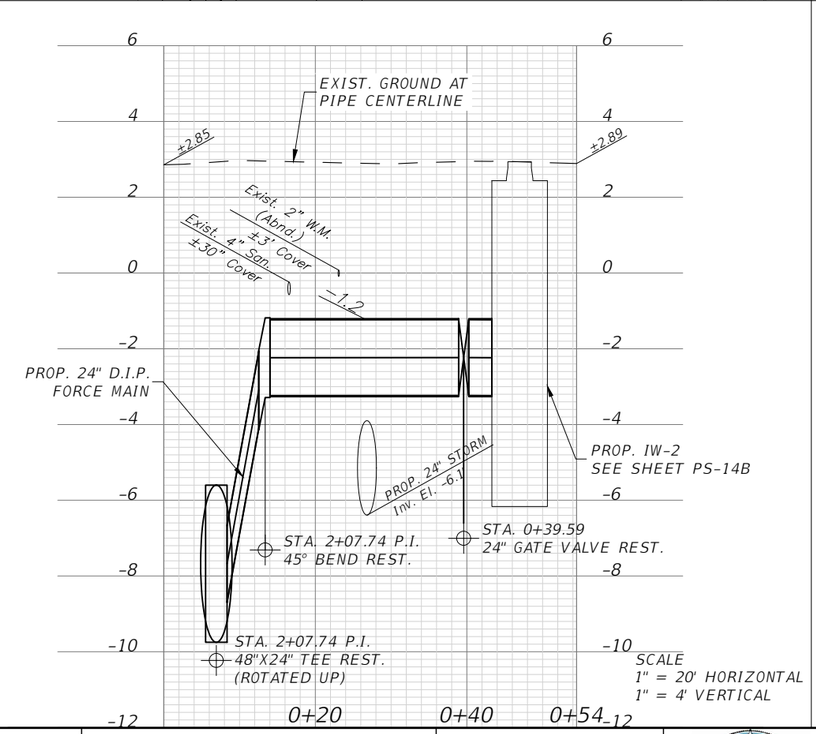

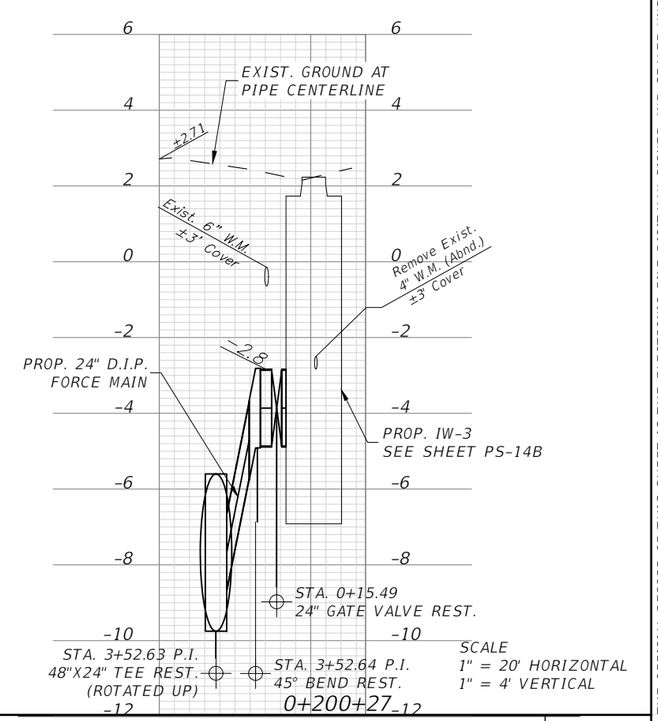

REVISIONS			
DATE	DESCRIPTION	DATE	DESCRIPTION

WERNER REINEFELD, P.E.
P.E. LICENSE NUMBER 63042
WSP USA, 7650 CORPORATE CENTER DRIVE,
SUITE 300, MIAMI, FLORIDA 33126
CERTIFICATE OF AUTHORIZATION 01462

SEA LEVEL RISE ROADWAY AND DRAINAGE PILOT PROJECT (KEY LARGO AND BIG PINE KEY)

MONROE COUNTY - DEPARTMENT OF ENGINEERING

INJECTION WELL PLAN & PROFILE

SHEET NO. PS-10B

THE OFFICIAL RECORD OF THIS SHEET IS THE ELECTRONIC FILE DIGITALLY SIGNED AND SEALED UNDER RULE 61G15-23.004, F.A.C.

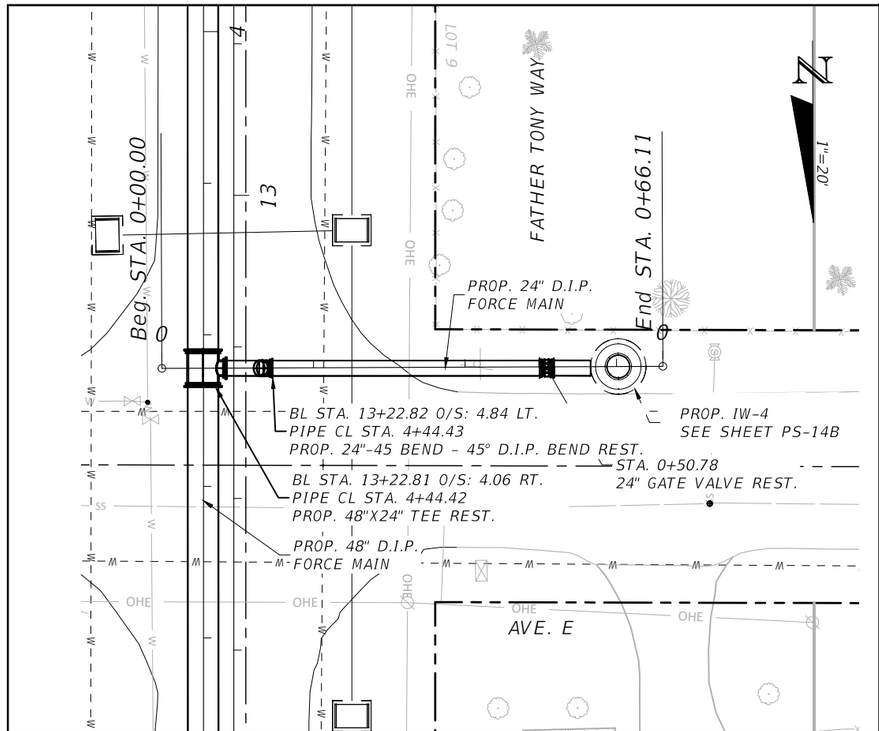

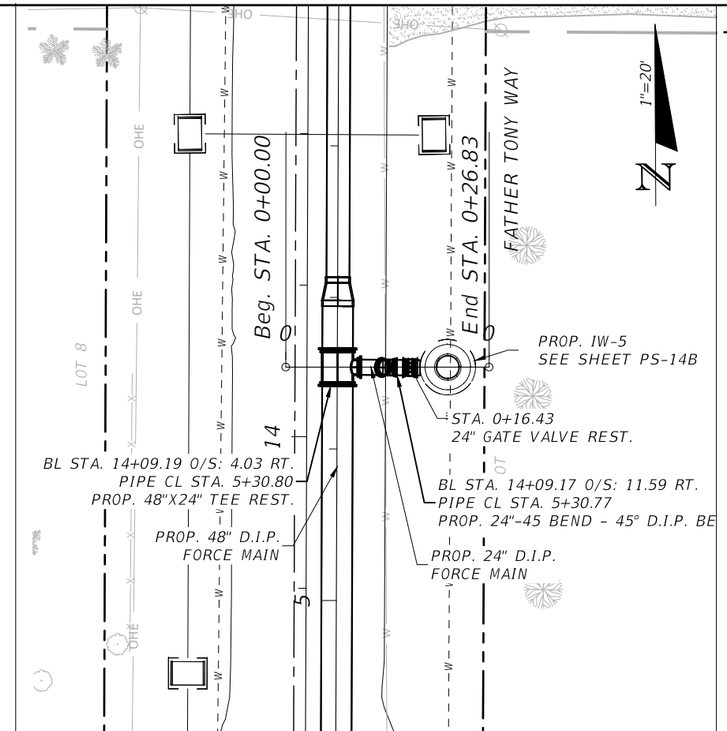

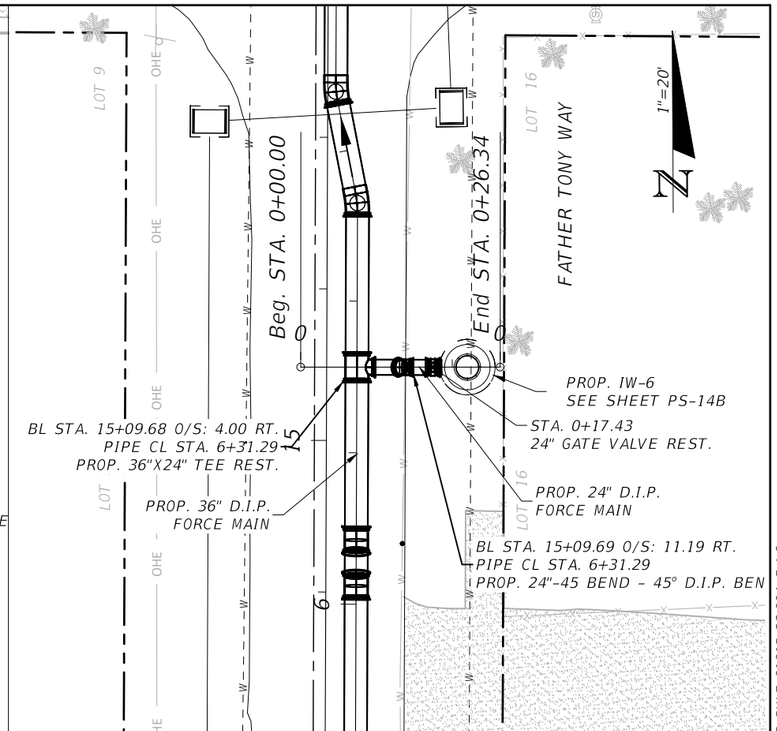

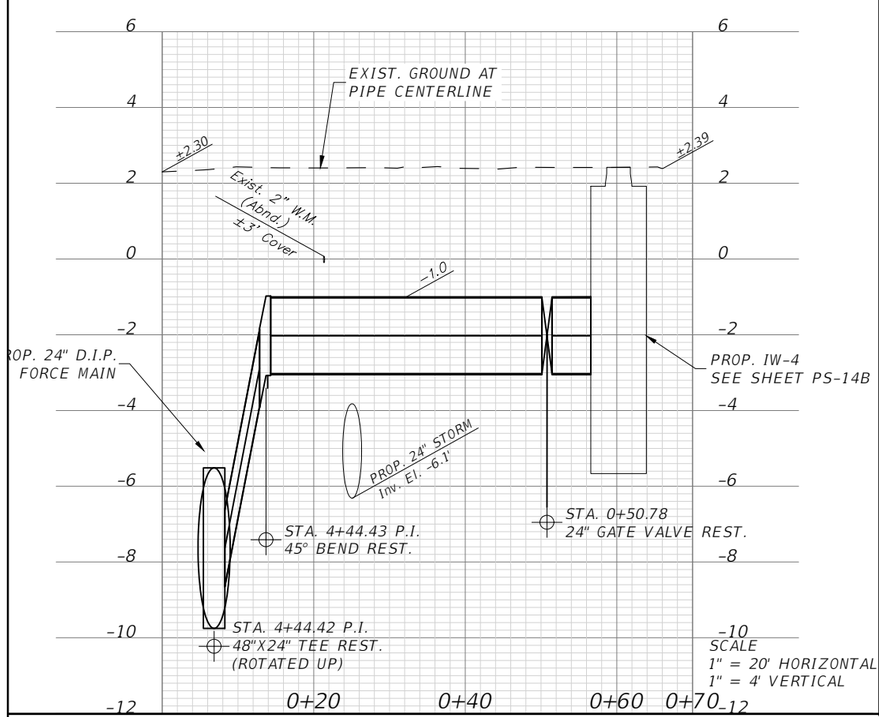

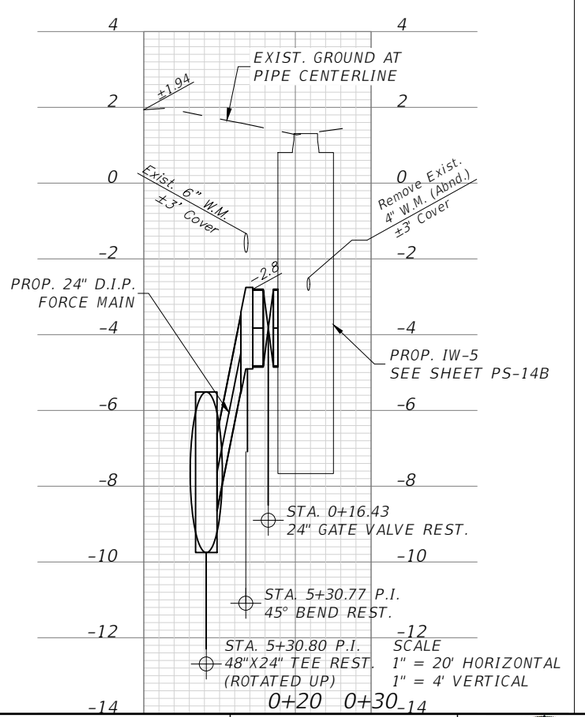

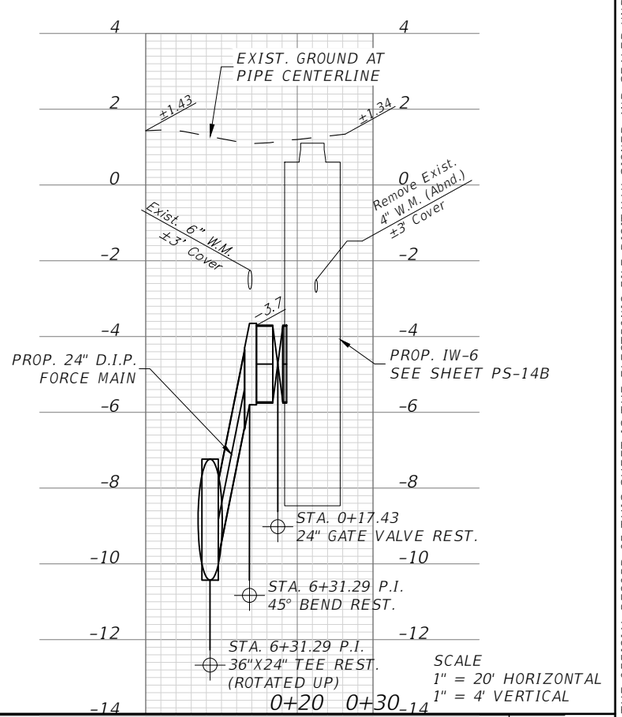

REVISIONS			
DATE	DESCRIPTION	DATE	DESCRIPTION

WERNER REINEFELD, P.E.
P.E. LICENSE NUMBER 63042
WSP USA, 7650 CORPORATE CENTER DRIVE,
SUITE 300, MIAMI, FLORIDA 33126
CERTIFICATE OF AUTHORIZATION 01462

SEA LEVEL RISE ROADWAY AND DRAINAGE PILOT PROJECT (KEY LARGO AND BIG PINE KEY)

MONROE COUNTY - DEPARTMENT OF ENGINEERING

INJECTION WELL PLAN & PROFILE

SHEET NO. PS-11B

THE OFFICIAL RECORD OF THIS SHEET IS THE ELECTRONIC FILE DIGITALLY SIGNED AND SEALED UNDER RULE 61G15-23.004, F.A.C.

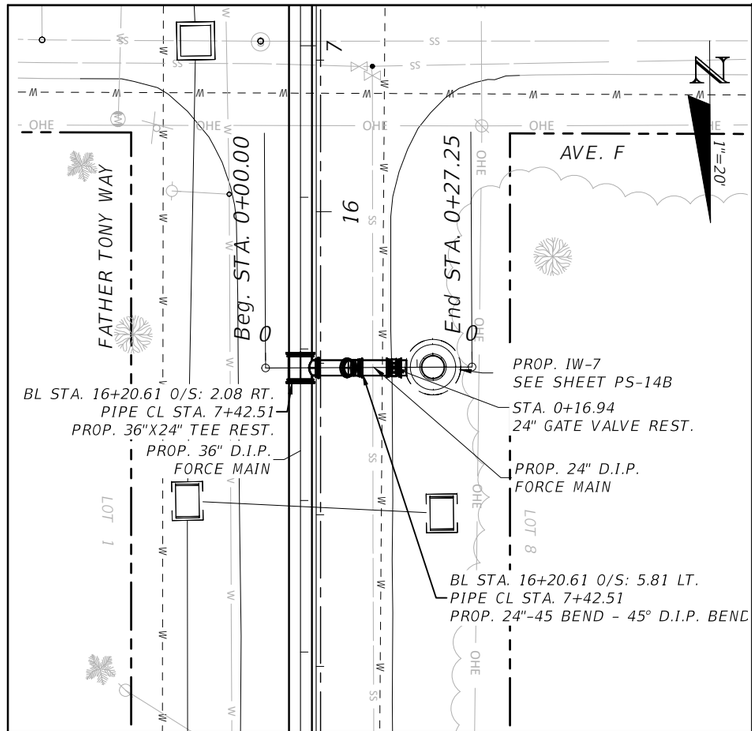

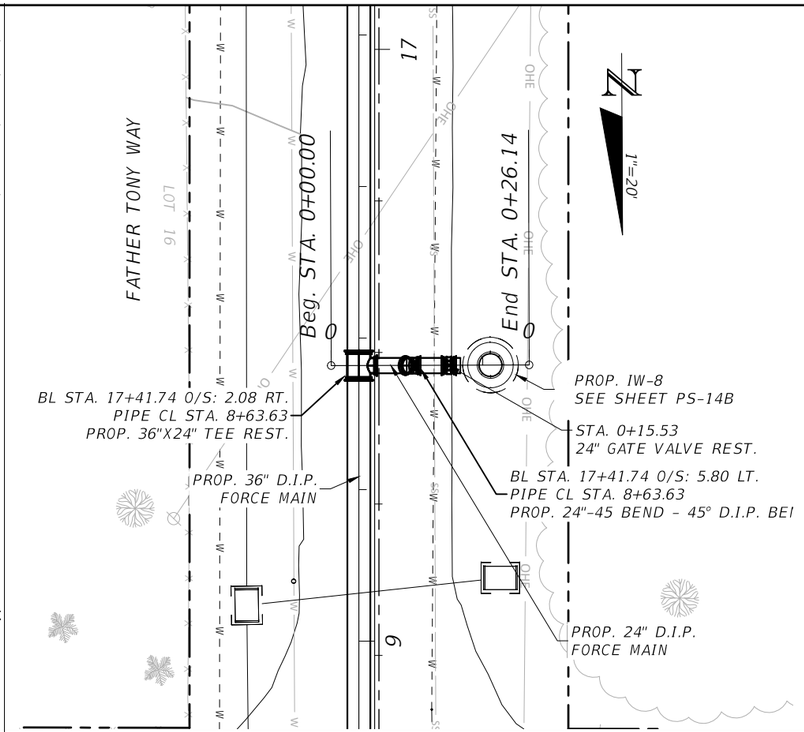

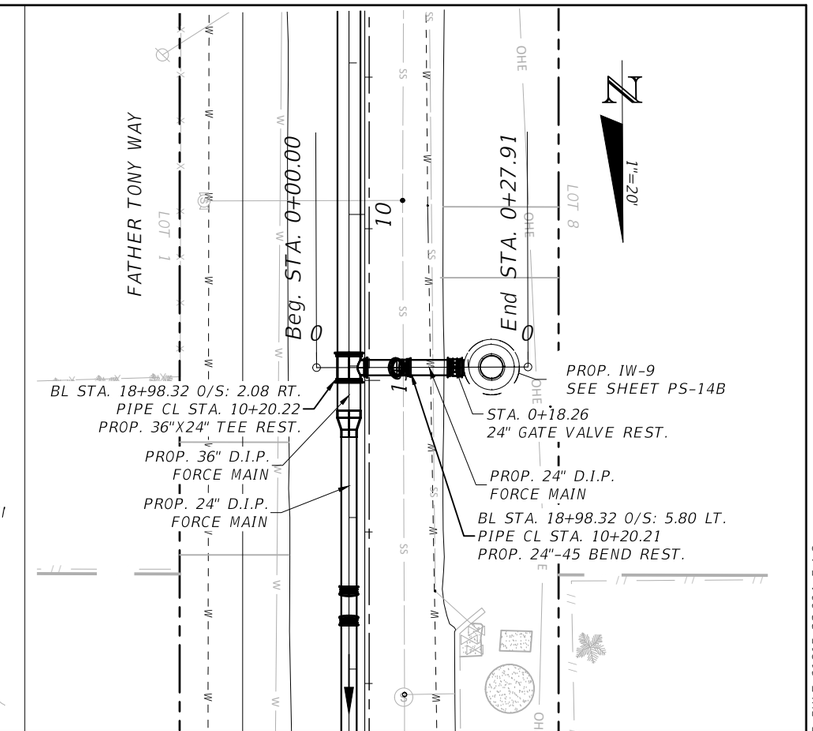

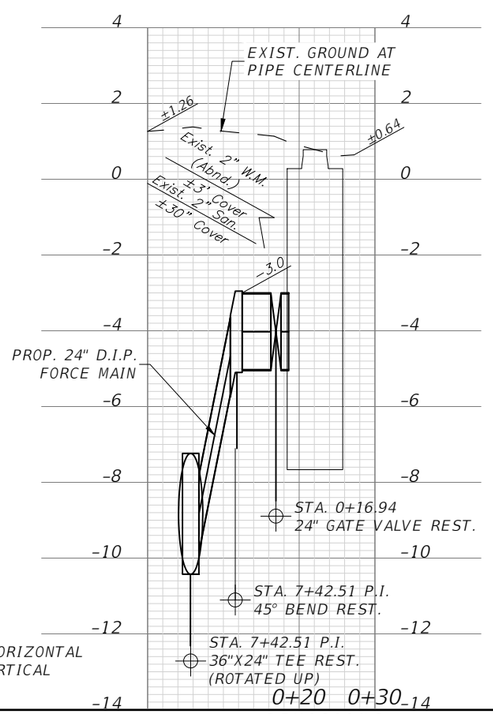

SCALE
1" = 20' HORIZONTAL
1" = 4' VERTICAL

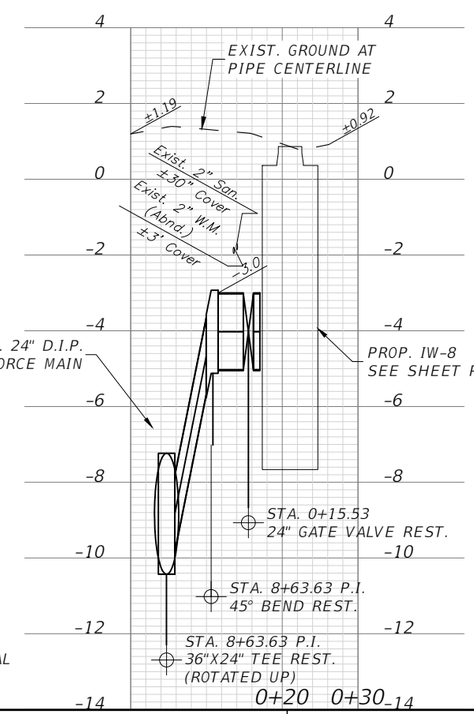

SCALE
1" = 20' HORIZONTAL
1" = 4' VERTICAL

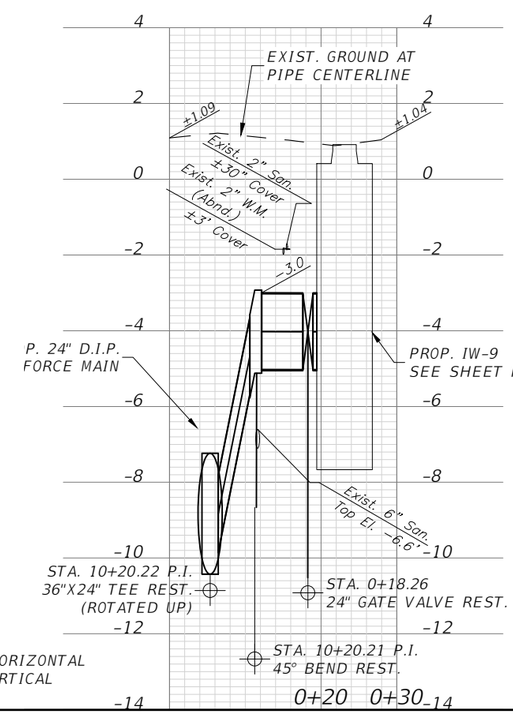

SCALE
1" = 20' HORIZONTAL
1" = 4' VERTICAL

REVISIONS			
DATE	DESCRIPTION	DATE	DESCRIPTION

WERNER REINEFELD, P.E.
P.E. LICENSE NUMBER 63042
WSP USA, 7650 CORPORATE CENTER DRIVE,
SUITE 300, MIAMI, FLORIDA 33126
CERTIFICATE OF AUTHORIZATION 01462

SEA LEVEL RISE ROADWAY AND DRAINAGE PILOT PROJECT (KEY LARGO AND BIG PINE KEY)
MONROE COUNTY - DEPARTMENT OF ENGINEERING

INJECTION WELL PLAN & PROFILE

SHEET NO. PS-12B

THE OFFICIAL RECORD OF THIS SHEET IS THE ELECTRONIC FILE DIGITALLY SIGNED AND SEALED UNDER RULE 61G15-23.004, F.A.C.

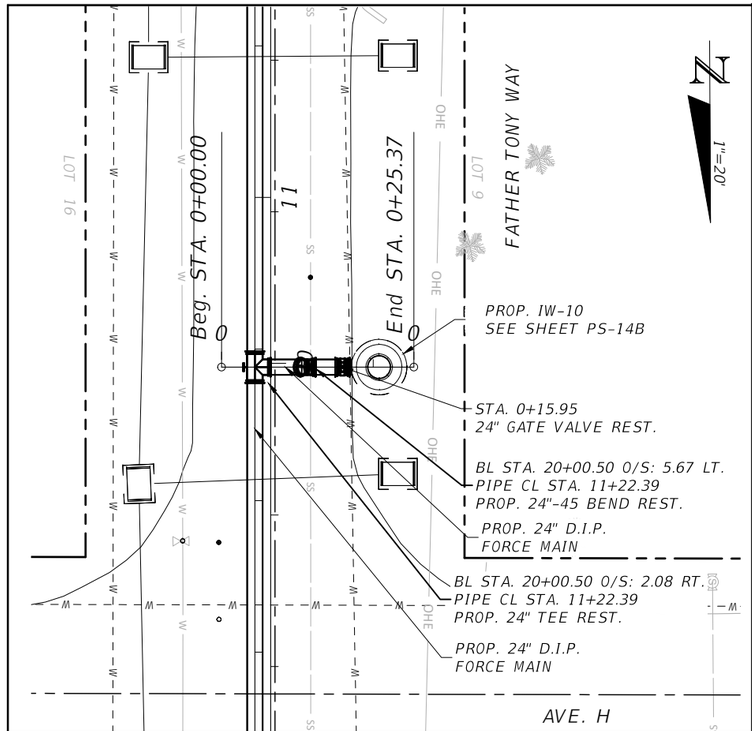

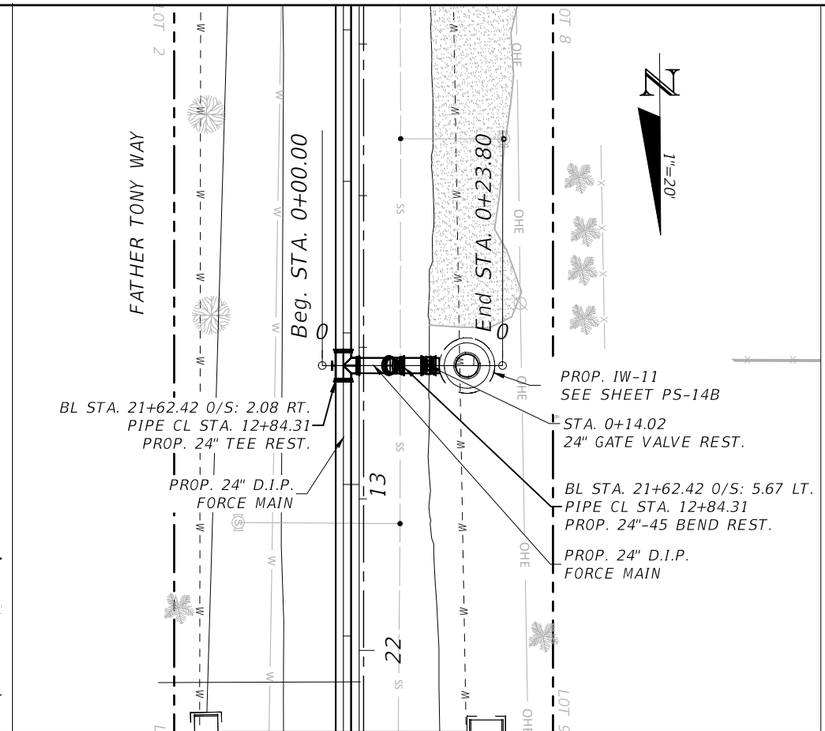

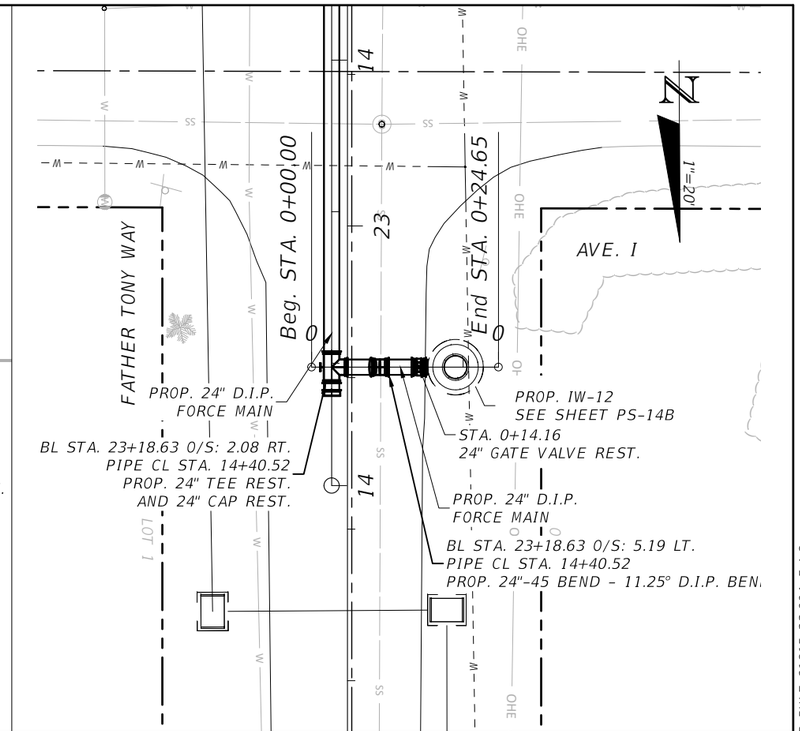

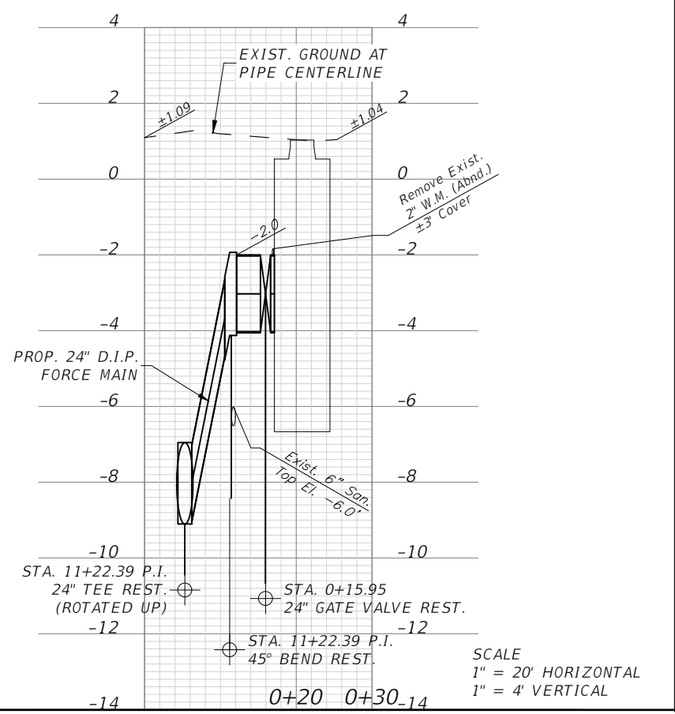

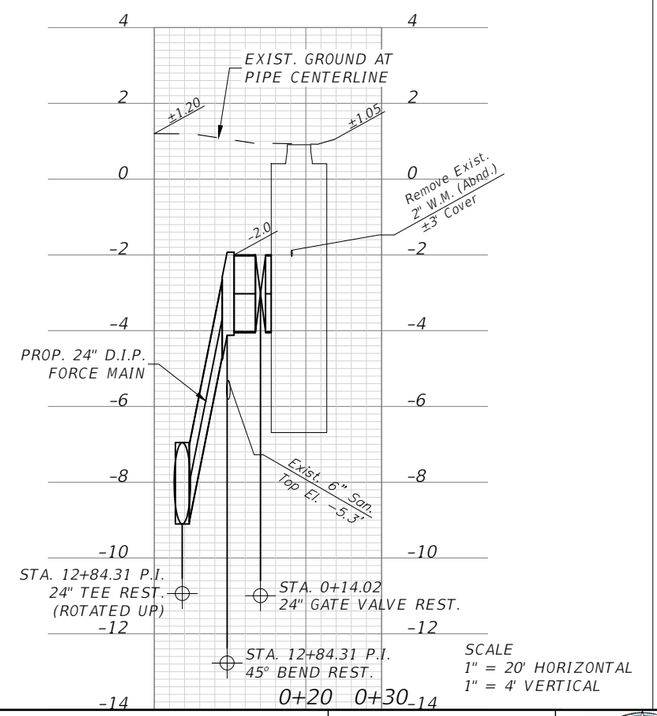

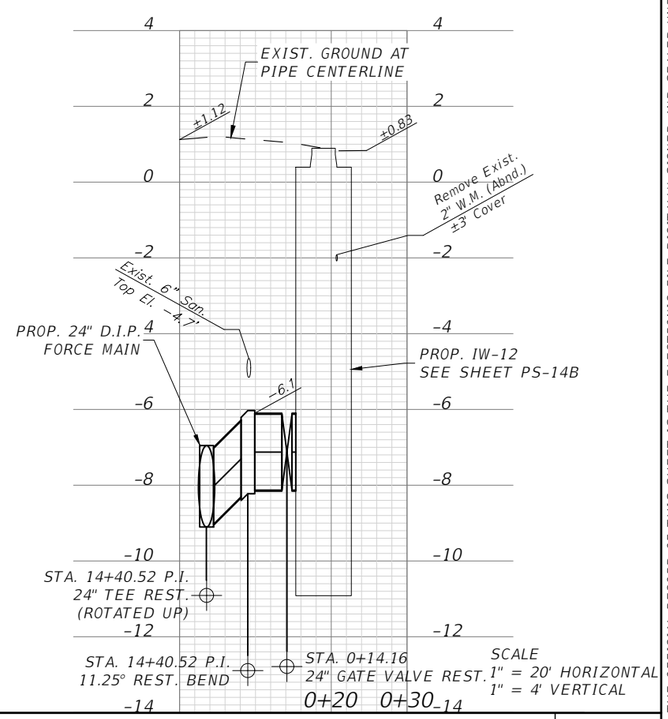

REVISIONS			
DATE	DESCRIPTION	DATE	DESCRIPTION

WERNER REINEFELD, P.E.
P.E. LICENSE NUMBER 63042
WSP USA, 7650 CORPORATE CENTER DRIVE,
SUITE 300, MIAMI, FLORIDA 33126
CERTIFICATE OF AUTHORIZATION 01462

SEA LEVEL RISE ROADWAY AND DRAINAGE PILOT PROJECT (KEY LARGO AND BIG PINE KEY)

MONROE COUNTY - DEPARTMENT OF ENGINEERING

INJECTION WELL PLAN & PROFILE

SHEET NO. PS-13B

THE OFFICIAL RECORD OF THIS SHEET IS THE ELECTRONIC FILE DIGITALLY SIGNED AND SEALED UNDER RULE 61G15-23.004, F.A.C.

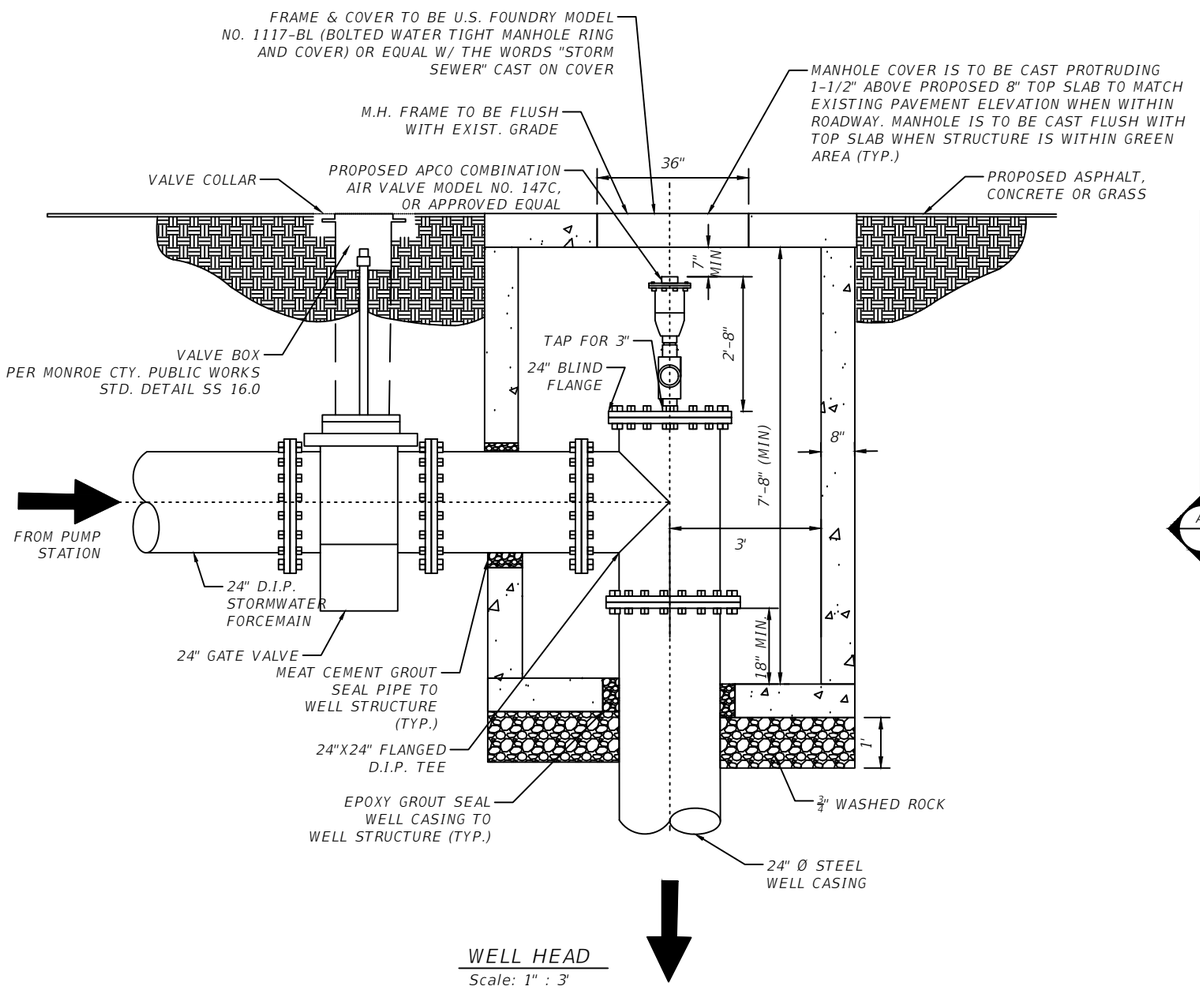

WELL HEAD

Scale: 1" : 3'

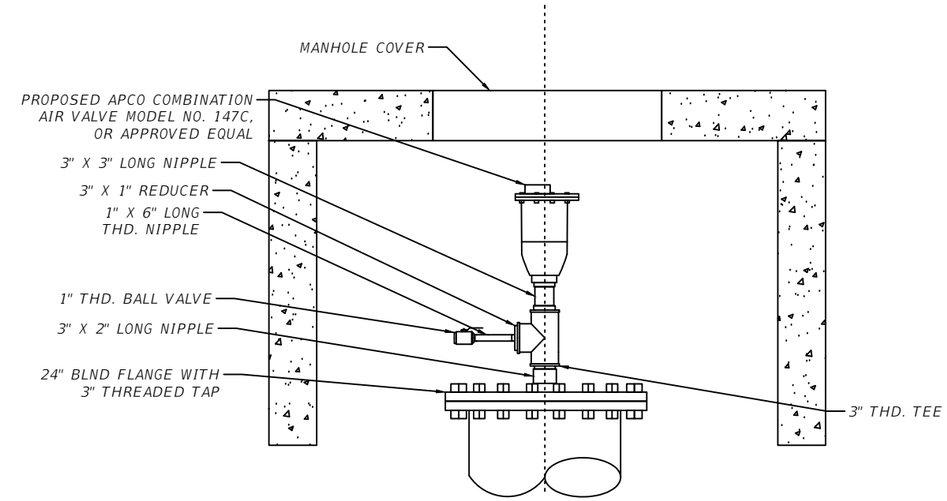

A PRESSURE SENSOR TREE

Scale: 1" : 2'

NOTES FOR DRAINAGE WELLS

1. CONTRACTOR SHALL OBTAIN DRAINAGE WELL PERMIT FROM FDEP INCLUDING SUPPORTING DOCUMENTATION.
2. WELL CAPACITY MUST BE 1000 GPM PER FOOT OF HEAD AS WELL AS AT MINIMUM WATER QUALITY OF 10.000 mg/L TDS PER 62-528.200, FAC. THE OPEN HOLE DEPTH MAY VARY AS NEEDED TO ACHIEVE STATED CAPACITY.
3. CONTRACTOR TO PROVIDE WELL CAPACITY REPORTS TO THE ENGINEER UPON THE COMPLETION OF EACH WELL PRIOR TO DRILLING THE NEXT WELL.
4. RECOMMENDED WELL CASING DEPTH IS 100 FEET.
5. IF CONTRACTOR CHOOSES TO DE-WATER TO WELLS DURING CONSTRUCTION, THEY SHALL BE RESPONSIBLE FOR RE-ESTABLISHING WELL TO ACHIEVE ORIGINAL CAPACITIES AT NO ADDITIONAL COST TO THE OWNER.
6. MANHOLE TYPE J-7 (6' DIA). SEE FDOT INDEX NO. 200 & 201 FOR ADDITIONAL DETAILS.

REVISIONS			
DATE	DESCRIPTION	DATE	DESCRIPTION

WERNER REINEFELD, P.E.
P.E. LICENSE NUMBER 63042
WSP USA, 7650 CORPORATE CENTER DRIVE, SUITE 300, MIAMI, FLORIDA 33126
CERTIFICATE OF AUTHORIZATION 01462

SEA LEVEL RISE ROADWAY AND DRAINAGE PILOT PROJECT (KEY LARGO AND BIG PINE KEY)

MONROE COUNTY - DEPARTMENT OF ENGINEERING

INJECTION WELL DETAIL

SHEET NO. PS-14B

NOTES

1. METALLIC THREADS TO BE COATED WITH BITUMASTIC COATING.
2. ON ARV'S FOR SEWARGE INSTALL 1" BLOW-OFF VALVE AND $\frac{1}{2}$" QUICK-DISCONNECT BACKFLUSHING CONNECTION WITH SHUT-OFF VALVE.
3. INSTALL TAPPING SADDLE FOR THICKNESS CLASS D.I. MAINS 4" & SMALLER, PRESSURE CLASS S.I. MAINS 8" & SMALLER, OR WHEN MAINS IS PVC, HEDPE, OR AC PIPE.

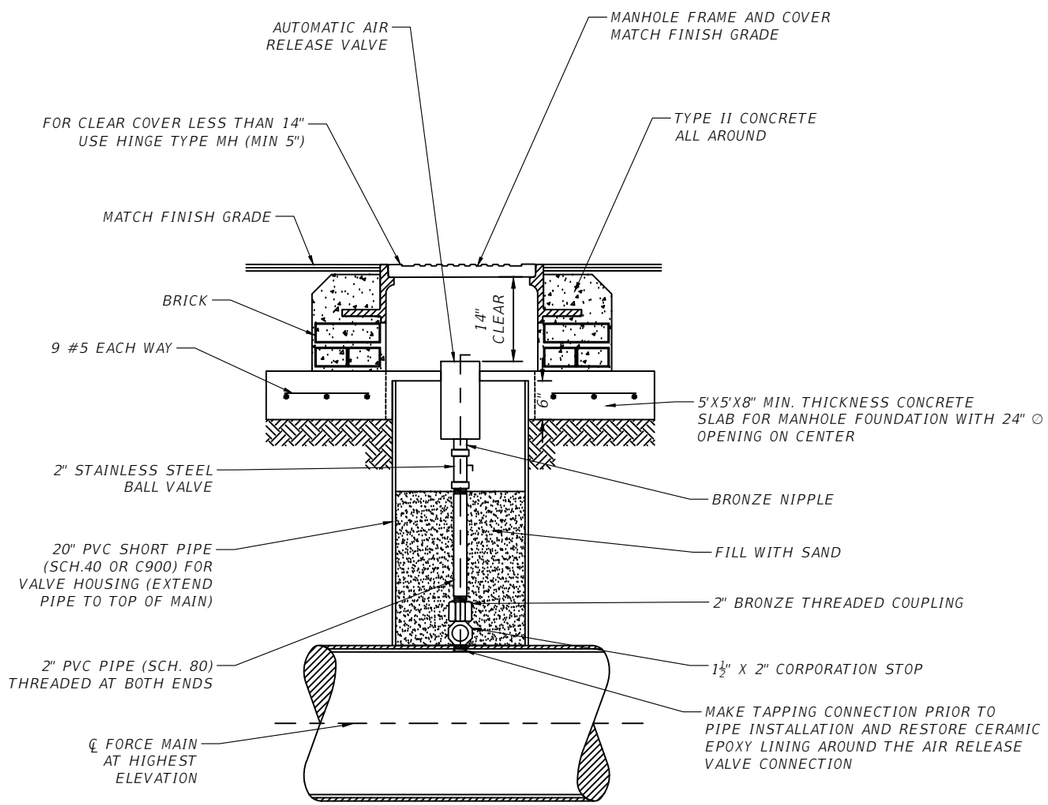

AUTOMATIC AIR RELEASE VALVE

Scale: 1" : 2'

REVISIONS			
DATE	DESCRIPTION	DATE	DESCRIPTION

WERNER REINEFELD, P.E.
P.E. LICENSE NUMBER 63042
WSP USA, 7650 CORPORATE CENTER DRIVE, SUITE 300, MIAMI, FLORIDA 33126
CERTIFICATE OF AUTHORIZATION 01462

SEA LEVEL RISE ROADWAY AND DRAINAGE PILOT PROJECT (KEY LARGO AND BIG PINE KEY)

MONROE COUNTY - DEPARTMENT OF ENGINEERING

A.A.R.V. DETAIL

SHEET NO. PS-15B

ELECTRICAL REQUIREMENTS

1.0 BASIC ELECTRICAL REQUIREMENTS

1.1 INSTALLATION

A. INSTALL EQUIPMENT AT THE LOCATIONS SHOWN ON THE DRAWINGS FOLLOWING THE MANUFACTURER'S RECOMMENDATIONS.

B. COORDINATE INSTALLATION OF UNDERGROUND DUCTS AND CONDUITS WITH EXISTING UNDERGROUND UTILITIES. FIELD VERIFY ROUTING AND BURIAL DEPTH. DRAIN DUCTS AWAY FROM BUILDINGS TOWARD MANHOLES. LOW POINTS IN DUCT BANK RUNS ARE NOT ACCEPTABLE.

2.0 RACEWAYS

2.1 LOCATION AND USE OF EACH TYPE OF CONDUIT AS FOLLOW:

A. USE RIGID CONDUIT FOR ABOVE GROUND EXPOSED INSTALLATIONS
EXCEPT IN CORROSIVE AREAS WHERE PVC COATED RIGID GALVANIZED STEEL SHALL BE USED.

B. USE GALVANIZED THREADED RIGID STEEL CONDUIT AS FOLLOWS:

1) WHEREVER SPECIFICALLY CALLED FOR ON DRAWINGS.
2) WHERE RACEWAY ELBOWS FROM SERVICE FEEDER STUB-UP.
3) FOR UNDERGROUND WORK BEYOND BUILDINGS WHERE CONCRETE ENCASED PLASTIC CONDUITS HAVE NOT BEEN SPECIFIED. COAT BURIED GALVANIZED STEEL CONDUITS AND FITTINGS WITH TWO COATS OF CARBOLINE'S BITUMASTIC NO. 50 OR EQUAL.

C. USE PLASTIC CONDUIT AS FOLLOWS:

1) WHEN INSTALLED IN POURED CONCRETE SLABS OR WALLS.
2) FOR UNDERGROUND WORK UNDER SLABS.
3) IN DUCT BANKS OR, IF SPECIFICALLY CALLED FOR, IN TRENCHES.
BACK-FILL TRENCHES WITH STRUCTURAL FILL 90% COMPACTED
(PROCTOR DENSITY) AND RESOD TO ORIGINAL CONDITION.

2.2 INSTALLATION

A. DRAWINGS ARE DIAGRAMMATIC AND DO NOT SHOW ALL BENDS, FITTINGS,BOXES, AND SPECIALTIES WHICH MAY BE REQUIRED OR THE EXACT LOCATION OF CONDUITS. EXAMINE THE STRUCTURAL AND FINISH CONDITIONS AFFECTING ALL OF THE WORK AND PLAN IT ACCORDINGLY, FURNISHING SUCH FITTINGS AS MAY BE REQUIRED TO MEET SUCH CONDITIONS. ARRANGE CONDUIT RUNS TO CLEAR BEAMS, PIPES AND OTHER OBSTRUCTIONS AND AVOID INTERFERENCES WITH OTHER TRADES WORK. ANY CHANGES FROM LOCATIONS SHOWN ON THE DRAWINGS MUST BE APPROVED BY THE ENGINEER.

B. INSTALL CONDUITS PASSING THROUGH WALLS AND SLABS IN PVC SLEEVES. EXTEND SLEEVES THROUGH FULL CONCRETE THICKNESS AND PROVIDE 1/2- INCH CLEARANCE AROUND CONDUITS TO FACILITATE SEALING.

C. SEAL ANY OPENING MADE IN SLABS OR WALLS TO PREVENT SMOKE OR FIRE SPREAD AND THE PASSAGE OF WATER. USE SEALING COMPOUND APPROVED FOR THE PURPOSE.

D. EXCEPT WHERE BOXES, PANELS AND OTHER EQUIPMENT HAVE THREADED OPENINGS, MAKE CONDUIT CONNECTIONS AS FOLLOWS:

1)DOUBLE LOCKNUTS, ONE INSIDE AND ONE OUTSIDE.
2)PROVIDE CONDUIT HUB IN NEMA 4X ENCLOSURE.
3)PLACE GROUNDING BUSHING ON END OF CONDUIT IN ADDITION TO LOCKNUTS.

3.0 IDENTIFICATION

A. COLOR CODE POWER CONDUCTORS AS FOLLOWS:

1) 120/208 VOLT SYSTEM: WHITE-NEUTRAL, BLACK-PHASE A, BLUE-PHASE B, RED-PHASE C.
2) 277/480 VOLT SYSTEM: GRAY-NEUTRAL, YELLOW-PHASE A, BROWN-PHASE B, ORANGE-PHASE C.
3) BONDING CONDUCTOR GREEN.

B. IDENTIFY FEEDERS, BRANCH CIRCUITS AND INSTRUMENTATION AND CONTROL WIRES AT TERMINATIONS, JUNCTION AND PULL BOXES.

4.0 GROUNDING

A. INSTALL GROUNDING AS SHOWN ON DRAWINGS. INSTALL IN COMPLIANCE WITH THE REQUIREMENTS OF THE NATIONAL ELECTRICAL CODE. DO NOT USE CONDUCTORS SMALLER THAN SIZE AWG #12.

B. CONNECTIONS SHALL BE MADE WITH THE EXOTHERMIC WELDING PROCESS USING EQUIPMENT MANUFACTURED ERICO PRODUCTS OR EQUAL.

C. ACCESSIBLE CONNECTIONS SHALL BE MADE WITH BURUNDY, MULTIPLE BOLT CONNECTORS SPECIFICALLY APPROVED FOR THE APPLICATION.

D. DO NOT EMBED GROUNDING CABLES DIRECTLY IN CONCRETE. USE SLEEVES WHEN PASSING CABLES THROUGH CONCRETE. BARE COPPER CABLES BURIED IN EARTH SHALL BE TINNED.

GENERAL ELECTRICAL NOTES

1. ALL WORK SHALL BE IN ACCORDANCE WITH THE FLORIDA BUILDING CODE AND ALL LOCAL ORDINANCES. INSTALLATION SHALL COMPLY WITH THE LATEST EDITION OF THE NATIONAL ELECTRIC CODE AND O.S.H.A. REGULATIONS.

2. ALL WORK SHALL BE PERFORMED BY A LICENSED ELECTRICAL CONTRACTOR IN A FIRST CLASS MANNER AND SHALL BE COMPLETED AND FULLY OPERATIVE TO THE ACCEPTANCE OF THE OWNER, GENERAL CONTRACTOR AND ENGINEER.

3. CONTRACTOR SHALL GUARANTEE ALL ELECTRICAL WORK, INCLUDING PARTS AN LABOR, FOR A PERIOD OF ONE (1) YEAR AFTER FINAL WRITTEN ACCEPTANCE BY OWNER AND ENGINEER.

4. CONTRACTOR SHALL PAY FOR ALL FEES, INSPECTIONS, TESTS, FINES, ETC., AS REQUIRED.

5. PRIOR TO COMMENCEMENT OF WORK, VERIFY MEASUREMENTS AT SITE. SUBMIT DISCREPANCIES AND DIFERENCES TO ENGINEER FOR CONSIDERATION AND DECISION BEFORE PROCEEDING.

6. VERIFY ALL DIMENSIONS PRIOR TO ANY FABRICATION OR INSTALLATION.

7. OBTAIN FULL INFORMATION REGARDING PECULIARITIES AND LIMITATIONS OF SPACE AVAILABLE FOR INSTALLATION OF THE EQUIPMENT AND MATERIALS UNDER CONTRACT, AND PROVIDE READY ACCESSIBILITY TO ELECTRICAL EQUIPMENT, INCLUDING ANY PART OF SYSTEM REQUIRED TO BE REACHED FOR MAINTENANCE AND OPERATIONS.

8. PROVIDE AN ACCURATE LAYOUT, GRADES AND ELEVATIONS; TAKE PROPER PRECAUTIONS TO PROTECT WORK AND EQUIPMENT FROM DAMAGE.

9. THE ELECTRICAL SERVICE INSTALLATION SHALL MEET ALL STANDARD REQUIREMENTS OF THE POWER COMPANY. CONTRACTOR SHALL COORDINATE SERVICE REQUIREMENTS WITH THE UTILITY COMPANY AND PROVIDE ACCORDINGLY. THE FPL CONTACT PERSON IS :
JOEL GARCIA (305) 215-1209

10. CONTRACTOR SHALL BE RESPONSIBLE FOR COORDINATION WITH OTHERS AS WELL AS PROVIDING TEMPORARY POWER.

11. ALL MATERIAL SHALL BE NEW AND OF AMERICAN MANUFACTURER AND BEAR THE UNDERWRITER'S LABORATORY AND UNION LABELS WHERE APPLICABLE. IT IS THE CONTRACTOR'S RESPONSIBILITY TO COORDINATE DELIVERY SCHEDULE OF MATERIAL.

12. ALL EQUIPMENT INSTALLED SHALL BE OF MANUFACTURER AND TYPE SPECIFIED. SUBMIT SHOP DRAWINGS AND PRODUCT DATA WITH ALL PERTINENT DATA AS SPECIFIED OR SCHEDULED. SUBMITTALS WITH INCOMPLETE INFORMATION WILL NOT BE REVIEWED UNTIL SUBMITTAL IS COMPLETE.

13. VERIFY EQUIPMENT SIZES, VOLTAGE AND CURRENT CHARACTERISTICS ETC., BEFORE ORDERING ANY EQUIPMENT AND PRIOR TO ROUGHING-IN FOR EQUIPMENT TO BE SUPPLIED BY OTHERS. NOTIFY ENGINEER OF ANY CONFLICTS.

14. ALL WIRING SHALL BE IN RACEWAY.

A. FOR EXTERIOR LOCATIONS RACEWAYS:
BELOW GRADE - SCHEDULE 40 PVC.
WITH 2'- 6" COVER (2'-6" FOR SERVICE).

B. SEALING FITTINGS SHALL BE INSTALLED AS SHOWN AND WHERE REQUIRED BY THE NEC.

15. CONTRACTOR SHALL COORDINATE THE PROPOSED CONTROL PANEL ENCLOSURES & THE REST OF ELECTRICAL DEVICES WITH THE CONCRETE PAD DIMENSIONS TO MATCH WITH FUTURE ARCHITECTURAL ENCLOSURE REQUESTED BY MIAMI BEACH PUBLIC WORK DEPARMENT.

15. CONTRACTOR SHALL COORDINATE THE PROPOSED CONTROL PANEL ENCLOSURES & THE REST OF ELECTRICAL DEVICES WITH THE CONCRETE PAD DIMENSIONS TO MATCH WITH FUTURE ARCHITECTURAL ENCLOSURE REQUESTED BY MIAMI BEACH PUBLIC WORK DEPARMENT.

16. ALL CIRCUITS TO CARRY A FULL GROUND WIRE PER N.E.C. ARTICLE 250.

17. MINIMUM SHORT CIRCUIT RATING (SCR) OF THE ELECTRICAL PANEL SHALL BE 65 kA MIN. PANEL (SCR) BE NEXT STANDARD VALUE ABOVE THE ONE PROVIDED BY FPL AT TRANSFORMER SECONDARY.

18- PUMP CONTROL PANEL SHALL BE MANUFACTURED AND LABELED PER UL508.

19- SUPPORTS SHALL MEET ASCE 7-93 SECTION 6 WIND LOADS.

20- WET WELL IS A CLASS I DIVISION I GROUP D ENVIRONMENT (PER NFPA 820-TABLE 4.2 ROW 16a) AS SUCH, ANY ELECTRICAL EQUIPMENT WITH IT IS RATED FOR CLASS 1, DIVISION I, GROUP D (A PRIMARY EXAMPLE ARE THE PUMP ELECTRIC MOTOR, RATED FOR CLASS 1, DIVISION 1, GROUP D). THE PUMP MOTOR CONNECTION AND CONTROL JUNCTION BOXES ARE NOT A CLASSIFIED ENVIRONMENT, HOWEVER IT HAS SEAL FITTINGS RATED FOR CLASS 1, DIVISION I,GROUP D ENVIRONMENTS INSTALLED ON CONDUITS BETWEEN IT AND THE WET WELL..

21- MAIN DISCONNECT SWITCH SIZED TO MATCH MAIN CIRCUIT BREAKER AND IN A PAD LOCKABLE SERVICE RATED,NEMA 4X & 16 316 STAINLESS STEEL ENCLOSURE. TOP SHALL NOT BE HIGHER THAN THE TOP OF THE CABINET.

22- CONTROL PANEL ENCLOSURES SHALL INCORPORATE A TAMPER/INTRUSION SWITCH (DC) THAT ACTIVATES AN ALARM TO THE RTU WHENEVER THE PANELS OPENED.

23- MAXIMUM GROUND RESISTANCE SHALL NOT EXCEED 25 OHMS PER ELECTRODE. SEE NEC 250.56.

THE OFFICIAL RECORD OF THIS SHEET IS THE ELECTRONIC FILE DIGITALLY SIGNED AND SEALED UNDER RULE 61G15-23.004, F.A.C.

REVISIONS			
DATE	DESCRIPTION	DATE	DESCRIPTION

A&P Consulting Transportation Engineers Corp.
8935 N.W. 35th Lane, Suite 200
Miami, FL 33172
(305) 592-7283 / fax: (305) 593-1594
CA No. : EB-0007797
Eduardo L. Martinez, P.E. No. 52023

SEA LEVEL RISE ROADWAY AND DRAINAGE PILOT PROJECT (KEY LARGO AND BIG PINE KEY)
MONROE COUNTY - DEPARTMENT OF ENGINEERING

GENERAL ELECTRICAL NOTES AND ELECTRICAL REQUIREMENTS

SHEET NO.
E-1B

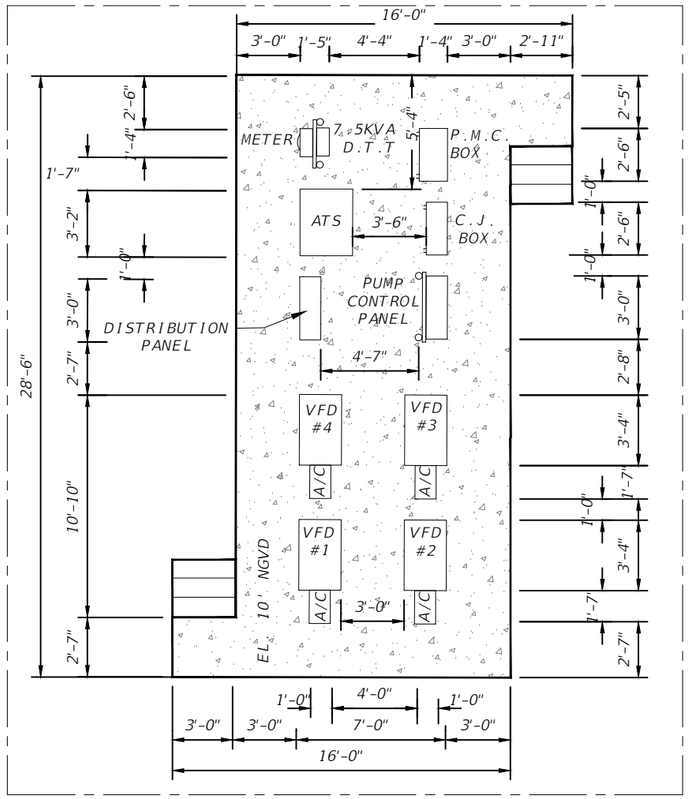

CONTROL PANEL ENLARGEMENT

SCALE: NTS

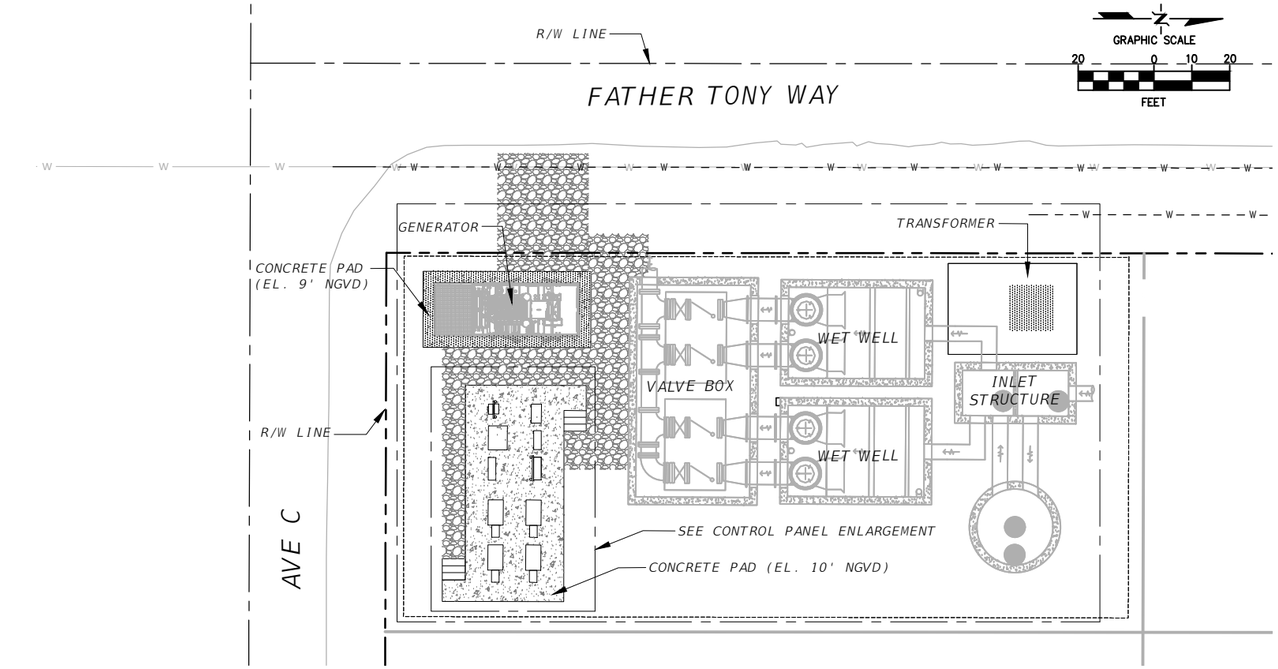

BIG PINE KEY PROPOSED ELECTRICAL SITE PLAN

SCALE 1"=20'

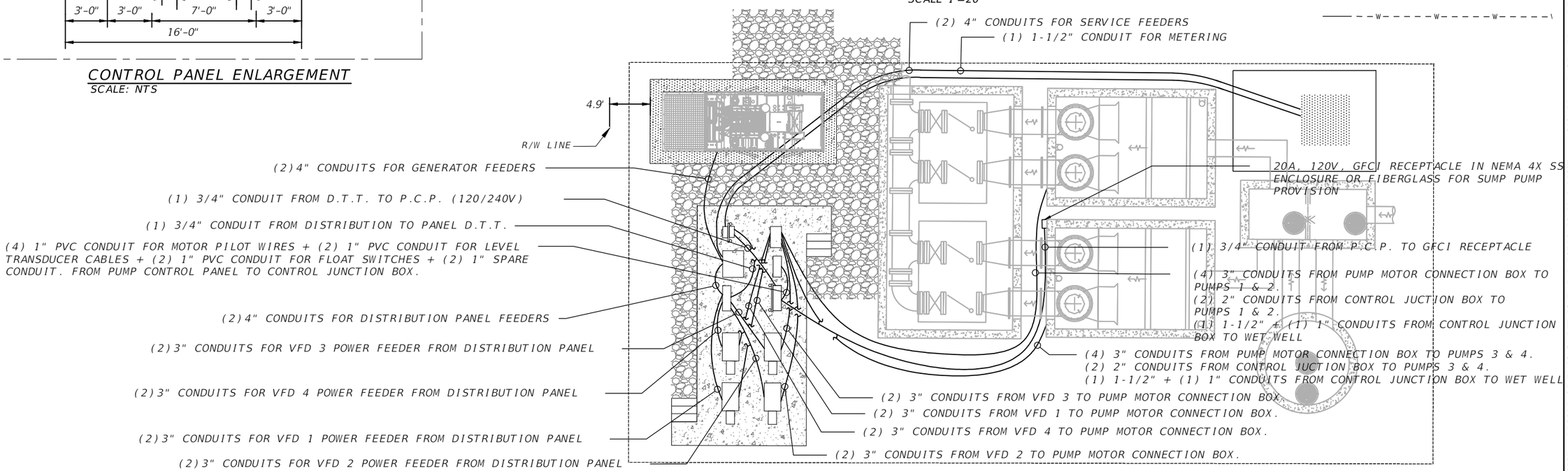

ELECTRICAL WIRING ENLARGEMENT

NTS

THE OFFICIAL RECORD OF THIS SHEET IS THE ELECTRONIC FILE DIGITALLY SIGNED AND SEALED UNDER RULE 61G15-23.004, F.A.C.

REVISIONS			
DATE	DESCRIPTION	DATE	DESCRIPTION

A&P Consulting Transportation Engineers Corp.
8935 N.W. 35th Lane, Suite 200
Miami, FL 33172
(305) 592-7283 / fax: (305) 593-1594
CA No. : EB-0007797
Eduardo L. Martinez, P.E. No. 52023

wsp

MONROE COUNTY 1823

SEA LEVEL RISE ROADWAY AND DRAINAGE PILOT PROJECT (KEY LARGO AND BIG PINE KEY)

MONROE COUNTY - DEPARTMENT OF ENGINEERING

PROPOSED ELECTRICAL SITE PLAN

SHEET NO. E-2B

EMERGENCY OPERATION ELECTRICAL LOAD CALCULATION

(4)135HP,LOW SPEED = 688A
PUMP MOTOR(4X172A)
MISCELLANEOUS LOAD = 16A
(VIA 7.5KVA D.T.T.)
25% OF LARGEST MOTOR = 43A
TOTAL = 747A

NORMAL OPERATION ELECTRICAL LOAD CALCULATION

(4)135HP,LOW SPEED = 688A
PUMP MOTOR(4X172A)
MISCELLANEOUS LOAD = 16A
(VIA 7.5KVA D. TT)
25% OF LARGEST MOTOR = 43A
TOTAL = 747A

NOTES:

1.- CONTRACTOR TO PROVIDE CONTROL PANEL SHOP DRAWINGS SHOWING WIRING DIAGRAM WITH ALL POWER AND CONTROL INTERCONNECTIONS.

2.- PROVIDE SHOP DRAWING FOR ALL DEVICES AND ELECTRICAL MATERIALS.

3.- SEAL FITTING SHALL COMPLY WITH NEC. 501 FOR CLASS I, DIVISION I LOCATIONS.

4.-EQUIPMENT MANUFACTURER SHALL SUPPLY A MINIMUM OF 100' PER EACH PUMP MOTOR & PILOT CABLES AND LEVEL TRANSDUCER & LEVEL SWITCH CABLES.

5.-EMERGENCY GENERATOR AND MANUAL TRANSFER SWITCH ARE NOT A SEPARATELY DERIVED SYSTEM.

6.-VFD ENCLOSURE SHALL BE 316SS WITH AN INCORPORATED HVAC UNIT.

7.-CONTRACTOR TO ADJUST THE VFD CIRCUIT BREAKER TRIP AS PER VFD MANUFACTURER RECOMMENDATIONS.

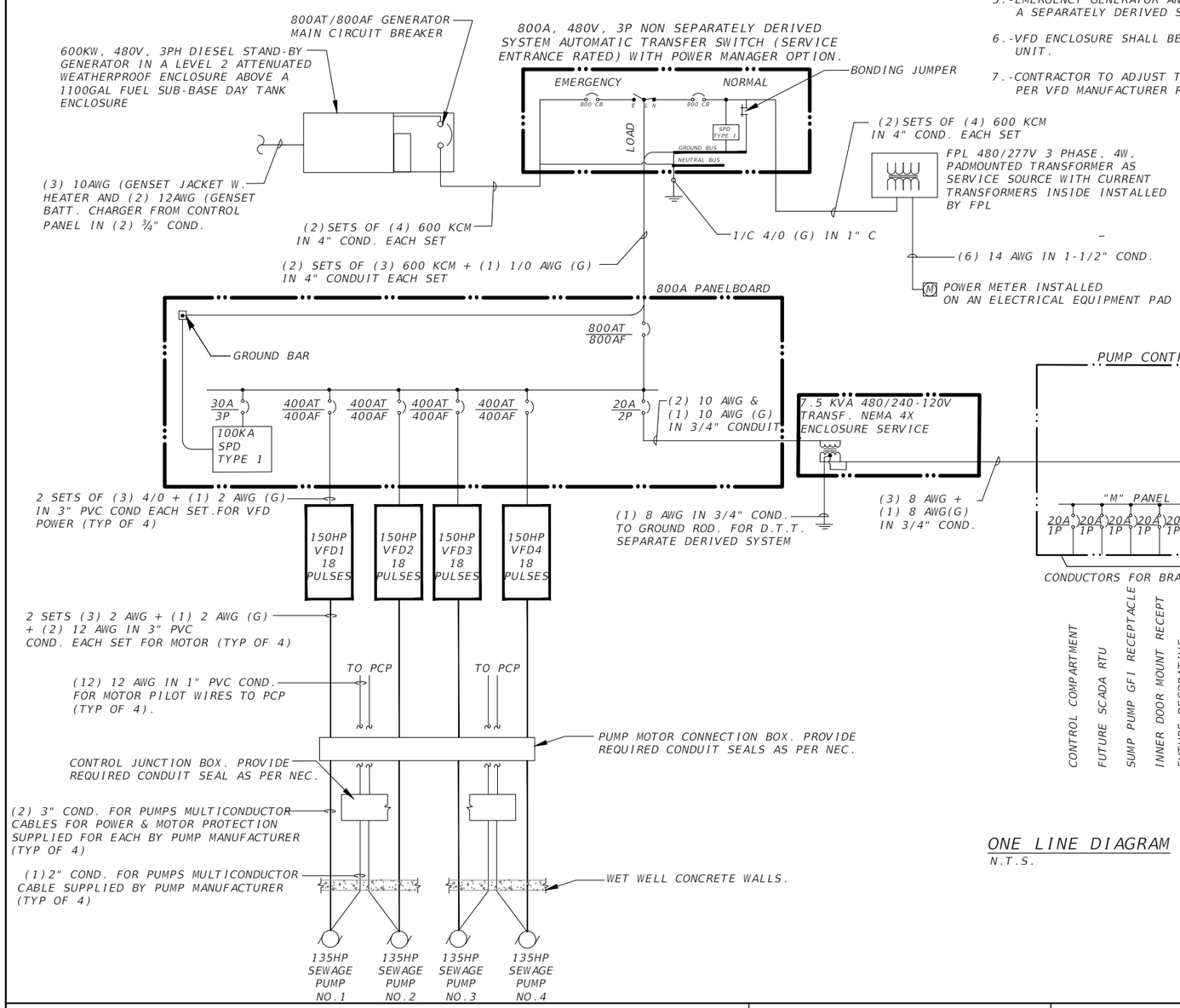

ONE LINE DIAGRAM

N.T.S.

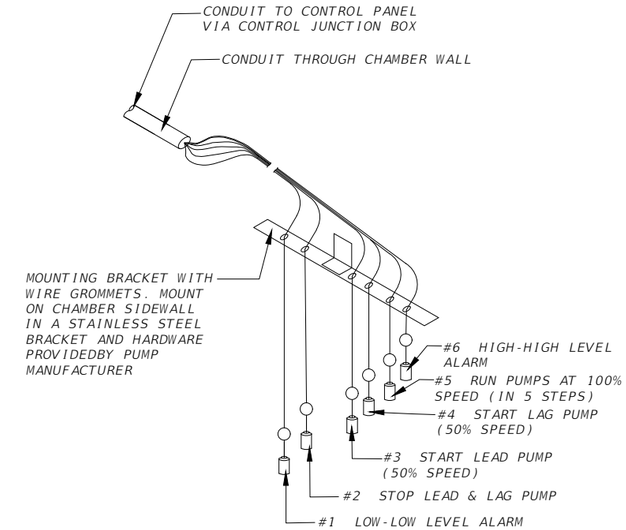

FLOAT LEVEL SWITCHES AT WET WELL# 1&2

NOTES:
1-(6)FLOAT LEVEL SWITCHES SHALL BE INSTALLED AT EACH WET WELL. FLOAT LEVEL SWITCHES WILL BE USED AS A BACK-UP OPERATION
3-FOR FLOAT LEVEL SWITCH ELEVATIONS INSIDE THE WET WELL REFER TO PS-05

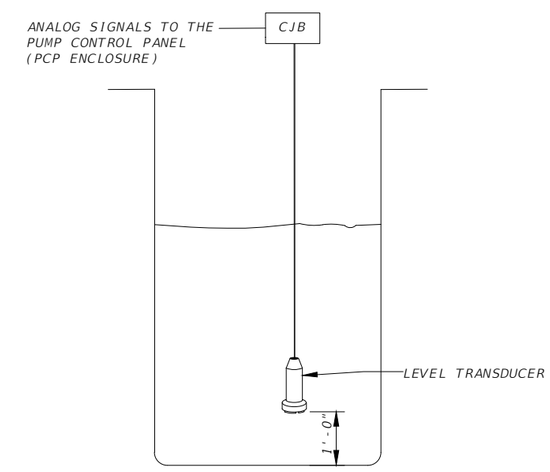

NOTE: SEE MECHANICAL DRAWINGS FOR PROPOSED ELEVATIONS

SENSING DEVICE AT WET WELL # 1&2

N.T.S.

THE OFFICIAL RECORD OF THIS SHEET IS THE ELECTRONIC FILE DIGITALLY SIGNED AND SEALED UNDER RULE 61G15-23.004, F.A.C.

REVISIONS			
DATE	DESCRIPTION	DATE	DESCRIPTION

A&P Consulting Transportation Engineers Corp.
8935 N.W. 35th Lane, Suite 200
Miami, FL 33172
(305) 592-7283 / fax: (305) 593-1594
CA No. : EB-0007797
Eduardo L. Martinez, P.E. No. 52023

SEA LEVEL RISE ROADWAY AND DRAINAGE PILOT PROJECT (KEY LARGO AND BIG PINE KEY)
MONROE COUNTY - DEPARTMENT OF ENGINEERING

ONE LINE DIAGRAM

SHEET NO. E-3B

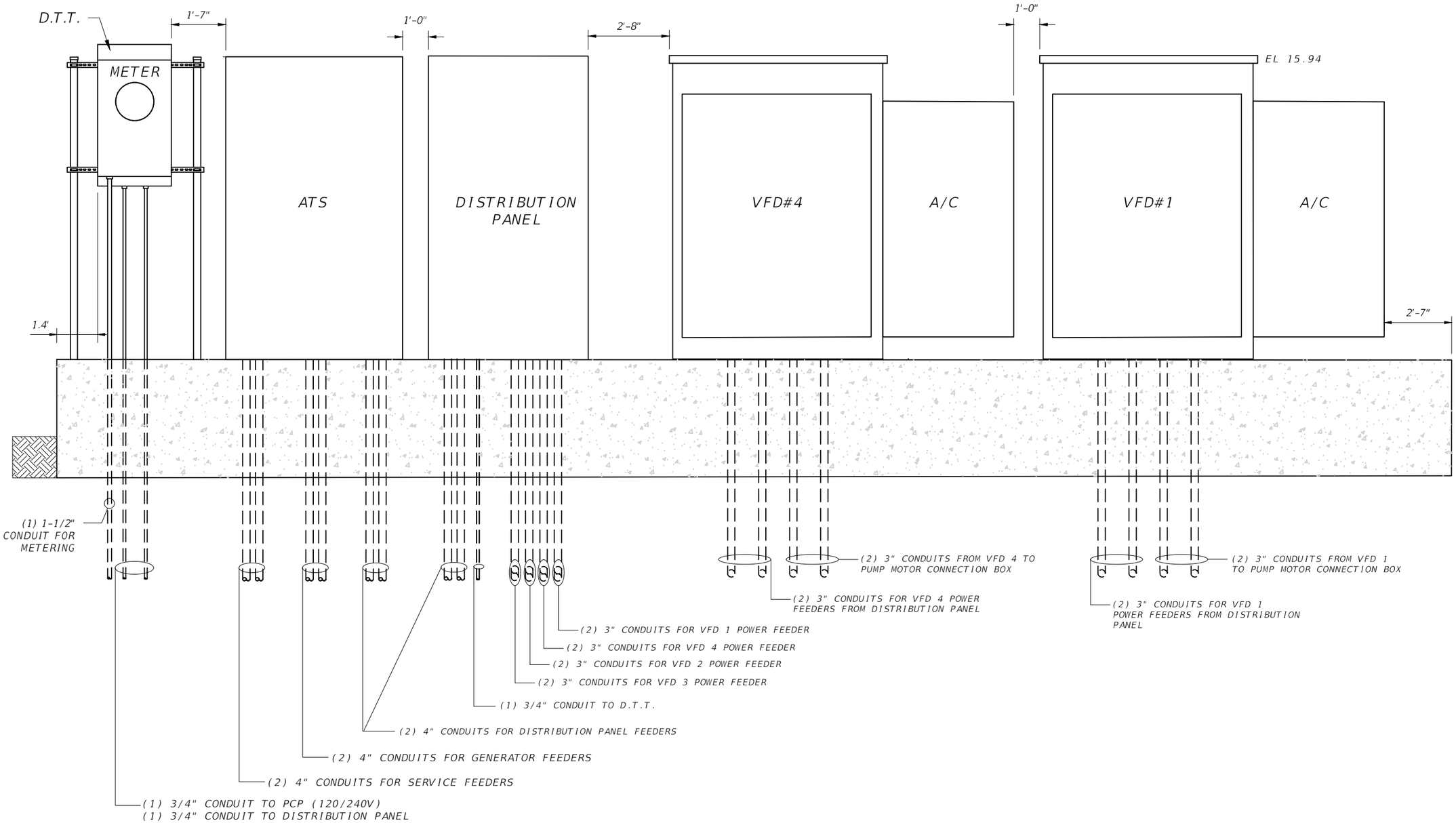

NOTE:
-CONTRACTOR SHALL COORDINATE WITH CONTROL PANEL MANUFACTURER TO VERIFY IF IS REQUIRED TO INSTALL ADDITIONAL VERTICAL STRUCTURAL SUPPORTS IN BETWEEN CONTROL PANEL ENCLOSURES TO COMPLY WITH THE 180 MPH WIND LOAD.

PUMP CONTROL PANEL (NORTH VIEW)

N.T.S.

REVISIONS			
DATE	DESCRIPTION	DATE	DESCRIPTION

A&P Consulting Transportation Engineers Corp.
8935 N.W. 35th Lane, Suite 200
Miami, FL 33172
(305) 592-7283 / fax: (305) 593-1594
CA No. : EB-0007797
Eduardo L. Martinez, P.E. No. 52023

SEA LEVEL RISE ROADWAY AND DRAINAGE PILOT PROJECT (KEY LARGO AND BIG PINE KEY)
MONROE COUNTY - DEPARTMENT OF ENGINEERING

PUMP CONTROL PANEL

SHEET NO. E-4B

THE OFFICIAL RECORD OF THIS SHEET IS THE ELECTRONIC FILE DIGITALLY SIGNED AND SEALED UNDER RULE 61G15-23.004, F.A.C.

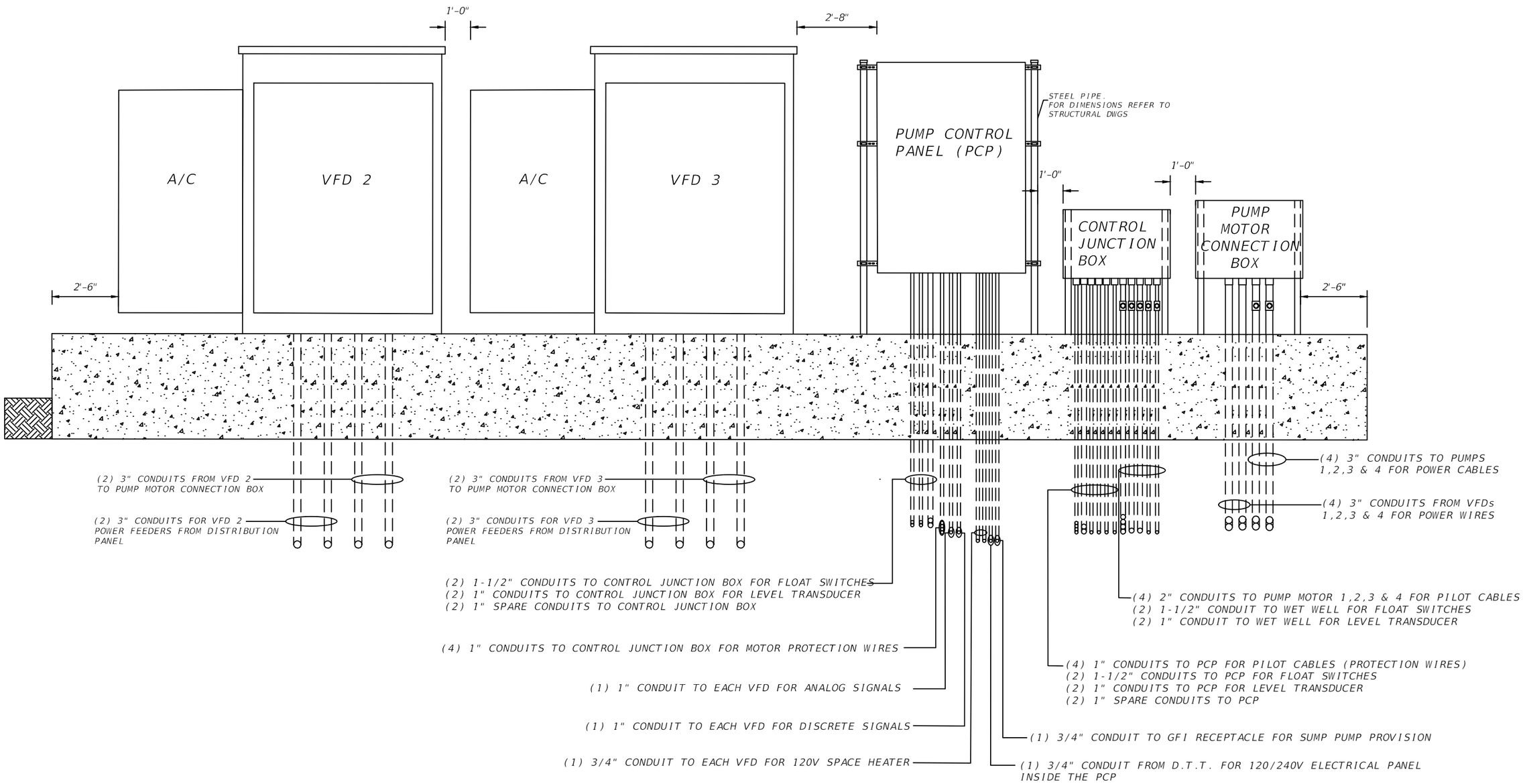

NOTE:
1-CONTRACTOR SHALL COORDINATE WITH CONTROL PANEL MANUFACTURER TO VERIFY IF IS REQUIRED TO INSTALL ADDITIONAL VERTICAL STRUCTURAL SUPPORTS BETWEEN ENCLOSURES TO COMPLY WITH THE 180 MPH WIND LOAD.

NTS

REVISIONS			
DATE	DESCRIPTION	DATE	DESCRIPTION

A&P Consulting Transportation Engineers Corp.
8935 N.W. 35th Lane, Suite 200
Miami, FL 33172
(305) 592-7283 / fax: (305) 593-1594
CA No. : EB-0007797
Eduardo L. Martinez, P.E. No. 52023

SEA LEVEL RISE ROADWAY AND DRAINAGE PILOT PROJECT (KEY LARGO AND BIG PINE KEY)
MONROE COUNTY - DEPARTMENT OF ENGINEERING

PUMP CONTROL PANEL

SHEET NO. E-5B

THE OFFICIAL RECORD OF THIS SHEET IS THE ELECTRONIC FILE DIGITALLY SIGNED AND SEALED UNDER RULE 61G15-23.004, F.A.C.

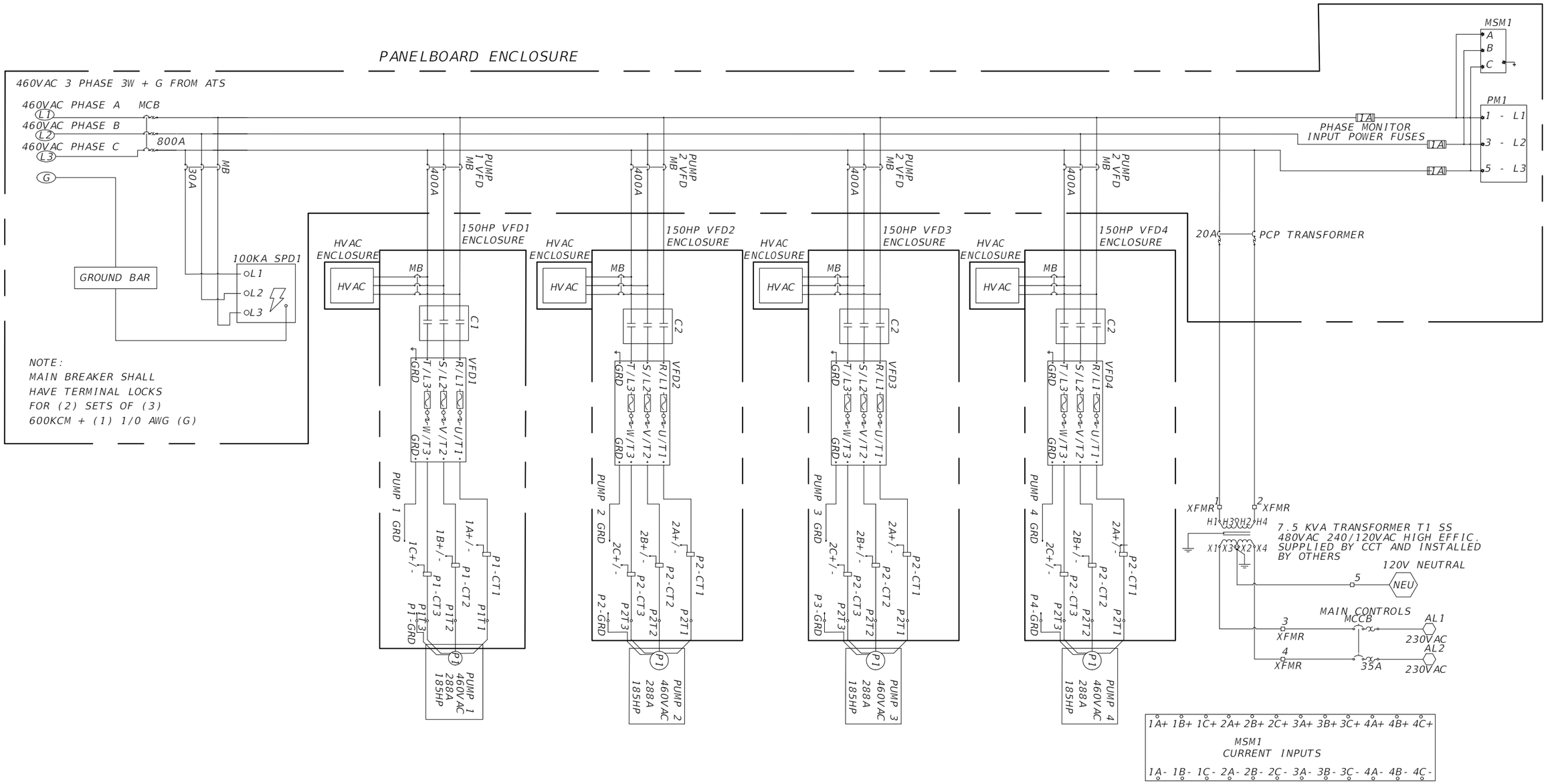

NOTE:
CONTROL SCHEMATIC INDICATES MINIMUM REQUIREMENTS AND IT SHALL BE REVISED AND SUPPLEMENTED BY MANUFACTURER TO PROVIDE ALL NECESSARY FEATURES FOR A COMPLETE WORKING MOTOR SYSTEM.

THE OFFICIAL RECORD OF THIS SHEET IS THE ELECTRONIC FILE DIGITALLY SIGNED AND SEALED UNDER RULE 61G15-23.004, F.A.C.

REVISIONS			
DATE	DESCRIPTION	DATE	DESCRIPTION

A&P Consulting Transportation Engineers Corp.
8935 N.W. 35th Lane, Suite 200
Miami, FL 33172
(305) 592-7283 / fax: (305) 593-1594
CA No. : EB-0007797
Eduardo L. Martinez, P.E. No. 52023

SEA LEVEL RISE ROADWAY AND DRAINAGE PILOT PROJECT (KEY LARGO AND BIG PINE KEY)
MONROE COUNTY - DEPARTMENT OF ENGINEERING

CONTROL PANEL ELECTRICAL SCHEMATIC (1)

SHEET NO.
E-6B

CONTROL & FUTURE SCADA RTU ENCLOSURE

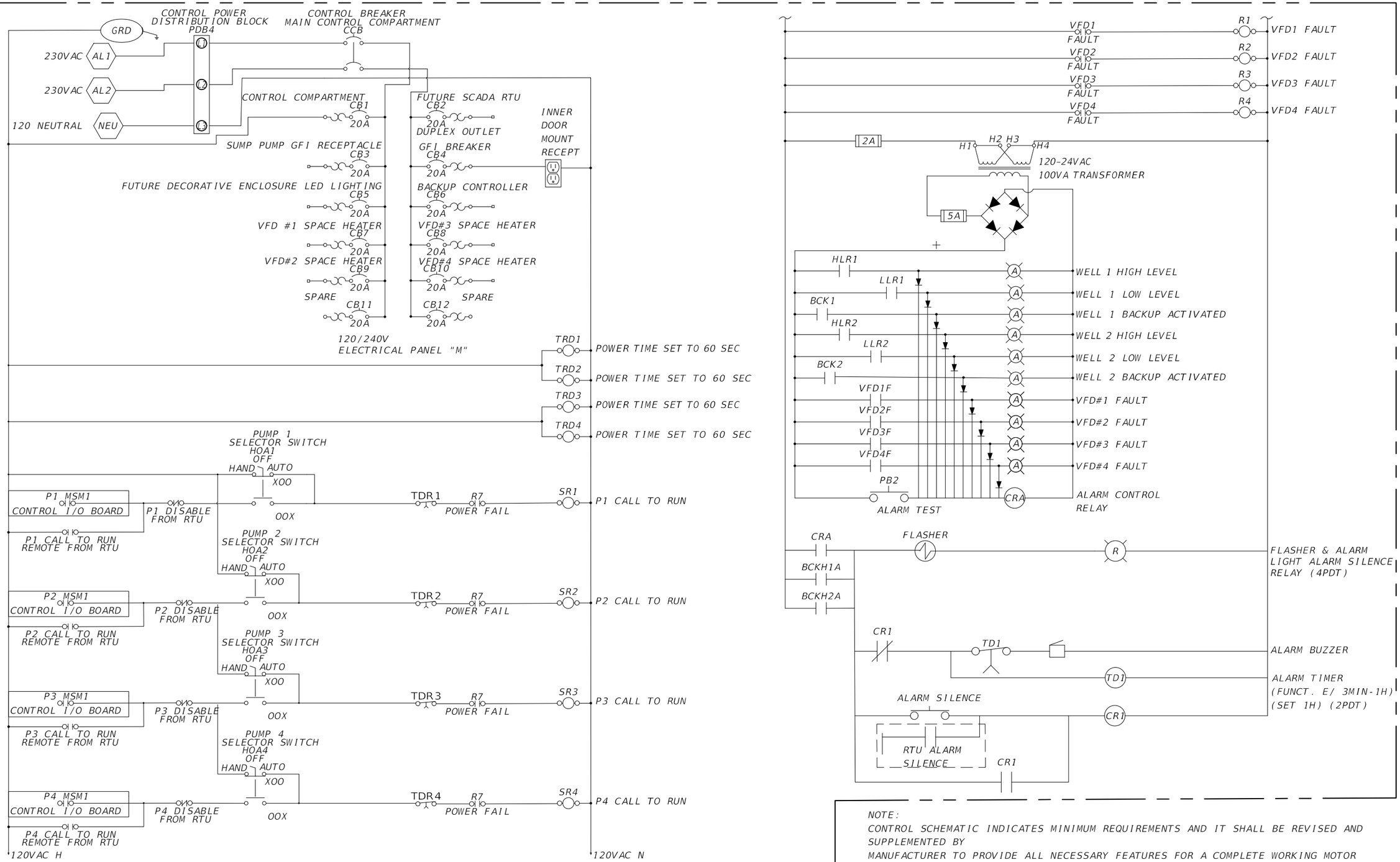

NOTE:
CONTROL SCHEMATIC INDICATES MINIMUM REQUIREMENTS AND IT SHALL BE REVISED AND SUPPLEMENTED BY
MANUFACTURER TO PROVIDE ALL NECESSARY FEATURES FOR A COMPLETE WORKING MOTOR SYSTEM.

THE OFFICIAL RECORD OF THIS SHEET IS THE ELECTRONIC FILE DIGITALLY SIGNED AND SEALED UNDER RULE 61G15-23.004, F.A.C.

REVISIONS			
DATE	DESCRIPTION	DATE	DESCRIPTION

A&P Consulting Transportation Engineers Corp.
8935 N.W. 35th Lane, Suite 200
Miami, FL 33172
(305) 592-7283 / fax: (305) 593-1594
CA No. : EB-0007797
Eduardo L. Martinez, P.E. No. 52023

wsp

SEA LEVEL RISE ROADWAY AND DRAINAGE PILOT PROJECT (KEY LARGO AND BIG PINE KEY)
MONROE COUNTY - DEPARTMENT OF ENGINEERING

CONTROL PANEL ELECTRICAL SCHEMATIC (2)

SHEET NO. E-7B

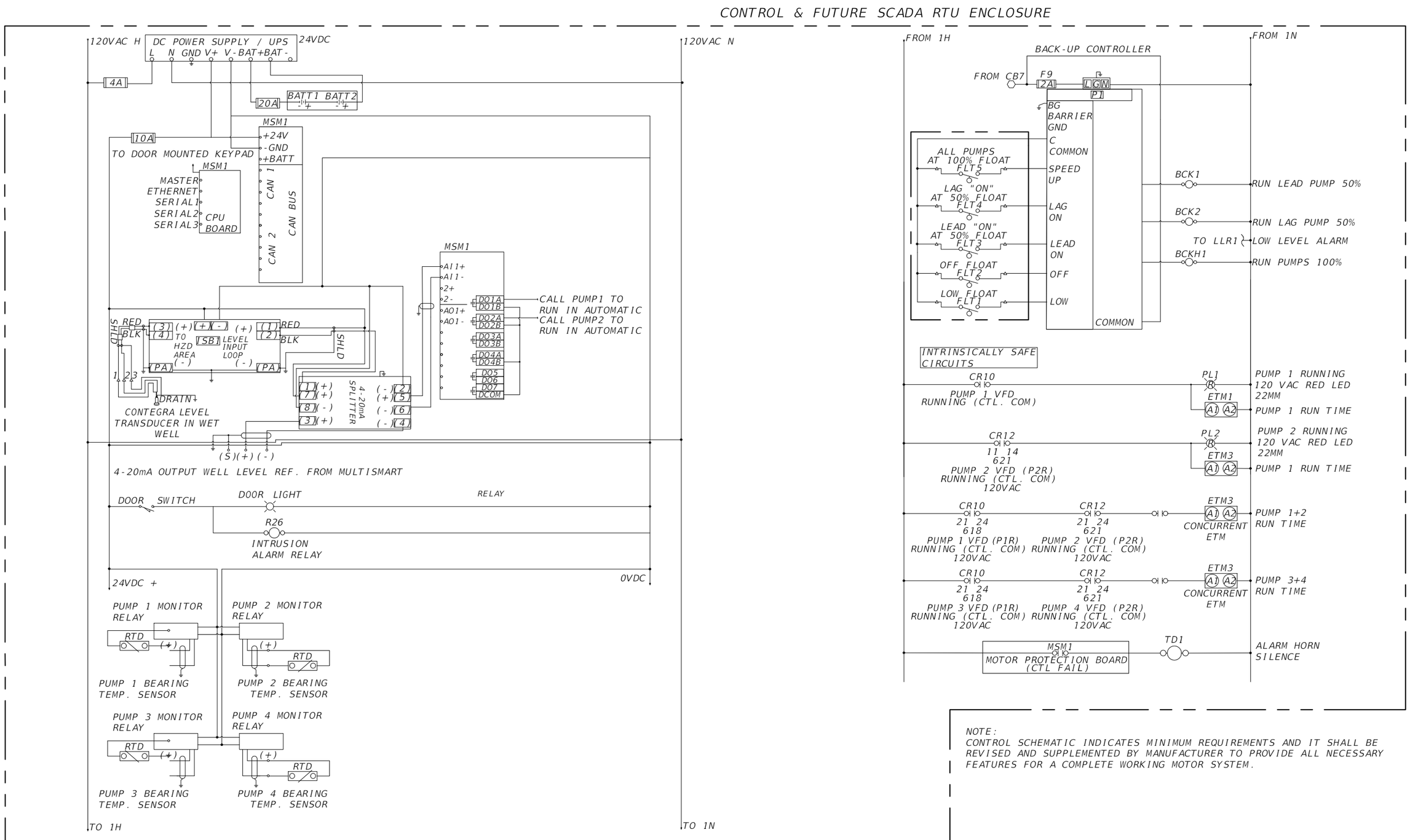

NOTE:
CONTROL SCHEMATIC INDICATES MINIMUM REQUIREMENTS AND IT SHALL BE REVISED AND SUPPLEMENTED BY MANUFACTURER TO PROVIDE ALL NECESSARY FEATURES FOR A COMPLETE WORKING MOTOR SYSTEM.

THE OFFICIAL RECORD OF THIS SHEET IS THE ELECTRONIC FILE DIGITALLY SIGNED AND SEALED UNDER RULE 61G15-23.004, F.A.C.

REVISIONS			
DATE	DESCRIPTION	DATE	DESCRIPTION

A&P Consulting Transportation Engineers Corp.
8935 N.W. 35th Lane, Suite 200
Miami, FL 33172
(305) 592-7283 / fax: (305) 593-1594
CA No. : EB-0007797
Eduardo L. Martinez, P.E. No. 52023

SEA LEVEL RISE ROADWAY AND DRAINAGE PILOT PROJECT (KEY LARGO AND BIG PINE KEY)
MONROE COUNTY - DEPARTMENT OF ENGINEERING

CONTROL PANEL ELECTRICAL SCHEMATIC (3)

SHEET NO. E-8B

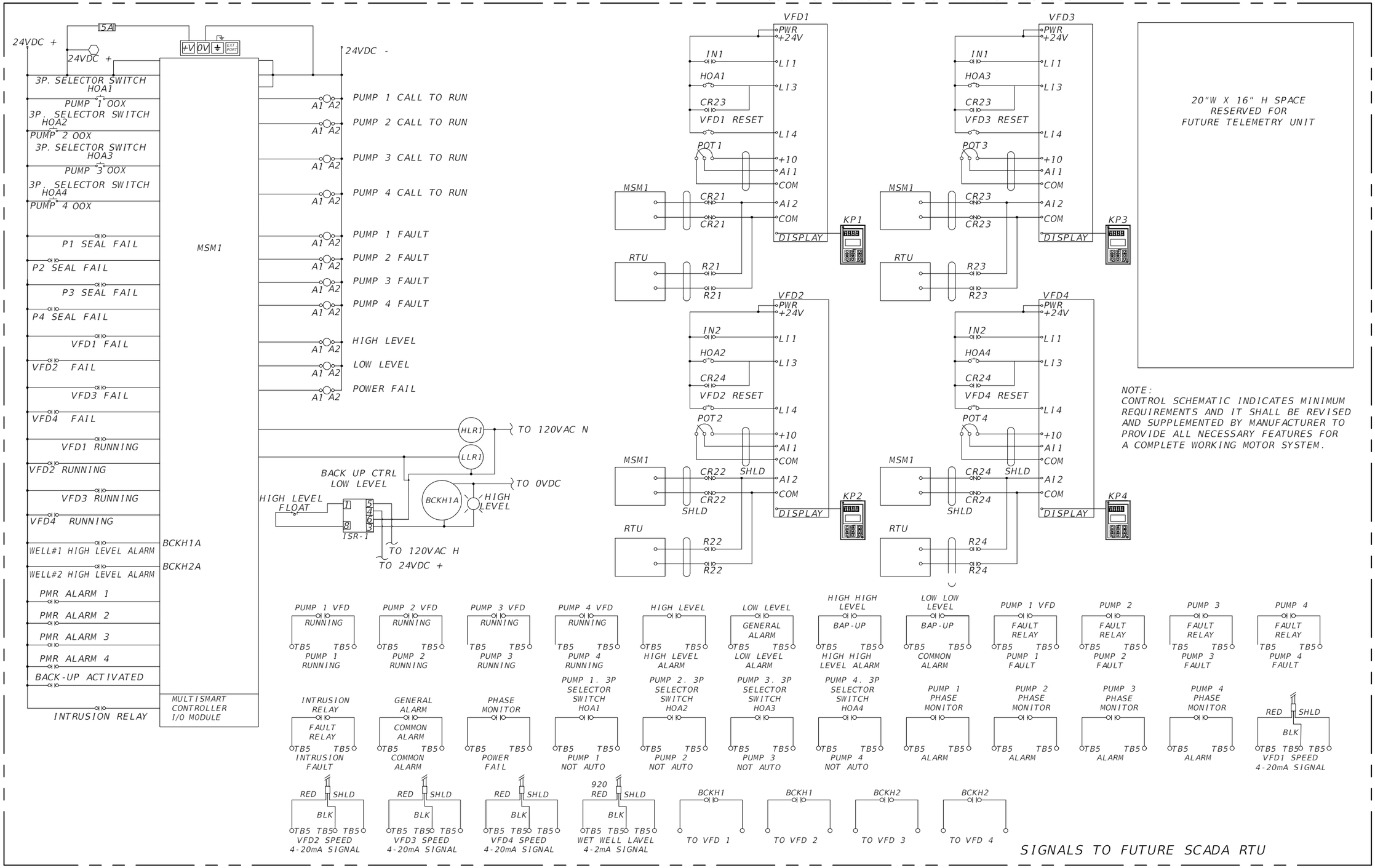

REVISIONS			
DATE	DESCRIPTION	DATE	DESCRIPTION

A&P Consulting Transportation Engineers Corp.
8935 N.W. 35th Lane, Suite 200
Miami, FL 33172
(305) 592-7283 / fax: (305) 593-1594
CA No. : EB-0007797
Eduardo L. Martinez, P.E. No. 52023

wsp

Evelin Ramos

SEA LEVEL RISE ROADWAY AND DRAINAGE PILOT PROJECT (KEY LARGO AND BIG PINE KEY)

MONROE COUNTY - DEPARTMENT OF ENGINEERING

CONTROL PANEL ELECTRICAL SCHEMATIC (4)

SHEET NO. E-9B

11/25/2019 4:51:19 PM P:\Monroe Co - Twin Lakes & Sands Community Proposal\CAD Files\Big Pine Key\2-Sheets\E-09B.dwg

THE OFFICIAL RECORD OF THIS SHEET IS THE ELECTRONIC FILE DIGITALLY SIGNED AND SEALED UNDER RULE 61G15-23.004, F.A.C.

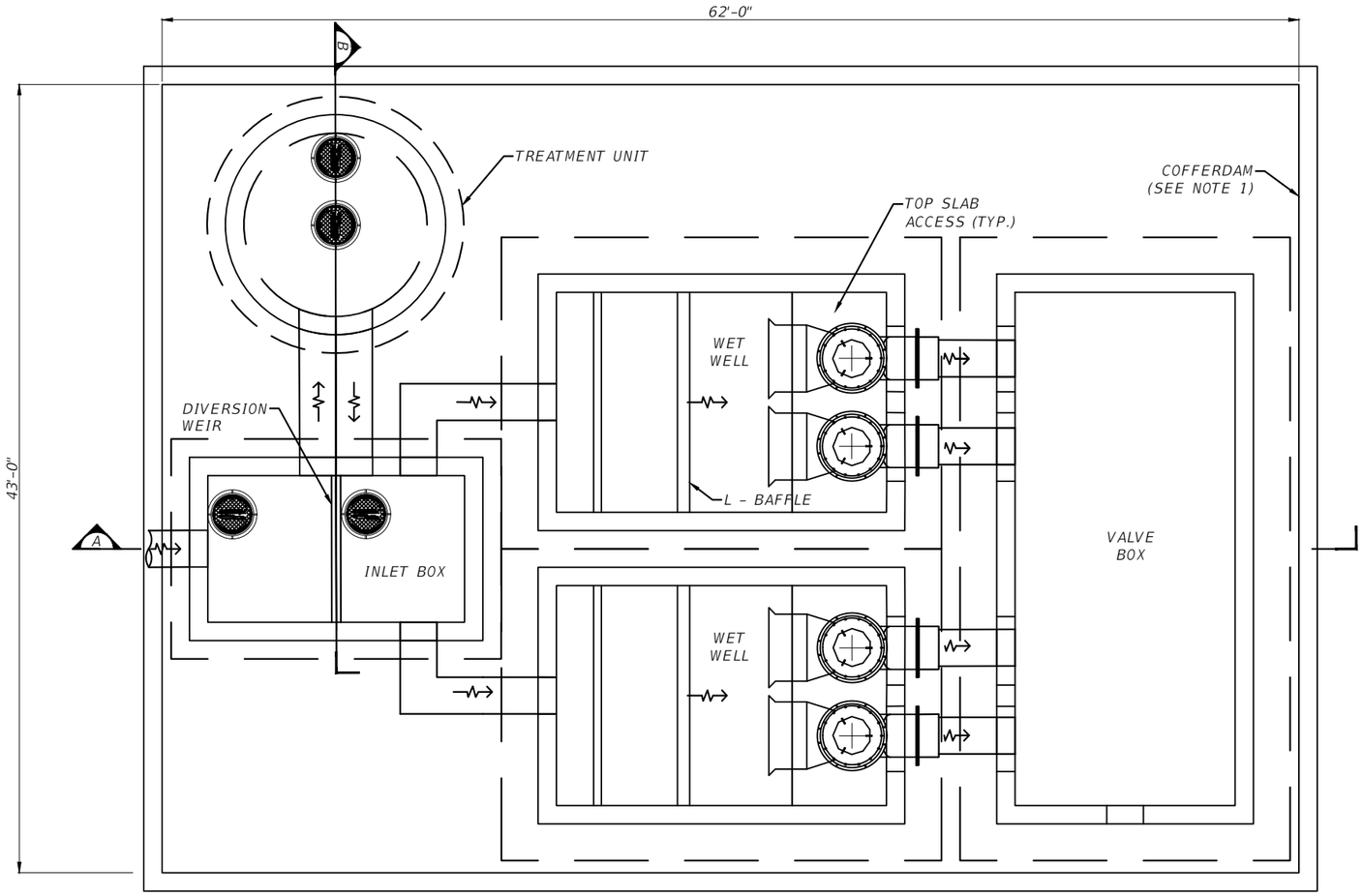

PUMP STATION LAYOUT
SCALE: $\frac{1}{8}$"=1'-0"

STRUCTURAL NOTES

1 - GENERAL NOTES

1.1 THE STRUCTURAL DRAWINGS COMPLY WITH THE APPLICABLE REQUIREMENTS OF THE FLORIDA BUILDING CODE, 2017 EDITION.

2 - CONCRETE

2.1 CONCRETE SHALL DEVELOP A MINIMUM COMPRESSIVE STRENGTH OF 5500 PSI AT 28 DAYS.

2.2 DESIGN OF CONCRETE COMPONENTS SHALL CONFORM TO ACI 318-14.

3 - REINFORCING STEEL

3.1 REINFORCING STEEL SHALL CONFORM TO ASTM A-615, GRADE 60

3.2 WELDED WIRE FABRIC SHALL CONFORM TO ASTM A-185.

3.3 FABRICATION AND DETAILING SHALL CONFORM TO ACI 315.

3.4 REINFORCEMENT COVER SHALL BE AS FOLLOWS UNLESS NOTED OTHERWISE:

CONCRETE CAST AGAINST THE GROUND: 3"
FORMED CONCRETE IN CONTACT WITH GROUND: 3"
FORMED OR PRECAST SLABS & WALLS: 2"

4 - DESIGN CRITERIA

4.1 LOADS:
- DEAD LOAD: BASED ON CONCRETE DENSITY OF 150 PCF.
- LIVE LOAD: HS20 WHEEL LOAD PER AASHTO SPECIFICATIONS.

4.2
- LIVE LOAD SURCHARGE: 240 PCF.
- BUOYANCY: BASED ON WATER DENSITY OF 62.4 PCF.
- WIND LOADS: IN ACCORDANCE WITH FBC 2017 AND ASCE 7-10, 175 MPH WIND SPEED, EXPOSURE 'C'.

5 - SHOP DRAWINGS

THE CONTRACTOR HAS THE OPTION TO CONSTRUCT A CAST-IN-PLACE OR PRECAST STRUCTURE, SHOP DRAWINGS SHALL BE SUBMITTED TO THE ENGINEER FOR APPROVAL. THE CONTRACTOR SHALL INDICATE ON THE SHOP DRAWINGS WHETHER THE STRUCTURE IS PRECAST OR CAST-IN-PLACE.

6 - COFFERDAM

THE CONTRACTOR SHALL SUBMIT DESIGN CALCULATIONS AND PLANS FOR THE COFFERDAM AND THE TREMIE SEAL. ALL CALCULATIONS AND PLANS SHALL BE SIGNED AND SEALED BY FLORIDA REGISTERED PROFESSIONAL ENGINEERS.

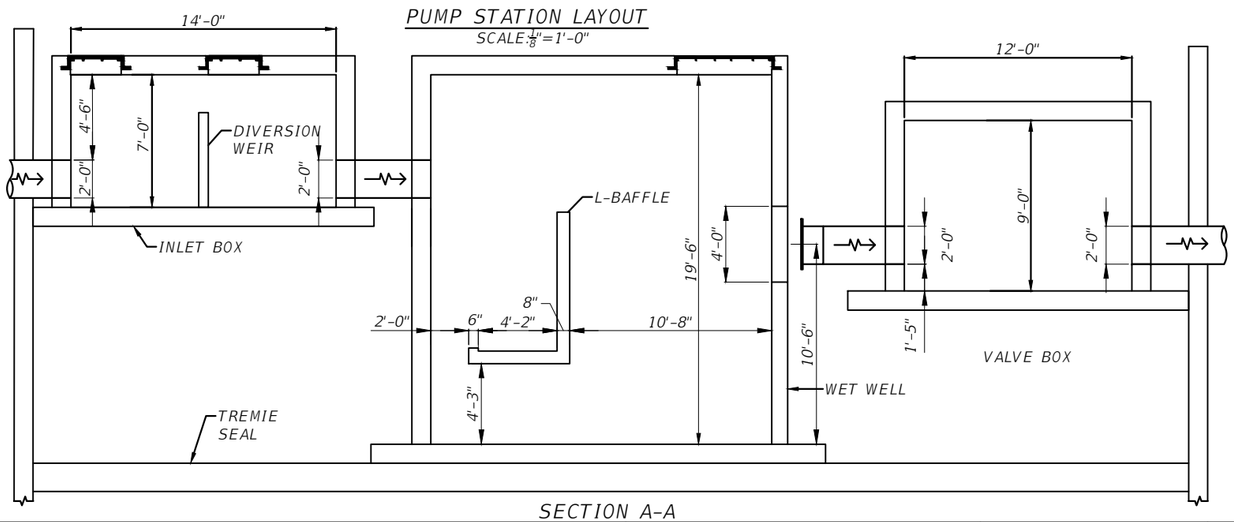

SECTION A-A

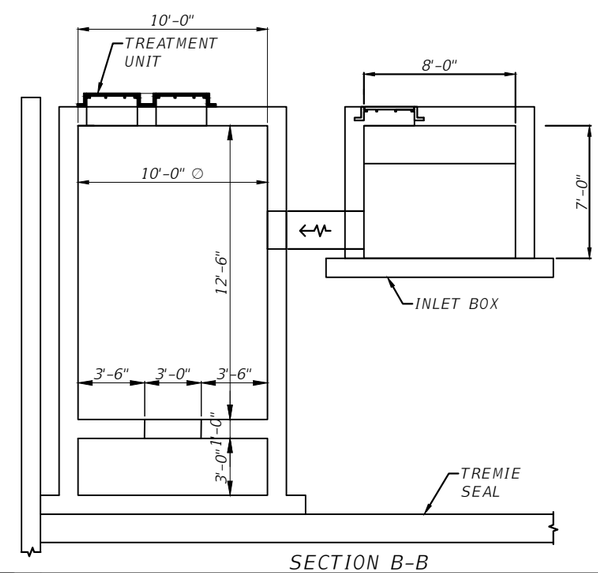

SECTION B-B

REVISIONS			
DATE	DESCRIPTION	DATE	DESCRIPTION

ROGER G KHOURI, P.E.
P.E. LICENSE NUMBER 47745
WSP USA, 7650 CORPORATE CENTER DRIVE,
SUITE 300, MIAMI, FLORIDA 33126
CERTIFICATE OF AUTHORIZATION 01462

SEA LEVEL RISE ROADWAY AND DRAINAGE PILOT PROJECT (KEY LARGO AND BIG PINE KEY)
MONROE COUNTY - DEPARTMENT OF ENGINEERING

BIG PINE PUMP STATION LAYOUT

SHEET NO. S-1B

THE OFFICIAL RECORD OF THIS SHEET IS THE ELECTRONIC FILE DIGITALLY SIGNED AND SEALED UNDER RULE 61G15-23.004, F.A.C.

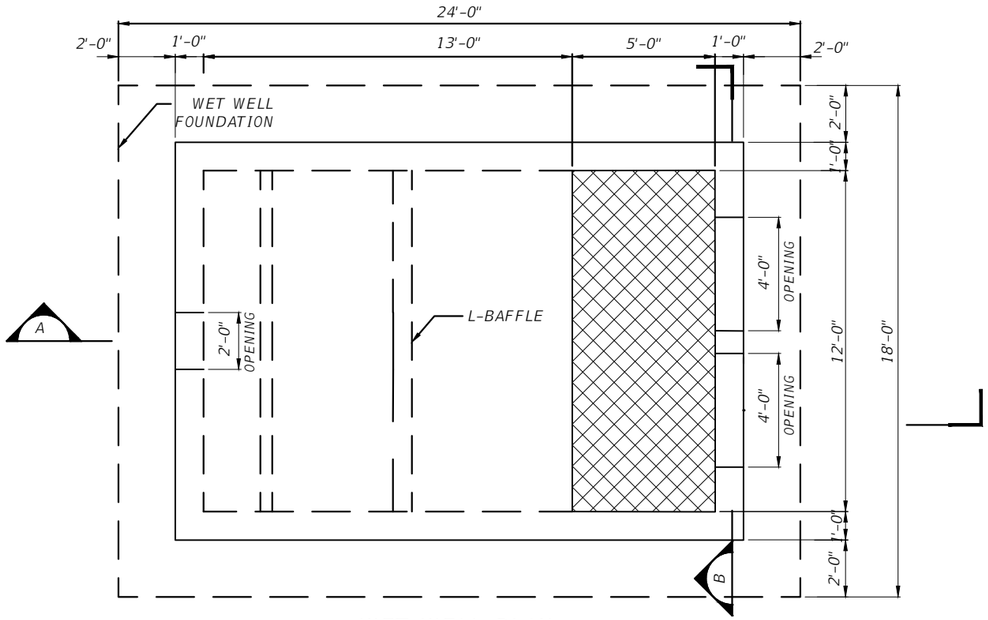

WET WELL-PLAN

SCALE: $\frac{3}{16}$"=1'-0"

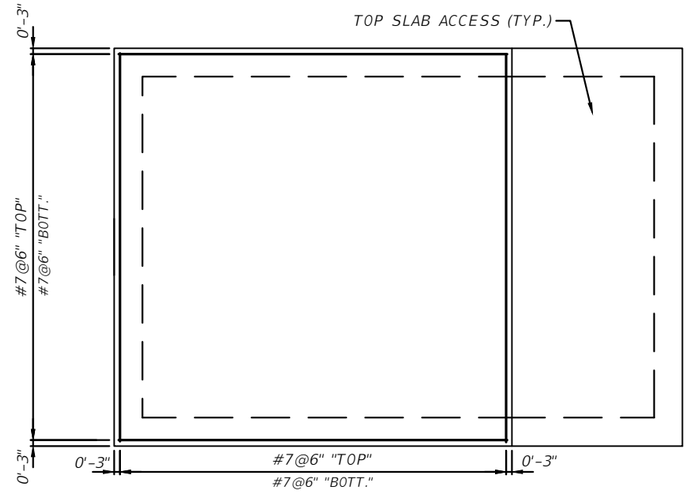

TOP SLAB REINFORCEMENT DETAIL

SCALE: $\frac{3}{16}$"=1'-0"

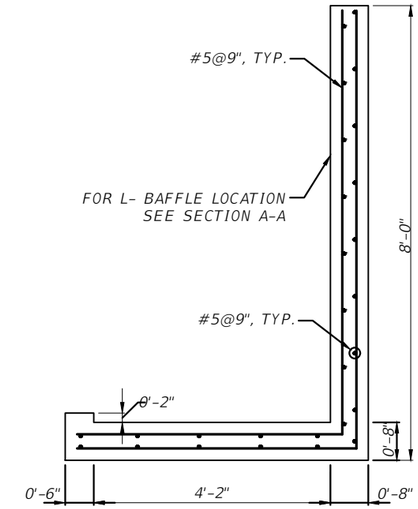

L-BAFFLE REINFORCEMENT DETAIL

SCALE: $\frac{3}{8}$"=1'-0"

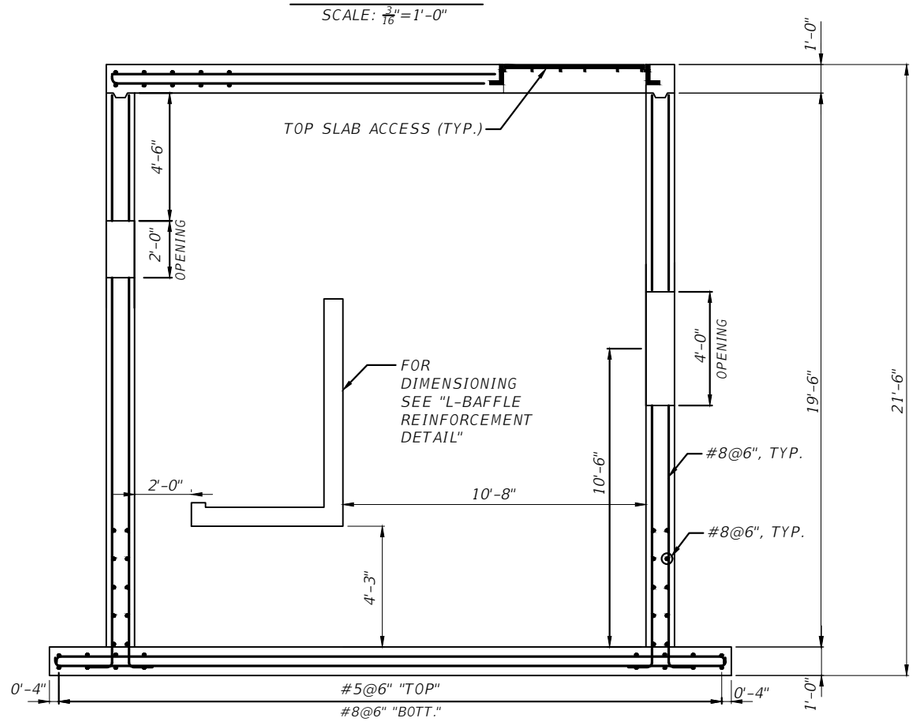

SECTION A-A

SCALE: $\frac{3}{16}$"=1'-0"

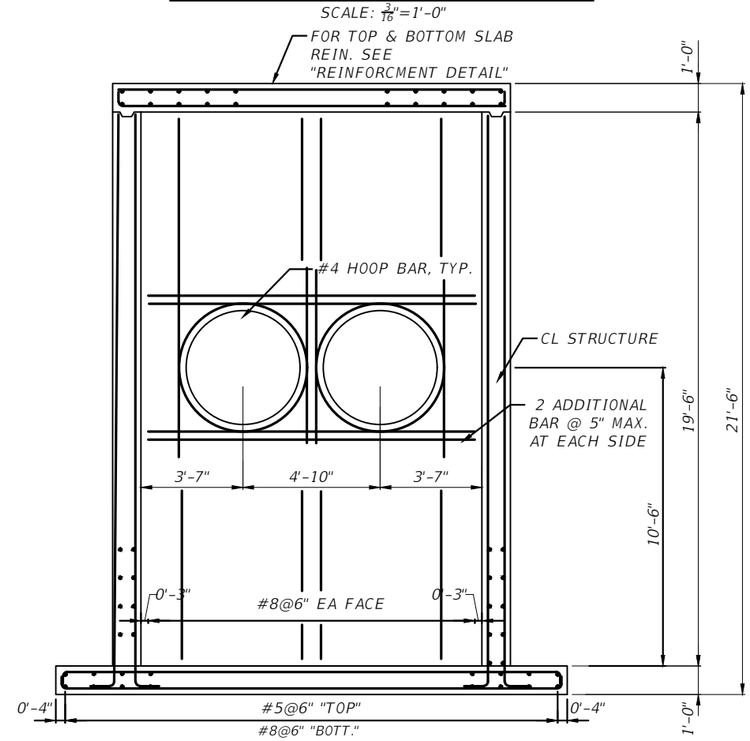

SECTION B-B

SCALE: $\frac{3}{16}$"=1'-0"

NOTES:

1. FOR WET WELL LOCATION SEE SHEET S1-B.

THE OFFICIAL RECORD OF THIS SHEET IS THE ELECTRONIC FILE DIGITALLY SIGNED AND SEALED UNDER RULE 61G15-23.004, F.A.C.

REVISIONS			
DATE	DESCRIPTION	DATE	DESCRIPTION

ROGER G KHOURI, P.E.
P.E. LICENSE NUMBER 47745
WSP USA, 7650 CORPORATE CENTER DRIVE,
SUITE 300, MIAMI, FLORIDA 33126
CERTIFICATE OF AUTHORIZATION 01462

SEA LEVEL RISE ROADWAY AND DRAINAGE PILOT PROJECT (KEY LARGO AND BIG PINE KEY)

MONROE COUNTY - DEPARTMENT OF ENGINEERING

WET WELL PLAN AND SECTIONS

SHEET NO. S-2B

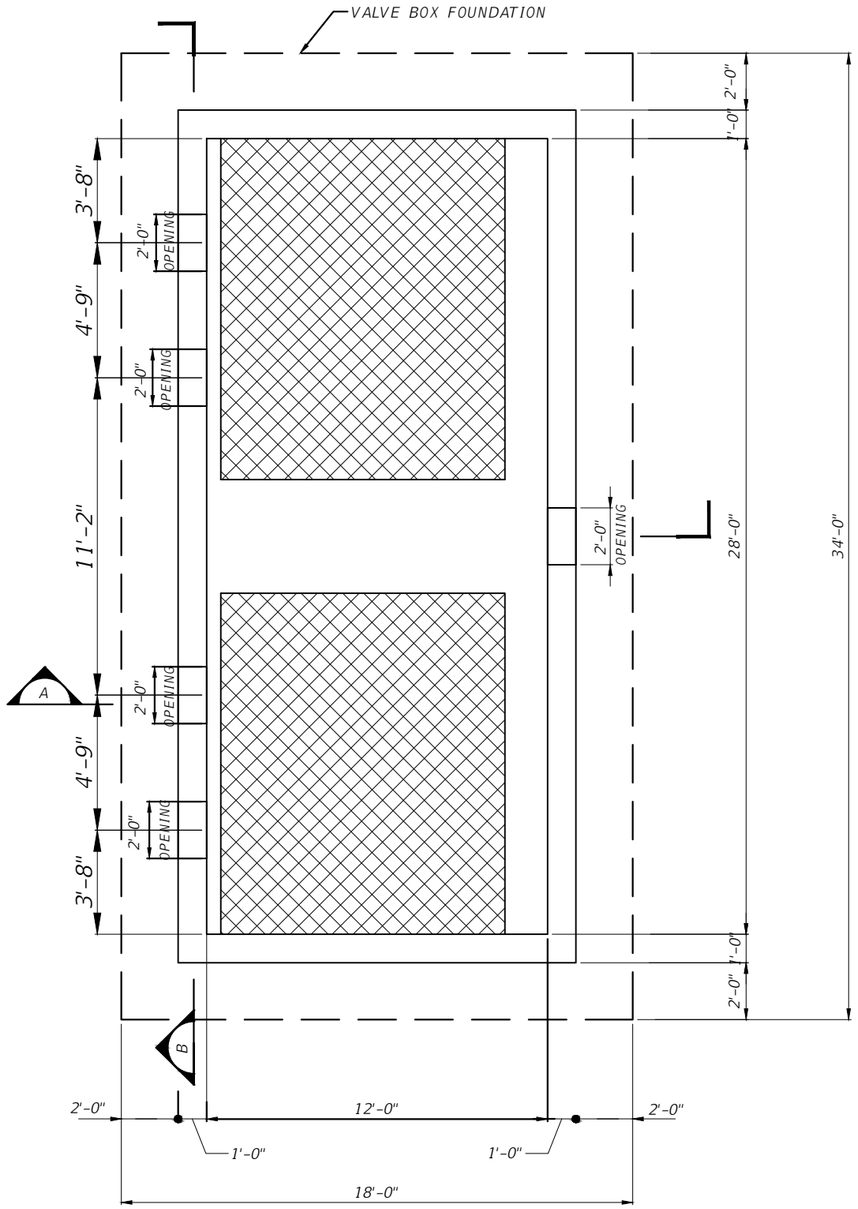

VALVE BOX-PLAN

SCALE: $\frac{3}{16}$"=1'-0"

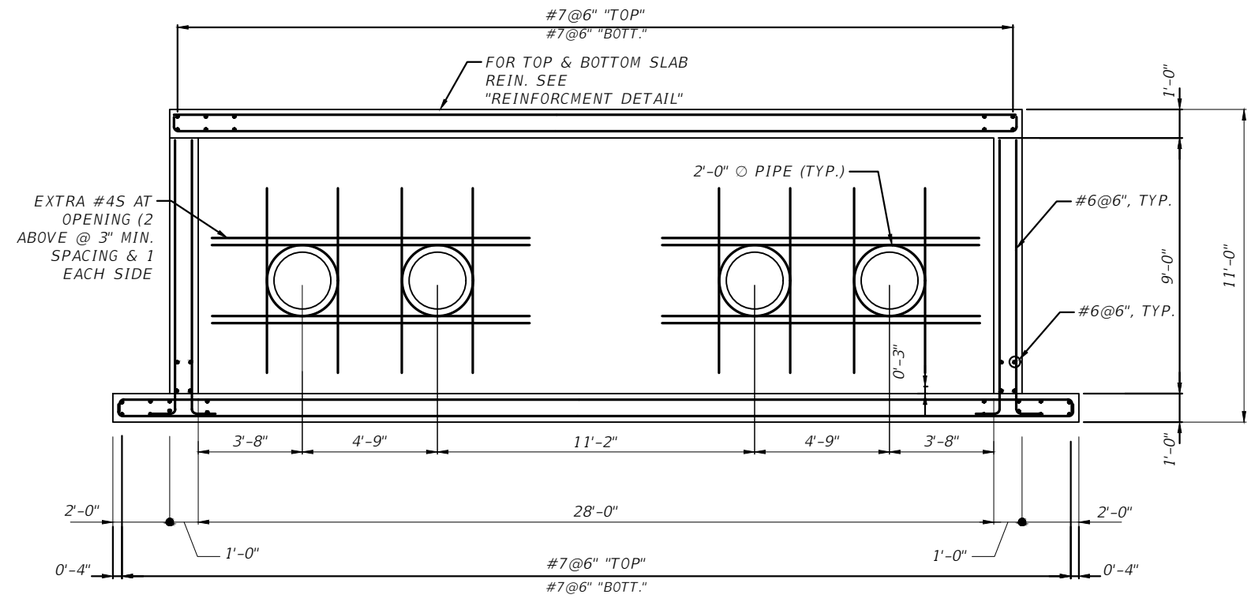

SECTION B-B

WALL 1 SHOWN, WALL 2 SIMILAR

SCALE: $\frac{3}{16}$"=1'-0"

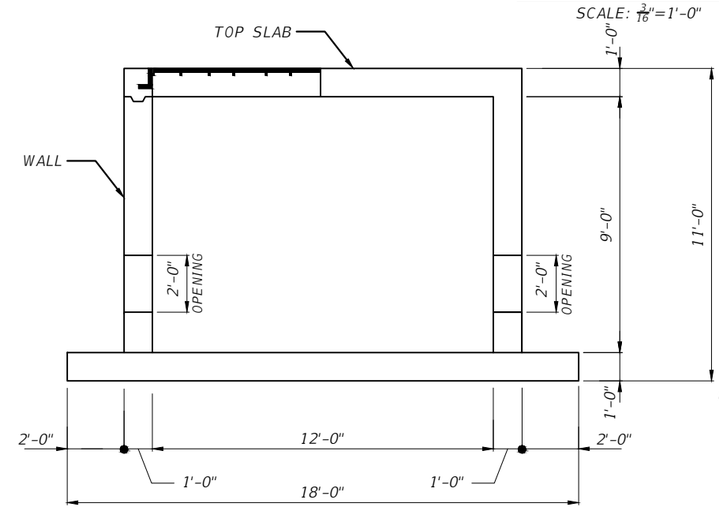

SECTION A-A

SCALE: $\frac{3}{16}$"=1'-0"

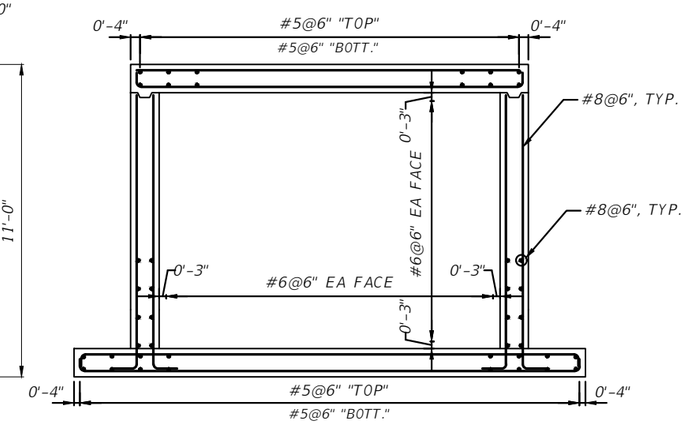

REINFORCEMENT DETAIL

SCALE: $\frac{3}{16}$"=1'-0"

NOTES:

1. FOR VALVE BOX LOCATION SEE SHEET S-1B.

THE OFFICIAL RECORD OF THIS SHEET IS THE ELECTRONIC FILE DIGITALLY SIGNED AND SEALED UNDER RULE 61G15-23.004, F.A.C.

REVISIONS			
DATE	DESCRIPTION	DATE	DESCRIPTION

ROGER G KHOURI, P.E.
P.E. LICENSE NUMBER 47745
WSP USA, 7650 CORPORATE CENTER DRIVE,
SUITE 300, MIAMI, FLORIDA 33126
CERTIFICATE OF AUTHORIZATION 01462

SEA LEVEL RISE ROADWAY AND DRAINAGE PILOT PROJECT (KEY LARGO AND BIG PINE KEY)

MONROE COUNTY - DEPARTMENT OF ENGINEERING

VALVE BOX PLAN AND SECTIONS

SHEET NO. S-3B

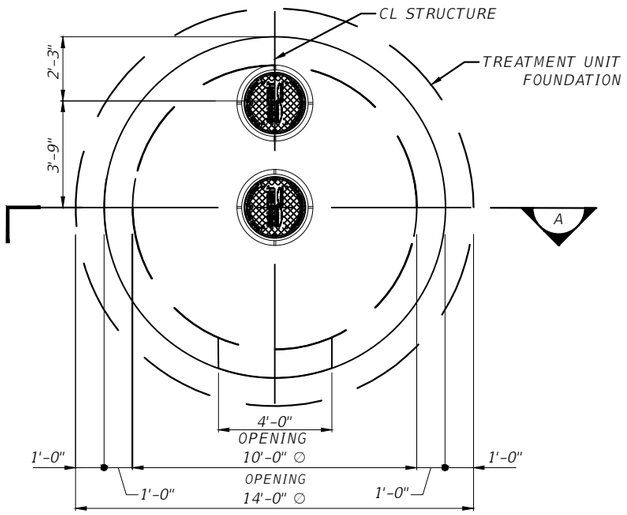

TREATMENT UNIT-PLAN

SCALE: $\frac{3}{16}$"=1'-0"

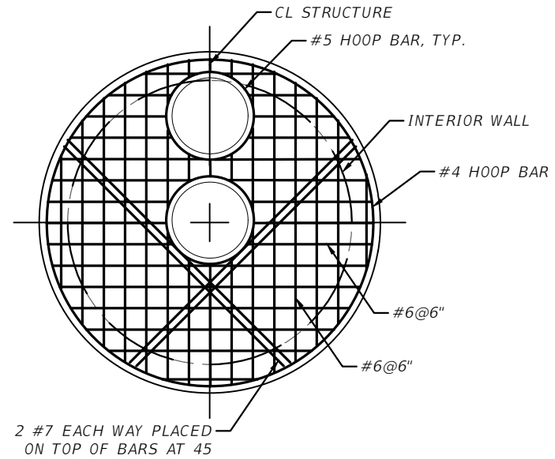

TOP SLAB REINFORCEMENT DETAIL

SCALE=$\frac{3}{16}$"=1'-0"

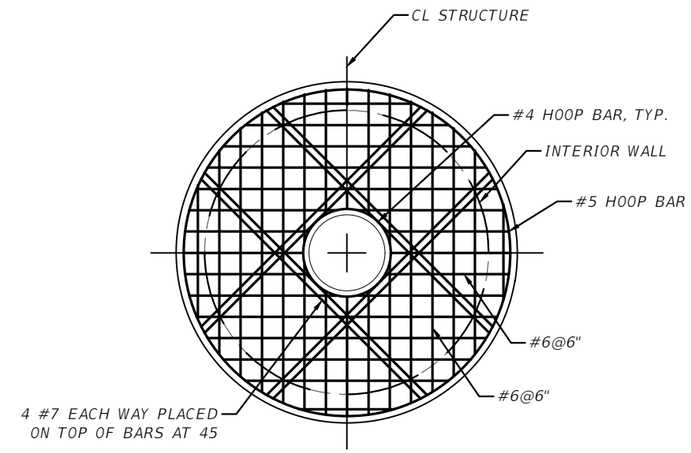

SECTION B-B

SCALE=$\frac{3}{16}$"=1'-0"

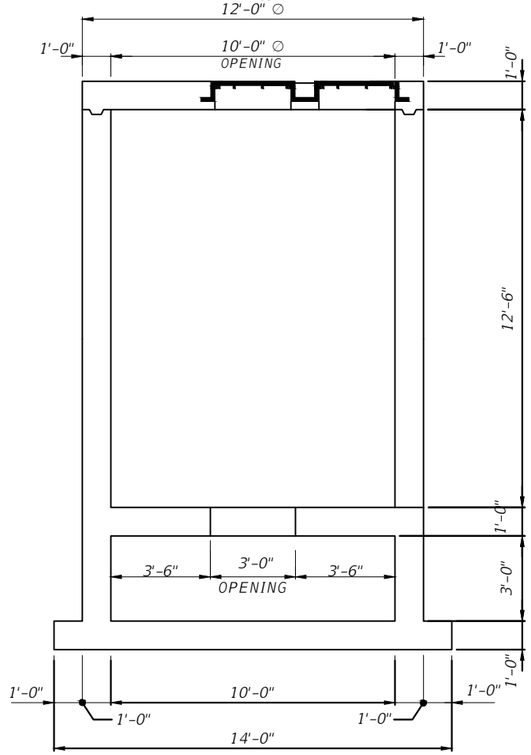

SECTION A-A

SCALE: $\frac{3}{16}$"=1'-0"

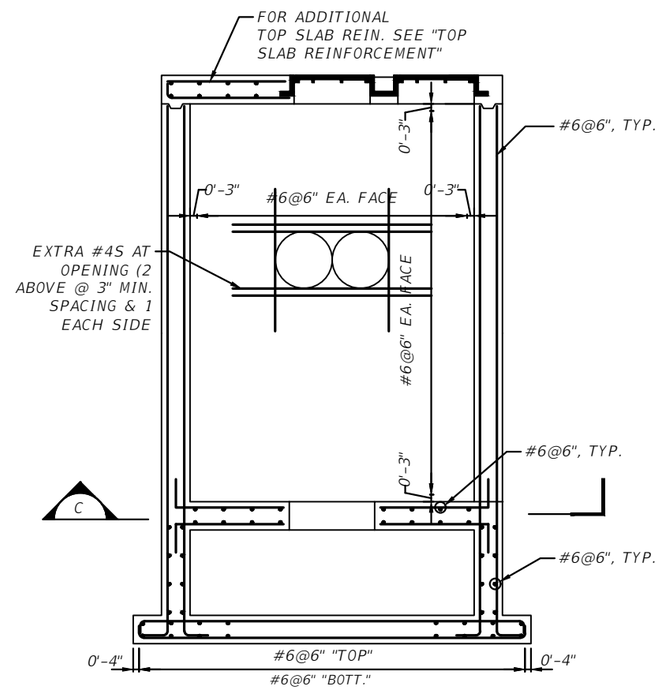

REINFORCEMENT DETAIL

SCALE=$\frac{3}{16}$"=1'-0"

NOTES:

1. FOR TREATMENT UNIT LOCATION SEE SHEET S-1B.

THE OFFICIAL RECORD OF THIS SHEET IS THE ELECTRONIC FILE DIGITALLY SIGNED AND SEALED UNDER RULE 61G15-23.004, F.A.C.

REVISIONS			
DATE	DESCRIPTION	DATE	DESCRIPTION

ROGER G KHOURI, P.E.
P.E. LICENSE NUMBER 47745
WSP USA, 7650 CORPORATE CENTER DRIVE, SUITE 300, MIAMI, FLORIDA 33126
CERTIFICATE OF AUTHORIZATION 01462

SEA LEVEL RISE ROADWAY AND DRAINAGE PILOT PROJECT (KEY LARGO AND BIG PINE KEY)
MONROE COUNTY - DEPARTMENT OF ENGINEERING

TREATMENT UNIT PLAN AND SECTIONS

SHEET NO. S-4B

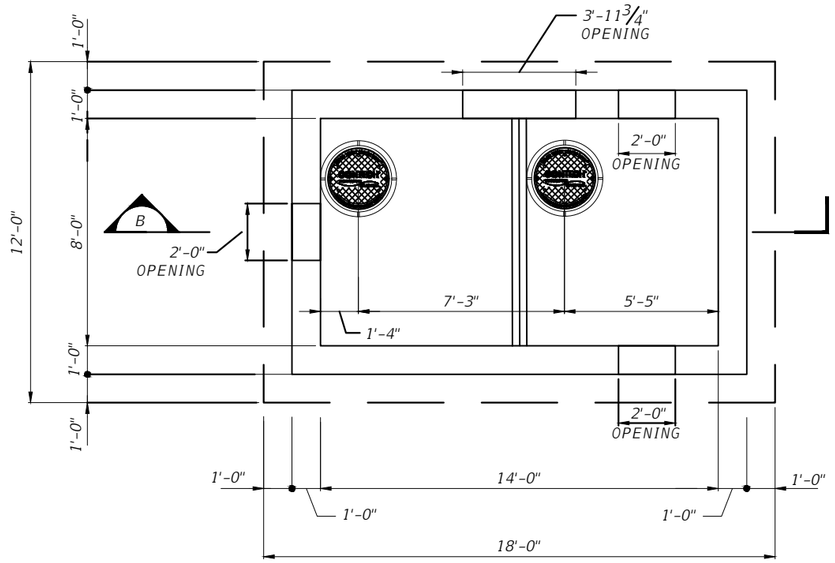

INLET BOX-PLAN

SCALE: $\frac{3}{16}$"=1'-0"

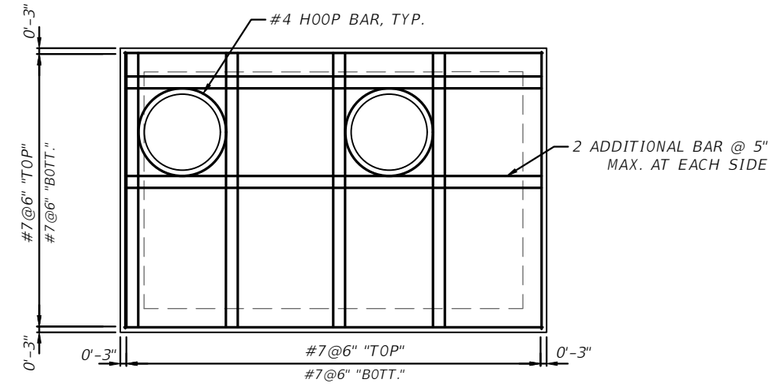

TOP SLAB REINFORCEMENT DETAIL

SCALE=$\frac{3}{16}$"=1'-0"

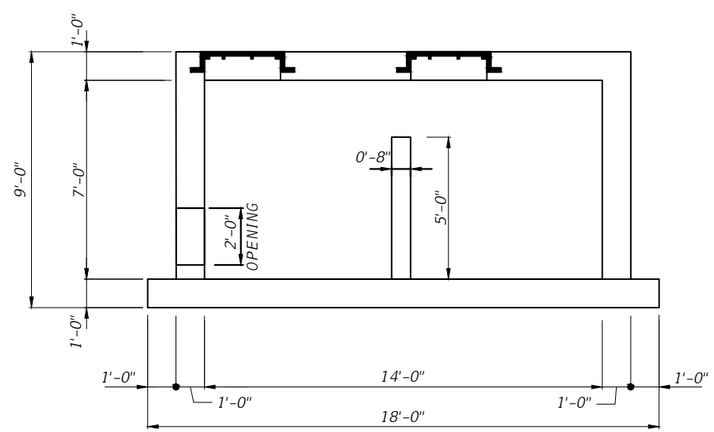

SECTION B-B

SCALE: $\frac{3}{16}$"=1'-0"

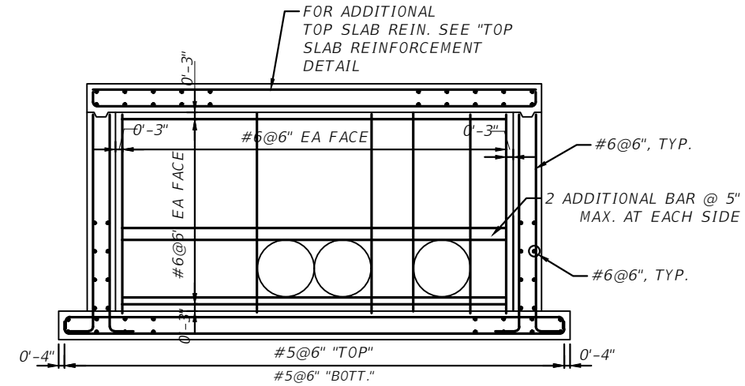

REINFORCEMENT DETAIL

SCALE=$\frac{3}{16}$"=1'-0"

NOTES:

1. FOR TREATMENT UNIT LOCATION SEE SHEET S-1B.

THE OFFICIAL RECORD OF THIS SHEET IS THE ELECTRONIC FILE DIGITALLY SIGNED AND SEALED UNDER RULE 61G15-23.004, F.A.C.

REVISIONS			
DATE	DESCRIPTION	DATE	DESCRIPTION

ROGER G KHOURI, P.E.
P.E. LICENSE NUMBER 47745
WSP USA, 7650 CORPORATE CENTER DRIVE,
SUITE 300, MIAMI, FLORIDA 33126
CERTIFICATE OF AUTHORIZATION 01462

SEA LEVEL RISE ROADWAY AND DRAINAGE PILOT PROJECT (KEY LARGO AND BIG PINE KEY)
MONROE COUNTY - DEPARTMENT OF ENGINEERING

INLET BOX PLAN AND SECTIONS

SHEET NO. S-5B

Appendix B: Board of County Commissioner Resolution No. 025-2017 – A Resolution approving Road Improvement Pilot Project in Two Communities

RESOLUTION NO. 025 -2017

A RESOLUTION OF THE BOARD OF COUNTY COMMISSIONERS OF MONROE COUNTY, FLORIDA. ADOPTING THE FINAL REPORT OF THE TIDAL FLOODING ROADS DEMONSTRATION PROJECTS WHICH RECOMMENDS ROAD IMPROVEMENT PROJECTS IN TWO COMMUNITIES AND TO MOVE FORWARD WITH THE DESIGN PHASE TO IMPLEMENT THE RECOMMENDATIONS; PROVIDING FOR AN EFFECTIVE DATE.

WHEREAS, Monroe County roads have been impacted by tidal flooding in 2015 and 2016 from King Tides; and

WHEREAS, knowing that Monroe County would be impacted by increased annual flooding from King Tides, storm events and/or sea level rise countywide, the County decided to move forward with a "Pilot Roads Project" to test methods for determining future flood risk scenarios and set a policy framework for making road elevation decisions relative to future road improvement projects; and

WHEREAS, the Board of County Commissioners accepted the *GreenKeys Sustainability Action Plan* in 2016 which included Recommendation 1-19 for a "Pilot project to conduct a Comprehensive Feasibility Study for Enhanced Stormwater and Tidewater Criteria (prioritizing areas) for near-term areas subject to inundation risk, including nuisance flooding (in two locations)"; and

WHEREAS, specific roadway areas were chosen within two communities for the study where impacts from the 2015 King Tides were the highest, including the Twin Lakes Community in Key Largo (Shaw Drive, Crane Street and Adams Drive) and the Sands Community in Big Pine Key (Father Tony Way and the Avenues); and

WHEREAS, the *Final Report for the Monroe County Pilot Roads Project: The Sands and Twin Lakes Communities* includes a Methodology and Technical Background (Part 1), Recommendations and Legal and Policy Analysis (Part 2), Appendix 1: A Draft Ordinance, and Appendix 2: "Methodology for development of flood level estimates for the two communities"; and

WHEREAS, different approaches to conceptual designs for the roads in the Twin Lakes and Sands Communities were evaluated, including stormwater features, and the Final Report makes specific design recommendations for incorporating sea level rise projections and an annual level of acceptable flooding not to be exceeded; and

WHEREAS, the Final Report for the *Monroe County Pilot Roads Project: The Sands and Twin Lakes Communities* includes Section 4.5 which is a *Final Technical Recommendation* using a methodology not to exceed an annual level of acceptable flooding more than 7 days and to include sea level rise projections (IPCC AR5 Median from the Southeast Regional Climate Compact's Unified Sea Level Rise Projection, 2015) to provide relief from periodic flooding; and

WHEREAS, the Pilot Project has provided valuable technical, design and policy information, including specific recommendations for each of the two Communities.

THE REMAINDER OF THIS PAGE PURPOSELY LEFT BLANK.

THEREFORE BE IT RESOLVED by the Board of County Commissioners of Monroe County that:

1. The above recitals are hereby incorporated into this resolution as restated herein constitute the legislative findings and intent of the Board of County Commissioners of Monroe County, Florida.
2. The Board of County Commissioners shall approve the *Final Report for the Monroe County Pilot Roads Project: The Sands and Twin Lakes Communities*.
3. The Board of County Commissioners hereby directs staff to budget funds in the FY17/18 budget and to move forward with the design phase to implement the Recommendations included under Section 4.5 of the *Final Report for the Monroe County Pilot Roads Project: The Sands and Twin Lakes Communities*.
4. This resolution shall take effect immediately upon adoption.

PASSED AND ADOPTED by the Board of County Commissioners of Monroe County Florida, at a regular meeting of said Board held on the 18th day of January, 2017.

Mayor George Neugent	Yes
Mayor Pro Tem David Rice	Yes
Commissioner Heather Carruthers	Yes
Commissioner Danny L. Kolhage	Yes
Commissioner Sylvia Murphy	Yes

Attest: KEVIN MADOK, CLERK

By: _____
Deputy Clerk

BOARD OF COUNTY COMMISSIONERS OF MONROE COUNTY, FLORIDA

By: George R. Neugent
Mayor

MONROE COUNTY ATTORNEY
APPROVED AS TO FORM
DEPUTY COUNTY ATTORNEY
ASSISTANT COUNTY ATTORNEY
Date 2/22/17

FILED FOR RECORD
2017 FEB 22 PM 5:02
CLK. CIR. CT.
MONROE COUNTY, FLA

Appendix C: Board of County Commissioner Resolution No 028-2017 – A Resolution to adopt a road elevation standard

RESOLUTION NO. 028 -2017

A RESOLUTION OF THE BOARD OF COUNTY COMMISSIONERS OF MONROE COUNTY, FLORIDA SETTING AN INTERIM STANDARD FOR DETERMINING THE ELEVATION OF FUTURE ROAD IMPROVEMENT PROJECTS IN MONROE COUNTY AND DIRECTING INITIATION OF A COUNTYWIDE ROADS ANALYSIS TO IDENTIFY NEAR-TERM ROADS SUBJECT TO RISK; PROVIDING FOR AN EFFECTIVE DATE.

WHEREAS, Monroe County roads have been impacted by tidal flooding in 2015 and 2016 from King Tides; and

WHEREAS, knowing that Monroe County would be addressing increased flooding from King Tides, storm events and/or sea level rise countywide, the County decided to move forward with a "Pilot Roads Project" to test methods for determining future flood risk scenarios and set a policy framework for making road elevation decisions relative to future road improvement projects; and

WHEREAS, the Board of County Commissioners accepted the *GreenKeys Sustainability Action Plan* in 2016 which included Recommendation 1-19 for a "Pilot project to conduct a Comprehensive Feasibility Study for Enhanced Stormwater and Tidewater Criteria (prioritizing areas) for near-term areas subject to inundation risk, including nuisance flooding (in two locations)"; and

WHEREAS, specific roadway areas were chosen within two communities for the study where impacts from King Tides were the highest including the Twin Lakes Community in Key Largo (Shaw Drive, Crane Street and Adams Drive) and the Sands Community in Big Pine Key (Father Tony Way and the Avenues); and

WHEREAS, the *Final Report for the Monroe County Pilot Roads Project: The Sands and Twin Lakes Communities*, includes a Methodology and Technical Background (Part 1), Recommendations and Legal and Policy Analysis (Part 2), Appendix 1: "Methodology for development of flood level estimates for the two communities" and Appendix 2: Draft Ordinance; and

WHEREAS, the methodology for development of flood level estimates for the two communities identifies water elevations that represents values for an allowable annual flooding return period (not to exceed 7 days) and also includes sea level rise projections (IPCC AR5 Median from the Southeast Regional Climate Compact's Unified Sea Level Rise Projection, 2015) in determining desired final roadway elevations for road improvement projects; and

WHEREAS, the *GreenKeys Sustainability Action Plan* also included Recommendation 2-14 to "Conduct a *Countywide Roads Analysis* to identify near-term roads subject to inundation risk, including nuisance flooding" and Recommendation 2-36 to "Ensure that all new nuisance flooding data informs future road decisions. These data will also need to be considered for future road decisions"; and

WHEREAS, the *Countywide Roads Analysis* (Recommendation 2-14) will help develop an understanding of the economic and policy impacts of adopting an annual allowable flooding return period with a sea level rise assumption for future road improvement projects; and

WHEREAS, because the Countywide Roads analysis will take some time to complete, in the interim, the Recommendations and Appendix 1 Methodology from the Final Report for the *Monroe County Pilot Roads Project: The Sands and Twin Lakes Communities* serves as an appropriate Interim Standard for determining the elevation of road improvement projects; and

WHEREAS, the County realizes the *Countywide Roads Analysis* may result in different future standards for determining the elevation of road improvement projects based upon projected levels of sea level rise in the future and will therefore use the Interim Standard until a Revised Standard is accepted and approved.

THEREFORE BE IT RESOLVED by the Board of County Commissioners of Monroe County that:

1. The above recitals are hereby incorporated into this resolution as restated herein constitute the legislative findings and intent of the Board of County Commissioners of Monroe County, Florida.
2. The Recommendations and Appendix 1 Methodology from the *Final Report for the Monroe County Pilot Roads Project: The Sands and Twin Lakes Communities* will serve as an appropriate Interim Standard for determining the elevation of road improvement project until a Revised Standard is developed in the future.
3. In order to determine the countywide impacts of establishing a uniform methodology for incorporating sea level rise projections into future road improvement projects, the Board of County Commissioners hereby directs staff to move forward with a *Countywide Roads Analysis* project to identify near-term roads subject to inundation risk, including nuisance flooding.
4. The Board of County Commissioners hereby directs staff to budget funds in the FY17/18 budget for the Countywide Roads Analysis project.
5. This resolution shall take effect immediately upon adoption.

PASSED AND ADOPTED by the Board of County Commissioners of Monroe County Florida, at a regular meeting of said Board held on the 18th day of January, 2017.

Mayor George Neugent	Yes
Mayor Pro Tem David Rice	Yes
Commissioner Heather Carruthers	Yes
Commissioner Danny L. Kolhage	No
Commissioner Sylvia Murphy	Yes

Attest: KEVIN MADOK, CLERK

By: _____
Deputy Clerk

BOARD OF COUNTY COMMISSIONERS OF MONROE COUNTY, FLORIDA

By: George R. Neugent
Mayor

FILED FOR RECORD
2017 FEB 21 AM 8:45
CLK. CIR. CT.
MONROE COUNTY, FLA.

MONROE COUNTY ATTORNEY
APPROVED AS TO FORM
PETRO J. MERCADO
ASSISTANT COUNTY ATTORNEY
Date 2/16/17

Appendix D: Public Hearing

County of Monroe
The Florida Keys

Robert B. Shillinger, **County Attorney****
Pedro J. Mercado, Assistant County Attorney**
Cynthia L. Hall, Assistant County Attorney**
Christine Limbert-Barrows, Assistant County Attorney**
Derek V. Howard, Assistant County Attorney**
Steven T. Williams, Assistant County Attorney**
Peter H. Morris, Assistant County Attorney**
Patricia Eables, Assistant County Attorney
Chris Ambrosio, Assistant County Attorney**
Paunece Scull, Assistant County Attorney

** Board Certified in City, County & Local Govt. Law

BOARD OF COUNTY COMMISSIONERS
Mayor Sylvia Murphy, District 5
Mayor Pro Tem Danny L. Kolhage, District 1
Michelle Coldiron, District 2
Heather Carruthers, District 3
David Rice, District 4

Office of the County Attorney
1111 12th Street, Suite 408
Key West, FL 33040
(305) 292-3470 – Phone
(305) 292-3516 – Fax

August 9, 2019

Key West Citizen
Attn.: Sue Stamper-Legal Notices
3420 Northside Drive
legals@keysnews.com
Acct. No. 143340

Keys Weekly
Attn.: Anneke Patterson
Anneke@keysweekly.com
Acct. No. 4211

News Barometer
Attn.: Steve/Holly Estes
bigpinenews@aol.com
Acct. No. NB021

Re: Notice of Public Hearing - Hurricane Irma Infrastructure Repair & Mitigation Program

Please find attached a Notice of Public Hearing for publication in the legal advertisement section of your newspapers on the dates indicated. I would appreciate confirmation of receipt of this request and publication date via my e-mail address: Dastugue-Laurie@monroecounty-fl.gov. Please mail the subsequent invoice and Proof of Publication directly to:

Helene Wetherington, Director
Monroe County Disaster Recovery
Monroe County Regional Service Center
2798 Overseas Highway
Marathon, FL 33050

Thank you for your assistance in this matter. Please call me with any questions: 305-292-3576.

Laurie Dastugue
Paralegal, Litigation Department
Attachment
cc: Helene Wetherington

NOTICE OF PUBLIC COMMENT PERIOD

NOTICE IS HEREBY GIVEN TO WHOM IT MAY CONCERN

PUBLIC COMMENTS PERIOD REGARDING THE "HURRICANE IRMA INFRASTRUCTURE REPAIR AND MITIGATION PROGRAM":

The State of Florida has allocated $85 Million to the Infrastructure Repair and Mitigation Program funded through the Community Development Block Grant-Disaster Recovery (CDBG-DR). The goal of the program is to repair damage to infrastructure while mitigating against future damage to make the community more resilient. Monroe County proposes applying for $2.5 Million to elevate Father Tony Way on Big Pine Key and to install a storm water drainage system. The pilot project will prevent repetitive flooding and ensure continued access to the residential area. The proposed application will be available for comment at

- **http://www.monroecounty-fl.gov/infrastructurerepair;**
- **Copies may be obtained at the Gato Government Building, 1100 Simonton Street, Key West, Florida 33040 upon request.**

Comments on the proposed application will be accepted online from August 10-August 20, 2019 at www.monroecounty-fl.gov\infrastructurerepair or by email to Wetherington-Helene@monroecounty-fl.gov.

Dated at Key West, Florida, this ___ day of August, 2019.

(SEAL)

KEVIN MADOK, Clerk of the Circuit Court and ex officio Clerk of the Board of County Commissioners of Monroe County, Florida

Publication Dates:
Citizen: Mon., 8/9

NOTICE OF PUBLIC HEARING

NOTICE IS HEREBY GIVEN TO WHOM IT MAY CONCERN, that on Wednesday, August 21, 2019, at 10:00 A.M., at the Harvey Government Center, 1200 Truman Avenue, Key West, Monroe County, Florida, the Board of County Commissioners of Monroe County, Florida, intends to consider the following:

A PUBLIC MEETING REGARDING THE "HURRICANE IRMA INFRASTRUCTURE AND MITIGATION PROGRAM"

The State of Florida has allocated $85 Million to the Infrastructure Repair and Mitigation Program, funded through the Community Development Block Grant-Disaster Recovery (CDBG-DR). The goal of the program is to repair damage to infrastructure while mitigating against future damage to make the community more resilient. Monroe County proposes applying for $2.5 Million to elevate Father Tony Way on Big Pine Key and to install a storm water drainage system. The pilot project will prevent repetitive flooding and ensure continued access to the residential area. The proposed application will be available for review at:

- **http://www.monroecounty-fl.gov/infrastructurerepair;**
- **Copies of the application may be obtained at the Historic Gato Government Building, 1200 Simonton Street, Key West, Florida 33040, upon request.**

ADA ASSISTANCE: If you are a person with a disability who needs special accommodation in order to participate in this meeting, please contact the County Administrator's Office, by phoning (305) 292-4441, between the hours of 8:30 a.m.---5:00 p.m., no later than five (5) calendar days prior to the scheduled meeting; if you are hearing-or voice-impaired, call "711".

Pursuant to Section 286.0105, Florida Statutes, notice is given that if a person decides to appeal any decision made by the Board with respect to any matter considered at such hearings or meetings, such person will need a record of the proceedings, and that, for such purpose, such person may need to ensure that a verbatim record of the proceedings is made, which record includes the testimony and evidence upon which the appeal is to be based.

Dated at Key West, Monroe County, Florida, this 9th day of August, 2019.

(SEAL)

KEVIN MADOK, Clerk of the Circuit Court and *ex officio* Clerk of the Board of County Commissioners of Monroe County, Florida

Publication Dates:
Citizen: Wed., 8/14/19
Keys Weekly: Thur., 8/15/19
News Barometer: Fri., 8/16/19

Monroe County, Florida
CDBG-DR, Infrastructure Repair and Mitigation Program
Public Hearing Sign-In Sheet
August 21, 2019, Marathon, Florida

Name	Address	City	Email
Lisa Tegu	1707 Rose St	KW	
Judith S. Clarke	1008 Olivia St.	KW	
Cheryl Quelvin	P.O. Box 430894	Big Pine Key	
BRYAN COOK	1100 SIMONTON	KW	
Sheryl Graham	1100 Simonton St.	KW	
Danise Henriquez	1200 TRUMAN AVE	KW	
George Neugent	1583 52nd ST	Marathon	gneugent.gn@gmail.com
Natalie Maddox	1100 Simonton ST	KW	
Richard Strickland	3491 S. Roosevelt	KW	
Charles Lindsey	217 Bruce Ct	Marathon	

Monroe County, Florida
CDBG-DR, Infrastructure Repair and Mitigation Program
Public Hearing Sign-In Sheet

August 21, 2019, ~~Marathon~~, Florida Key West

Name	Address	City	Email
Pamela Hancock	2 Riviera Drive	Key West	
Kevin Madok	Po Box 430397	Big Pine Key	
Robert B. Shillinger	1111 12th St. #408	Key West	shillinger-bob@monroecounty-fl.gov
Roman Gastesi	1100 Simonton St.	K.W.	GASTESI-ROMAN@MONROECOUNTY-FL.GOV
Lindsay Ballam	1100 Simonton St.	Key West	ballara-lindsay@monroecounty-fl.gov
Christine Hurley	1100 Simonton St	KW	Hurley-christine@monroe county-fl.gov
Tina Boan	1100 Simonton St.	KW	Boan-Tina@monroecounty-fl.gov
Cynthia J. McPherson	2798 o/s Hwy	Marathon	mcpherson-cynthia@monroecounty-fl.gov
Cheryl Cioffari	2798 o/s Hwy	Marathon	cioffari-cheryl@monroecounty-fl.gov
Cynthia Guerra	2798 o/s Hwy	Marathon	guerra-cynthia@monroecounty-fl.gov
Kristen Livengood	50 Palmetto Drive	Big Pine Key	kristen.livengood@gmail.com
[illegible]	1100 Simont St	KW	—
[illegible]	102050 o/s Hwy / Key	Largo	hay-Rhonda@monroecounty-fl.gov
Kevin Wilson	1100 Simonton St Key West	Key West	WILSON-KEVIN@MONROECOUNTY-FL.GOV
Drew Wilson	44 Bryan Ave	Key Largo FL	DREW.R.WILSON@GMAIL.COM

APG
Media of East Carolina
Key West Citizen - Florida Free Press - Paradise
The Daily Reflector - The Daily Advance - The Rocky Mount Telegram
Bertie Ledger - Chowan Herald - Duplin Times - Farmville Enterprise - Perquimans Weekly
Standard Laconic - Tarboro Weekly - Times Leader - Williamston Enterprise
PO Box 1967 Greenville NC 27835 - (252) 329-9500

Date: August 12, 2019

- LEGAL AD PROOF -

Thank you for advertising with us! This is the proof of your ad scheduled to run on the dates indicated below. If changes are needed, please contact Dawn Kawzinsky by phone at (305) 292-7777 or email at legals@keysnews.com.

CUSTOMER INFORMATION

Account #:	143340
Company Name:	MONROE CO LOCAL DISASTER RECOVERY
Address:	2798 OVERSEAS HWY KEY LARGO FL 33037
Telephone:	(305) 289-2524
Email:	wetherington-helene@monroecounty-fl.gov

AD INFORMATION

Ad ID:	307203		
Run Dates:	08/16/19 to 08/16/19		
# of Inserts:	2	Account Rep:	Sue Stamper
# of Lines:	72	Phone #:	(305) 292-7777
Ad Class:	59	Email:	legals@keysnews.com
Total Cost:	$172.80		
Ordered By:			
Description:	HEARING 8.21		

Publications	Start Date	End Date	# of Insertions
Key West Citizen	08/16/19	08/16/19	1
KeysNews.com	08/16/19	08/16/19	1

Ad Proof

NOTICE OF PUBLIC HEARING

NOTICE IS HEREBY GIVEN TO WHOM IT MAY CONCERN, that on Wednesday, August 21, 2019, at 10:00 A.M., at the Harvey Government Center, 1200 Truman Avenue, Key West, Monroe County, Florida, the Board of County Commissioners of Monroe County, Florida, intends to consider the following:

A PUBLIC MEETING REGARDING THE "HURRICANE IRMA INFRASTRUCTURE AND MITIGATION PROGRAM"

The State of Florida has allocated $85 Million to the Infrastructure Repair and Mitigation Program, funded through the Community Development Block Grant-Disaster Recovery (CDBG-DR). The goal of the program is to repair damage to infrastructure while mitigating against future damage to make the community more resilient. Monroe County proposes applying for $2.5 Million to elevate a portion of Father Tony Way on Big Pine Key and to install a storm water drainage system. The intent of the design is to lessen the severity of flooding and decrease predicted flood damage. The proposed application will be available for review at:

- http://www.monroecounty-fl.gov/infrastructurerepair;
- Copies may be obtained at the Historic Gato Government Building, 1200 Simonton Street, Key West, Florida 33040, upon request.

ADA ASSISTANCE: If you are a person with a disability who needs special accommodation in order to participate in this meeting, please contact the County Administrator's Office, by phoning (305) 292-4441, between the hours of 8:30 a.m.---5:00 p.m., no later than five (5) calendar days prior to the scheduled meeting; if you are hearing-or voice-impaired, call "711".

Pursuant to Section 286.0105, Florida Statutes, notice is given that if a person decides to appeal any decision made by the Board with respect to any matter considered at such hearings or meetings, such person will need a record of the proceedings, and that, for such purpose, such person may need to ensure that a verbatim record of the proceedings is made, which record includes the testimony and evidence upon which the appeal is to be based.

Dated at Key West, Monroe County, Florida, this 12th day of August, 2019.

KEVIN MADOK, Clerk of the Circuit Court and ex officio Clerk of the Board of County Commissioners of Monroe County, Florida
08/16/19 Key West Citizen

County of Monroe
The Florida Keys

BOARD OF COUNTY COMMISSIONERS
Mayor Sylvia Murphy, District 5
Mayor Pro Tem Danny Kolhage, District 1
Michelle Coldiron, District 2
Heather Carruthers, District 3
David Rice, District 4

County Commission Meeting
August 21, 2019
Agenda Item Number: D.5
Agenda Item Summary #5860

BULK ITEM: Yes

DEPARTMENT: Local Disaster Recovery

TIME APPROXIMATE:
10:00am

STAFF CONTACT: Helene Wetherington (305) 289-2524

AGENDA ITEM WORDING: Public Meeting for citizens and municipalities to provide input on an application for non-matching grant funds for a mitigation project encompassing road repairs/elevation and drainage improvements in the amount of $2.5 Million in the Sands Subdivision on Big Pine Key utilizing Community Development Block Grant - Disaster Recovery Infrastructure Repair and Mitigation Program funding from the Florida Department of Economic Opportunity (DEO) funded through the Federal Housing and Urban Development Agency (HUD), after being recommended by the Citizen's Advisory Task Force, after a duly noticed 10 day public comment period; after a 5 day public notice to municipalities and Approval to submit grant application to DEO.

ITEM BACKGROUND:
Hurricane Irma, a Category 4 hurricane, made landfall in the Florida Keys on September 10, 2017, causing the destruction and significant flooding of low-lying areas throughout the Florida Keys. Congress appropriated $616 Million for the State of Florida in the aftermath of Hurricane Irma. The Department of Economic Opportunity (DEO) developed a Community Development Block Grant - Disaster Recovery (CDBG-DR) Action Plan and allocated **$85 Million for the Infrastructure Repair and Mitigation Program**. This program does not require a local match.

The purpose of Rebuild Florida's CDBG-DR Infrastructure Repair and Mitigation Program is to repair damage to infrastructure while mitigating against future damage and make the community more resilient. These funds will support the elevation and reconstruction with proper drainage facilities of Father Tony Way in the Sands Subdivision on Big Pine Key. This improvement addresses drainage issues shown on the attached map in white. It further protects access to abutting roadways by eliminating the risk of flooding of a main road that connects to residential street show in yellow on the map. The pilot project should prevent repetitive flooding and ensure continued access to the residential area creating economic benefit to the community and protecting health and safety.

DEO Program Parameters follow:

Infrastructure Repair and Mitigation Activities

The State of Florida has made significant investments in mitigation over the past 25 years to ensure that infrastructure is able to withstand the impacts of wind and flood events. Hurricane Irma was a success story for the state in that infrastructure damage assessments were not as high as initially projected due to this major statewide investment. DEO will continue to strengthen the state's infrastructure by creating an Infrastructure Repair and Mitigation Program that allows communities to use CDBG-DR to leverage other funding sources such as the Hazard Mitigation Grant Program (HMGP), 406 Public Assistance (406 PA) Mitigation Program. Some communities are not able to fully utilize these other resources following a disaster because reserve cash funds are exhausted by disaster recovery efforts and they cannot meet local match requirements. Allowing local governments to leverage CDBG-DR funding as match will enable communities, especially smaller and rural local governments, to better utilize all resources available to them.

In the development of policies and procedures, cost benefit will be addressed. DEO acknowledges infrastructure activities may have unintended risks that could potentially effect communities. With this understanding, DEO will follow guidance provided in the Federal Register to avoid disproportionate impacts on vulnerable populations and environmental injustice. Additionally, DEO recognizes the importance of resiliency against future storms and will employ adaptable and reliable technologies to guard against premature obsolescence of

infrastructure. DEO will describe the implementation of utilizing these technologies, when applicable, in its program policies and procedures manual.

Infrastructure Repair and Mitigation Program

DEO has received an additional allocation totaling in approximately $156 million. Approximately $85 million will be distributed in the Infrastructure Repair and Mitigation Program. Hurricane Irma affected many community's infrastructure systems such as damaging roadways, bridges and state beaches. Funding will be dispersed to communities impacted by Hurricane Irma through a competitive application cycle with priority given to projects that can demonstrate urgent need, readiness to proceed, and that benefit LMI. Where possible, DEO will leverage other sources such as FEMA Public Assistance funding to first address remaining urgent and unmet needs in communities.

Eligible activities within this program may include, but are not limited to the following:

- Restoration of infrastructure damaged by Hurricane Irma (such as water and sewer facilities, streets, removal of debris, drainage, bridges, etc.).
- Demolition and rehabilitation of publicly or privately owned commercial or industrial buildings.
- Renourishment of protective coastal dunes systems and state beaches.
- Repairs to damaged buildings that are essential to the health, safety and welfare of a community when repairs to these buildings constitutes an urgent need (this can include police stations, fire stations, parks and recreational centers, community and senior centers, hospitals, clinics, schools and educational facilities, other public properties).
- Repairs to water lines and systems, sewer lines and systems, drainage and flood mitigation systems.

Prior to opening the competitive application cycle for the Infrastructure Repair and Mitigation Program, DEO will send an announcement through its mailing list describing the details of this program as well as an announcement on DEO's webpage which can be found here. DEO will hold a pre-application training to those interested in the program. The pre-application training will go over the full details of the program. This training will also be advertised on the webpage. Then, following a tentative award, DEO will hold another pre-implementation training. This training will cover all materials and expectations for subrecipients. Following an award, DEO will hold trainings, as needed.

HUD has announced that Florida will receive an additional allocation of funds specifically for mitigation. Additional Guidance will be released in the federal register on how the funding can be used by states. The state of Florida will further define its program and adjust the budget in an amendment to this action plan, based on this guidance.

Competitive Application Cycle

Applicants will select projects or programs to propose to DEO for funding in accordance with DEO thresholds and objectives. These thresholds are:

- Projects must demonstrate tie-back to Hurricane Irma
- Projects must not duplicate benefits.

DEO will also consider to what extent proposed projects or programs support the following objectives:

- Projects must support LMI housing needs in some way,
- Projects must primarily serve LMI populations, or
- Demonstrate an urgent need in the community

DEO will first consider LMI as the national objective for infrastructure projects. The urgent need national objective will only be used if the project is not LMI, but is needed to alleviate emergency conditions. When using urgent need as a national objective, DEO will obtain justification from the local government or municipality to certify the urgency of the condition.

Applicants may pursue a range of eligible activities as allowed under CDBG-DR regulations for this appropriation, so long as they are in accordance with DEO threshold requirements and the requirements for the applicable activity as outlined in the Action Plan and Federal Register. Applicants will be required to meet HUD regulations, such as environmental, supplication of benefits, fair housing and others.

The state has adopted monitoring standards, including procedures to (i) ensure program requirements (including non-duplication of benefits) are met, and (ii) provide for continual quality assurance and adequate program oversight. These standards and procedures are included in the pre-award Implementation Plan as required by the Federal Register. Monitoring will be conducted by DEO who will be supported by an external vendor procured through competitive solicitation to ensure that program activities progress toward timely completion and to allow for the early identification of potential issues and problems so they can be prevented or corrected.

Monitoring will also include environmental compliance under 24 CFR Part 58. DEO currently has staff that will oversee environmental compliance. Additionally, the current staff will be augmented by external vendors procured through competitive solicitation.

The DEO Disaster Recovery monitoring program includes desk monitoring and onsite monitoring with priority and frequency based on the results of a risk assessment of each subrecipient. The purpose of the risk assessment is to define the scope and focus of the monitoring efforts, including establishing a framework for determining the appropriate level of monitoring consistent with available resources. In addition, the risk assessment will be required each state fiscal year to guarantee continuous review of risks. DEO monitoring is based on criteria consistent with HUD guidance in assessing program risk. The risk assessment provides the basis for developing individual monitoring strategies and documents the decisions and recommendations regarding where to apply staff and travel resources for monitoring, training, and/or technical assistance.

The Florida Auditor General and staff will act as the state's independent auditor and conduct financial audits of the accounts and records of state agencies. Where applicable, accounting policies and procedures of DEO should mirror the requirements of the Office of Auditor General.

The State of Florida is dedicated to the prevention of fraud, waste, and abuse. DEO's Office of the Inspector General serves as DEO's internal auditor. Internal audit functions associated with Disaster Recovery funding may be supported by external vendors procured through competitive solicitation. All suspected cases of fraud will be taken seriously and complaints will be reported to DEO's Office of the Inspector General at OIG@deo.myflorida.com or 1-855-456-0650. If the Office of Inspector General has reasonable grounds to believe there has been a violation of criminal law, the Office will report expeditiously to the appropriate law enforcement agency.

Allocation for Activity: $85,819,653 Competitive Cycle

Maximum Award: N/A

Responsible Entity for Administering: DEO

Eligibility: 105(a)(2)

National Objective: Low- and moderate-income benefit or Urgent Need

To be eligible to receive funds, Monroe County must consider the needs of all municipalities within the incorporated as well as unincorporated area of the county. This meeting serves as a public meeting with city governments. The County has met the CDBG-DR and DEO requirements for notice and documentation.

The Type of project is a stormwater repair and road elevation project in an area that frequently floods.

Deadline for Comments is 8/20/19.

Contact Person: Helene Wetherington, 305-504-3036 and Wetherington-Helene@monroecounty-fl.gov

As per the grant requirements, public notice of this public meeting and public notice of the 10-day public comment period was published in the Citizen, as the newspaper of general circulation in Monroe County and also posted to the County's website. The notices are attached for reference.

Monroe County's application for CDBG-DR Infrastructure repair and mitigation funds can be found at monroecounty-fl.gov/irmarecovery.

PREVIOUS RELEVANT BOCC ACTION: NA

CONTRACT/AGREEMENT CHANGES:
NA

STAFF RECOMMENDATION: APPROVE

DOCUMENTATION:

Citizens Advisory Task Force Resolution to BOCC only 08-01-19 signed
NOTICE OF 10-day comment period
NOTICE OF PUBLIC MEETING 8 21 19

FINANCIAL IMPACT:

Effective Date: PENDING

Expiration Date:

Total Dollar Value of Contract: NA
Total Cost to County: None
Current Year Portion: NA
Budgeted: No
Source of Funds: NA
CPI:
Indirect Costs:
Estimated Ongoing Costs Not Included in above dollar amounts:

Revenue Producing: NA **If yes, amount:**
Grant: $2,500,000
County Match: $ 0
Insurance Required: 0

Additional Details:

REVIEWED BY:

Helene Wetherington	Completed	07/31/2019 12:22 PM
Assistant County Administrator Christine Hurley		Completed
	08/05/2019 9:34 AM	
Christine Limbert	Completed	08/05/2019 3:51 PM
Budget and Finance	Completed	08/06/2019 11:19 AM
Maria Slavik	Skipped	08/05/2019 1:26 PM
Helene Wetherington	Skipped	08/06/2019 9:12 AM
Kathy Peters	Completed	08/06/2019 11:31 AM
Board of County Commissioners	Completed	08/21/2019 9:00 AM

CDBG-DR Infrastructure Repair and Mitigation Program

Public Hearing August 21, 2019

Appendix E: Monroe County Pilot Roads Project Report (January 2017)

January, 2017

MONROE COUNTY PILOT ROADS PROJECT:

THE SANDS AND TWIN LAKES COMMUNITIES

Prepared for:

Monroe County, Florida

Prepared by:

ERIN L. DEADY, P.A.

and

WSP | PARSONS BRINCKERHOFF

Contents

1 Executive Summary 1

2 Introduction 4

3 Part I: Methodology and Technical Background 8
3.1 Tidal Flooding Assessment 8
3.2 Climate Change and Sea Level Rise 11
3.3 Engineering Design Assessment 13

4 Recommendations 23
4.1 Establishing a Baseline for Decision-Making 23
4.2 Example Decision-Making 24
4.3 Stormwater Management Design Alternatives and Recommendations 27
4.4 Pavement Design and Inundation 28
4.5 Final Technical Recommendation 29

5 Part II: Legal and Policy Analysis 32
5.1 Legal Analysis/Background 32
5.2 Case Studies 38
5.3 Recommendation on Policy 42
5.4 Conclusions 46

6 Appendix 48
6.1 Appendix 1 – Methodology for Development of Flood Level Estimates for the Two Communities 48
6.2 Appendix 2 – Draft Ordinance 50

Figures

Figure 1 - Communities Selected for the Pilot Project 4
Figure 2 - Study Location - Twin Lakes Community, Key Largo 5
Figure 3 - Study Location – Sands Community, Big Pine Key 5
Figure 4 - Project Technical Work Flow 7
Figure 5 - Vaca Key Tide Gauge Water Level - 1996 to 2016 9
Figure 6 - 2015 Tidal Record for Vaca Key Tide Gauge – Highlighting 2015 Event 10
Figure 7 - Sea Level Rise Projections - Southeast Florida Regional Climate Change Compact 12
Figure 8 - Stormwater Pumping Equipment 17
Figure 9 - Control Box - Big Pine Key 17
Figure 10 - Current Elevations in the Twin Lakes Community 18
Figure 11 - Current Elevations in the Sands Community 19
Figure 12 - Conditions Potentially Impacting Roadway Design (Conceptual) 21
Figure 13 - Sample Process Evaluation 46

Tables

Table 1 - Analysis of Tidal Water Levels for the Vaca Key Tide Gauge and Estimated Levels for Two Pilot Communities 11
Table 2 - Tidal Condition and Flooding Estimates for Two Communities for Two SLR Values 13
Table 3 - Tidal Water Elevations and Recurrence Periods for Big Pine Key 15
Table 4 - Tidal Water Elevations and Recurrence Periods for Key Largo 16
Table 5 - Cost Estimates for Reconstructing Roadways in the Two Communities 19
Table 6 - Design Scenario Options - Noting Differences 26

1 Executive Summary

This report summarizes the preliminary results of a Pilot Project conducted in Monroe County, Florida to assess the implications of sea level rise on its roadway improvement program in two communities. This effort was motivated by two significant events. The first was the release of the County's GreenKeys! Sustainability Action Plan ("GreenKeys! Plan") which made recommendations to address climate and sustainability issues throughout the County. The second was the King Tide Event of 2015, which due to a combination of tidal and storm conditions, caused long-term, disruptive flooding.

The County conducted this pilot study and engineering technical analysis based on a data-driven method to identify the appropriate design response to potential sea level rise effects on roadways for two communities. The County's Team developed an approach to define alternatives for road improvements in the two pilot communities based on several elements:

- Assessed past tidal events in the Keys by analyzing a 20-year historic tidal record and determining the statistical probability of tidal flooding for certain events based on that assessment.
- Used the Intergovernmental Panel on Climate Change ("IPCC") AR5 Median and United States Army Corps of Engineers ("USACE") High sea level rise scenarios, used by the Southeast Florida Regional Climate Change Compact ("Compact"), to identify potential rates of increase expected over a 25 year road improvement project lifetime for the road improvements. These values were then added to those derived from past events to define flooding recurrence scenarios for the year 2040.
- Developed four design response strategies (6", 12", 18" and 28" of road elevation) to evaluate flooding impacts and the benefits gained from those responses.
- Compared design scenarios to tidal flooding recurrence in 2015 and in 2040 to define the performance of design options under various scenarios.
- Developed design cost estimates for the various identified road elevation scenarios to understand the relative differences in cost between various design options.
- Provided recommendations on implementation strategies for future road elevation and drainage improvements.

Part I of this Final Report includes a thorough discussion of the data collected, analyzed and used to develop a technical recommendation for road improvement projects in the Twin Lakes and Sands Communities that can also be applied for other road improvement projects. Stormwater solutions and designs are discussed as well as local factors that may influence design options such as elevations of adjacent properties and impacts to environmentally sensitive lands. Ultimately Part 1 of the Report provides a technical basis for harmonizing future sea level rise impacts and a threshold for flooding (in terms of days not exceeded) that can be replicated. Appendix 1 supports the implementation of the Technical Recommendations in Section 4.5 and creates a standard methodology for developing the elevations of future road improvement projects based

on 1) a future sea level rise projection and 2) not exceeding a certain number of days of flooding annually. Combined these two values create the target design elevation outlined in the Appendix 1 methodology.

Part 2 of this Final Report includes a legal and policy overview including the state of the current law related to infrastructure, flooding and sea level rise implications. Applicable state law and case law are analyzed to answer questions related to a local government's duties for levels of service related to roads. An overview of case studies from other local governments (and agencies) that have begun to address levels of service related to flooding or future flooding, and have adopted policies doing so, is included in Part 2. Appendix 2 has been developed as a Draft Ordinance for future consideration in adopting this policy framework. Drawing upon the legal and policy foundation, and applying it to the technical work performed in Part 1, a policy framework is described which is based on a three-pronged approach to:

1. Define a target "Design Criteria"
2. Evaluate a list of Local Conditions that may affect implementation
3. Create a designation for areas where the design criteria cannot be met

In Section 4.5, the Final Report includes recommendations for elevations in the Twin Lakes Community in Key Largo and the Sands Community in Big Pine Key as follows:

- In the Twin Lakes Community, the recommendation is that portions of the roadways be raised to approximately 5" of elevation NAVD88 (4.4 inches as noted in technical material) to provide flooding relief, and extend the life of the road to 2040.
- In the Sands Community, the recommendation is that portions of the roadways be raised to approximately 11" of elevation NAVD88 (10.3 inches as noted in technical material) based on a similar assessment.

The full list of steps in the Methodology can be found in Appendix 2 to arrive at these recommended elevations. When accounting for sea level rise and a point at which flooding does not exceed 7 days annually, the data resulting from evaluating the 6" and 12" scenarios identified in Section 3.3 show a conceptual picture of what elevating to 5" and 11" will actually require. In summary:

	Scenario Considered	Elevation Length	Conceptual Cost
Recommendation for Twin Lakes Community in Key Largo of 5"	6"	.3 Miles	$0.92 Million
Recommendation for Sands Community in Big Pine of 11"	12"	.34 Miles	$2.63 Million

Note: Scenario Considered means the scenario evaluated in this analysis that is the closest to the recommendation when applying the Methodology in Appendix 2.

Finally, the GreenKeys! Sustainability Action Plan (accepted by the Board of County Commissioners in April 2016) includes recommendations that support this Pilot Project, and also recognizes that a larger countywide roads effort is needed to fully understand the planning and

economic implications of comprehensively planning for future County road improvement projects. Lessons learned from this effort have been valuable, but the larger County effort will be better able to provide the information needed to support a fully developed capital planning program going forward. That said, this Pilot Project, and the specific recommendations identified for the two communities resulting from it, serve as a basis to move forward to the design and implementation phases. This will continue the process of developing valuable results-oriented information for future use.

2 Introduction

Monroe County accepted the GreenKeys! Plan in early 2016, which made several recommendations concerning infrastructure planning in light of future sea level rise. The County also experienced flooding from higher-than-normal King Tides in 2015 and 2016, causing extended periods of flooding in some communities along the Keys. King Tides refer to the higher-than-average annual high tides that occur in the Fall each year when the moon, sun and Earth are aligned in such a way that gravitational forces produce the greatest tidal fluctuations. King Tides generally provide a preview of what the County can expect as sea levels continue to rise, but the levels experienced in 2015 were particularly high and resulted in a visual indication of what types of impacts will be seen in the future. These King Tide impacts will also be exacerbated by higher sea levels. Knowing that increased flooding from King Tides, storm events and general sea level rise will likely occur in the future, and that the County will have to address this issue countywide, the County moved forward with a "pilot effort." The goal of this pilot effort is to test methodologies for determining future flood risk scenarios and to develop a policy framework for making these decisions relative to new roadway improvement projects. Two communities were chosen for this study, one in Key Largo (Twin Lakes Community) and one in Big Pine Key (Sands Community). Figure 1 below identifies the locations of the two communities chosen. Specific roadway areas within those communities were further defined as the primary area of focus (see Figure 2 and Figure 3).

Figure 1 - Communities Selected for the Pilot Project

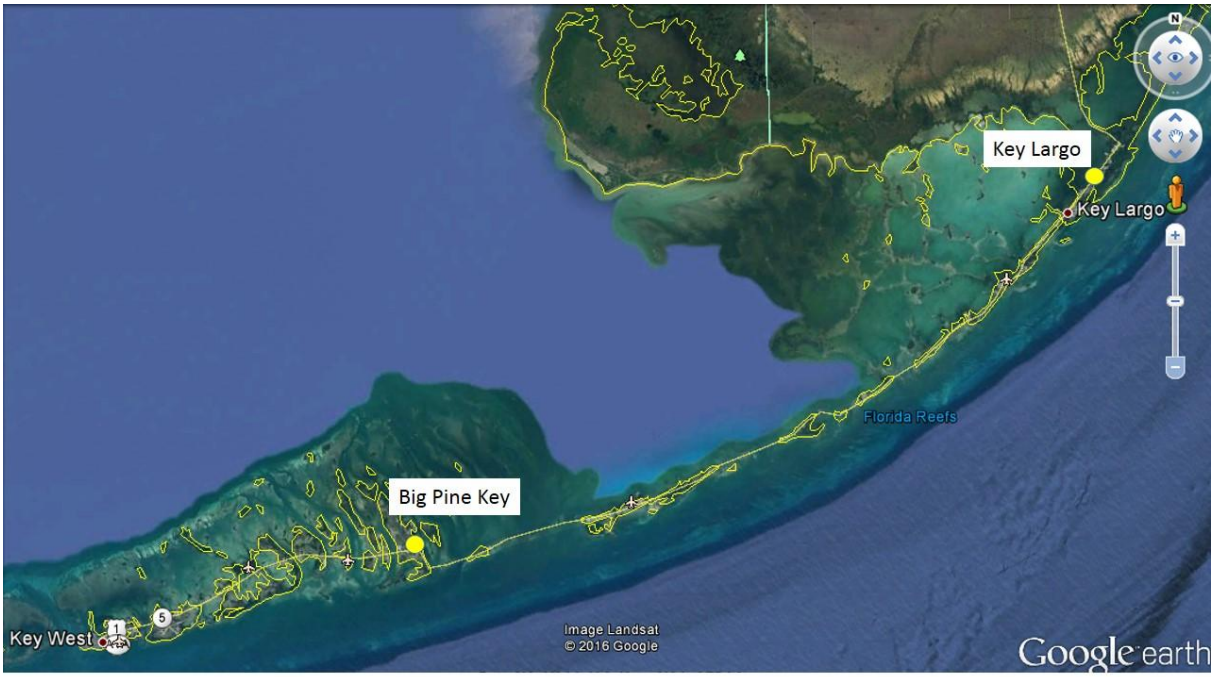

Figure 2 - Study Location - Twin Lakes Community, Key Largo

Figure 3 - Study Location – Sands Community, Big Pine Key

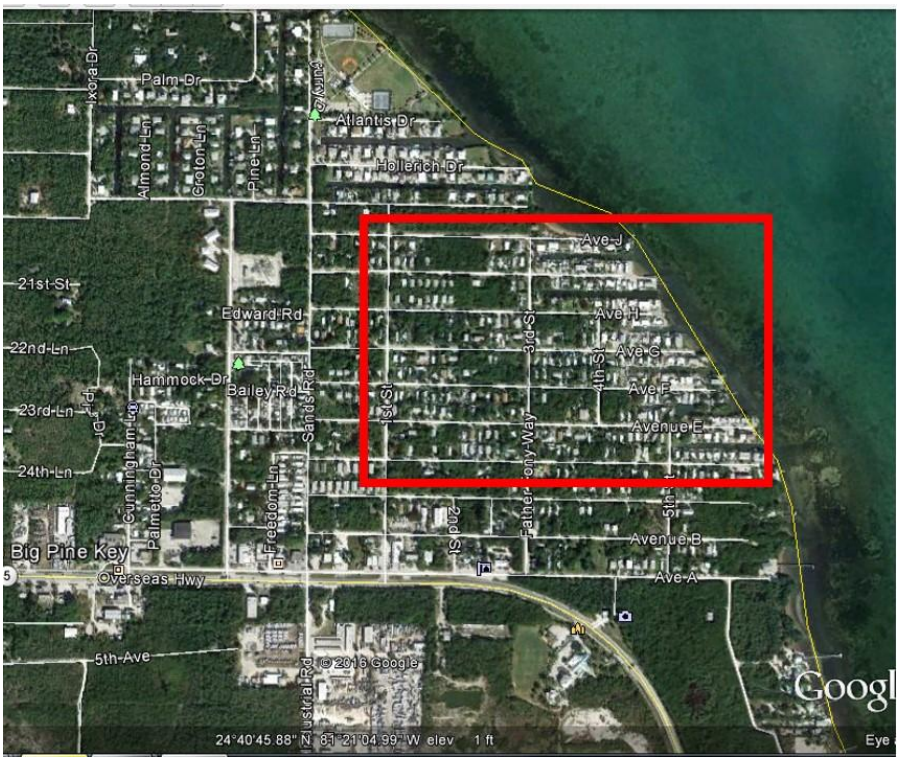

County road improvement projects should consider the following questions:

- How are levels of service established in the face of uncertainty with a changing climate and projected levels of sea level rise that are based on a range of future conditions?
- What is a reasonable level of service for County road projects impacted by flooding and the amount of time a given road is inundated?
- What would be considered a cost-effective response given the needs of these communities now, the broader needs of Monroe County in the future, and the limited resources the County has or will have to address capital improvements?
- What is a model policy approach for future decision-making on road levels of service countywide?

Part I of this report presents the history of, and the technical work performed for, the assessment of the potential responses to tidal flooding in the two County communities. This work reflects pertinent GreenKeys! Plan recommendations to better plan for future road flooding risk. The focus of this effort has been to develop a method to estimate future tidal flood potential, based on analyses of historical events and projected levels of sea level rise, as well as develop conceptual design and cost estimates for road and drainage improvements in the two communities.

Final designs for these two communities serve as a pilot effort to take lessons learned from this process and extend them to other County road improvement projects. The analysis for this project is specific to the two pilot communities: Twin Lakes Community in Key Largo and the Sands Community in Big Pine Key.

Part II of this report includes a legal overview of the duties and responsibilities for local governments to maintain and upgrade roads, as well as an approach for a policy direction, outlining a set of factors for the County to consider in establishing service levels for future flood risk related to road projects. Many of the outcomes of this project may be translated to other road improvement projects, which is why a comprehensive policy addressing future sea level rise in road design projects is also included.

The GreenKeys! Plan indicated that approximately 144 miles of roadways may be exposed to nuisance flooding by 2030 under the “low” sea level rise scenario (3-7 inches), and that 188 miles of roadways may be exposed by 2030 under the “high” sea level rise scenario (9-24 inches).[1] Thus, design criteria will need to consider a larger countywide need to assure that appropriate sea level rise impacts are considered as part of project decision-making, as well as include the challenge of limited resources.

[1] Note, these sea level rise scenarios modeled in the GreenKeys! Plan, were based on those being utilized at the time by the Southeast Florida Regional Climate Compact. Those scenarios were utilized from 2010-2015 and were updated using a different methodology by the Compact in 2015. For the purposes of the GreenKeys! Plan analysis identifying road areas to be impacted by nuisance flooding in 2030, the difference between the previous and current sea level rise projections being used by the Compact is de minimis.

Recommendations from the GreenKeys! Plan relevant to this study include:

- 1-19, "Pilot project to conduct Comprehensive Feasibility Study for Enhanced Stormwater and Tidewater Criteria (prioritizing areas) for near-term areas subject to inundation risk, including nuisance flooding (in two locations).
- 2-14, "Conduct a countywide roads analysis to identify near-term roads subject to inundation risk, including nuisance flooding. This will include researching where related green infrastructure would be appropriate. Increase the percentage of funding invested in green infrastructure."
- 2-36, "Ensure that all new nuisance flooding data informs future road decisions. These data will also need to be considered for future road decisions. This will require coordination with FDOT for impacts to State Roads (U.S. Highway 1).

The technical analysis in this project can be used as a framework to make future road improvement decisions. The steps or tasks undertaken to complete this work are shown in Figure 4. In essence, the analysis reviewed existing tidal flooding over the past 20 years, incorporated rising water levels associated with sea level rise, determined how roadway design factors may have to be modified due to changing future conditions, considered use of limited resources, and then summarized how that information could be used to guide County policies.

Figure 4 - Project Technical Work Flow

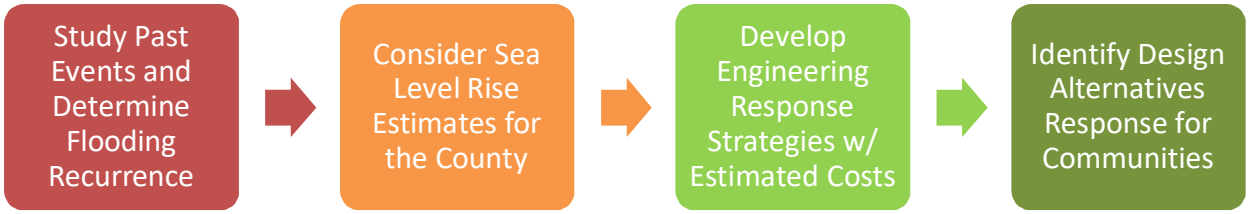

3 Part I: Methodology and Technical Background

Study Past Events and Determine Flooding Recurrence

3.1 TIDAL FLOODING ASSESSMENT

The purpose of the first task to "Study Past Events and Determine Flooding Recurrence" was to conduct an analysis of past tidal events that occurred in the study areas to develop an understanding of how tidal influences and events have affected the two pilot communities. The intent was to develop a data-driven assessment based upon past events and inform decisions on how the County may respond to similar events in the future. The assessment focused on determining how past events, including the events that occurred in Fall 2015 and 2016, should be considered in terms of understanding how tidal and other flooding events have impacted Monroe County communities.

A Note about the Vertical Datum Value Used in this Report

A vertical datum is a reference measurement to identify elevations in comparable units from around the world. The units used in this report are for the North American Vertical Datum from 1988 – or the NAVD88 datum. One interesting thing to note on the use of this datum is that for many points in the Florida Keys, the measure for Mean Sea Level is less than zero. The graphic above identifies how the relative measures of elevation can be considered, with elevation 0 being the low point of the roadways in the two communities. In the Sands Community, an elevation of 0 is near the intersection of Avenue J and Father Tony Way and in the Twin Lakes Community, elevation 0 is near the intersection of Shaw Drive and Crane Street.

The water elevation data reviewed included a summary of tidal events from the Vaca Key National Oceanic and Atmospheric Administration ("NOAA") Tide Gauge 20 year tidal record to complete an analysis of tidal flooding events in the County. The Vaca Key Gauge was used because it is the most proximate to both study areas. The work included an assessment of the extended period of record for the Vaca Key Tide Gauge, which is shown in Figure 5.

Figure 5 - Vaca Key Tide Gauge Water Level - 1996 to 2016

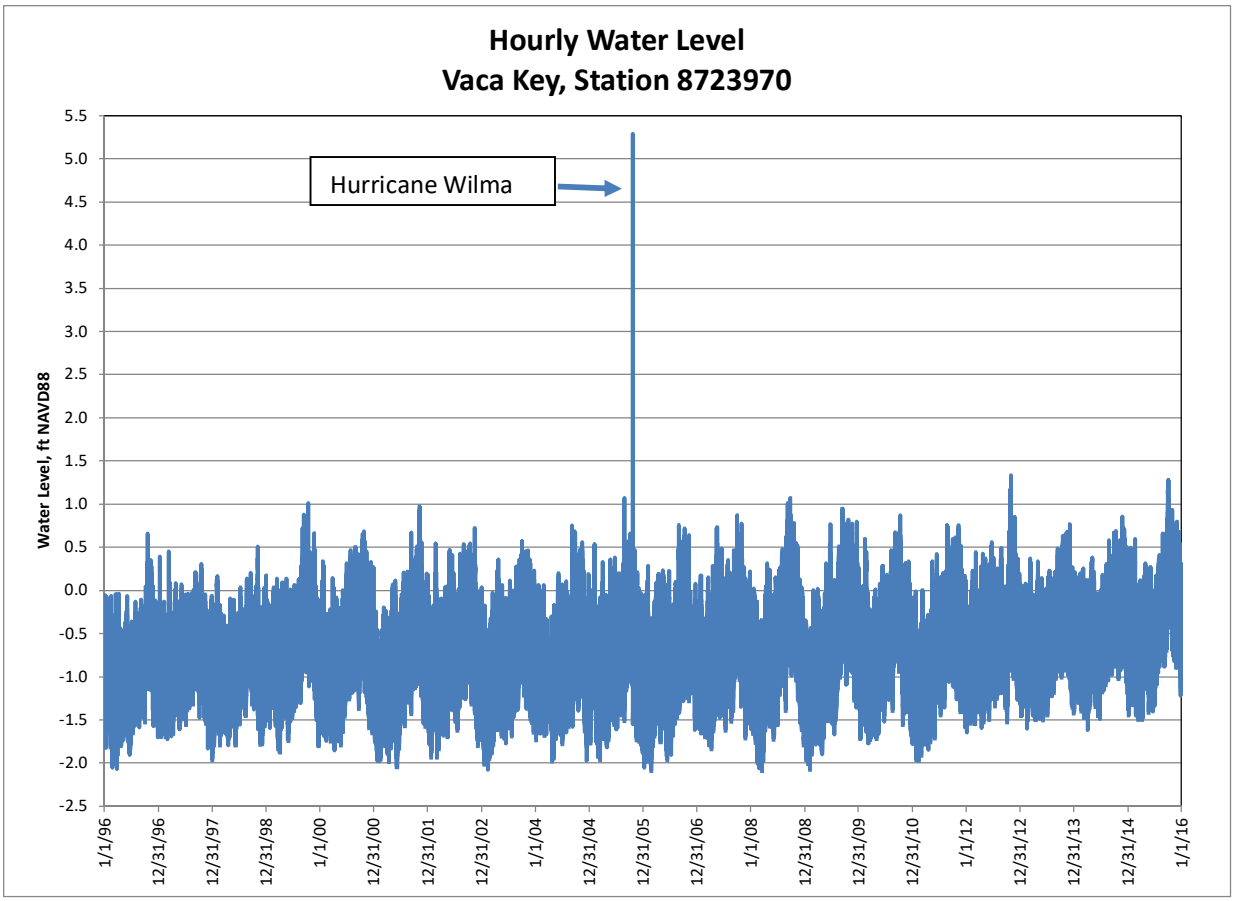

The analysis also reviewed data related to the Fall 2015 flooding event and the factors that went into the flooding caused by that event. The tidal record for that event is included in Figure 6. One primary conclusion from the review of the Fall 2015 event is that the weather conditions in the region resulted in shifting the average tidal conditions significantly higher for numerous days over the month. This means that during the events noted in the two pilot communities, the overall tidal effects shifted higher by a few inches, resulting in low tides during this period not low enough to clear the flooding experienced. The visual effect was extended periods with tidal water on community roadways. While Fall 2016 was a more recent King Tide event, Fall 2015 was chosen because predicted and observed water levels were higher, reflecting a more extreme condition for comparison purposes and alternatives evaluation.

A statistical analysis was completed for the 20-year tidal record to develop an understanding of the effect of past tidal conditions on flooding in Monroe County. This was done to further characterize how tidal events, even those affected by non-hurricane conditions, have impacted the two communities over the past two decades creating a baseline. This baseline assessment acts as a point of reference to project forward into the future while also considering sea level rise effects on these conditions.

Figure 6 - 2015 Tidal Record for Vaca Key Tide Gauge – Highlighting 2015 Event

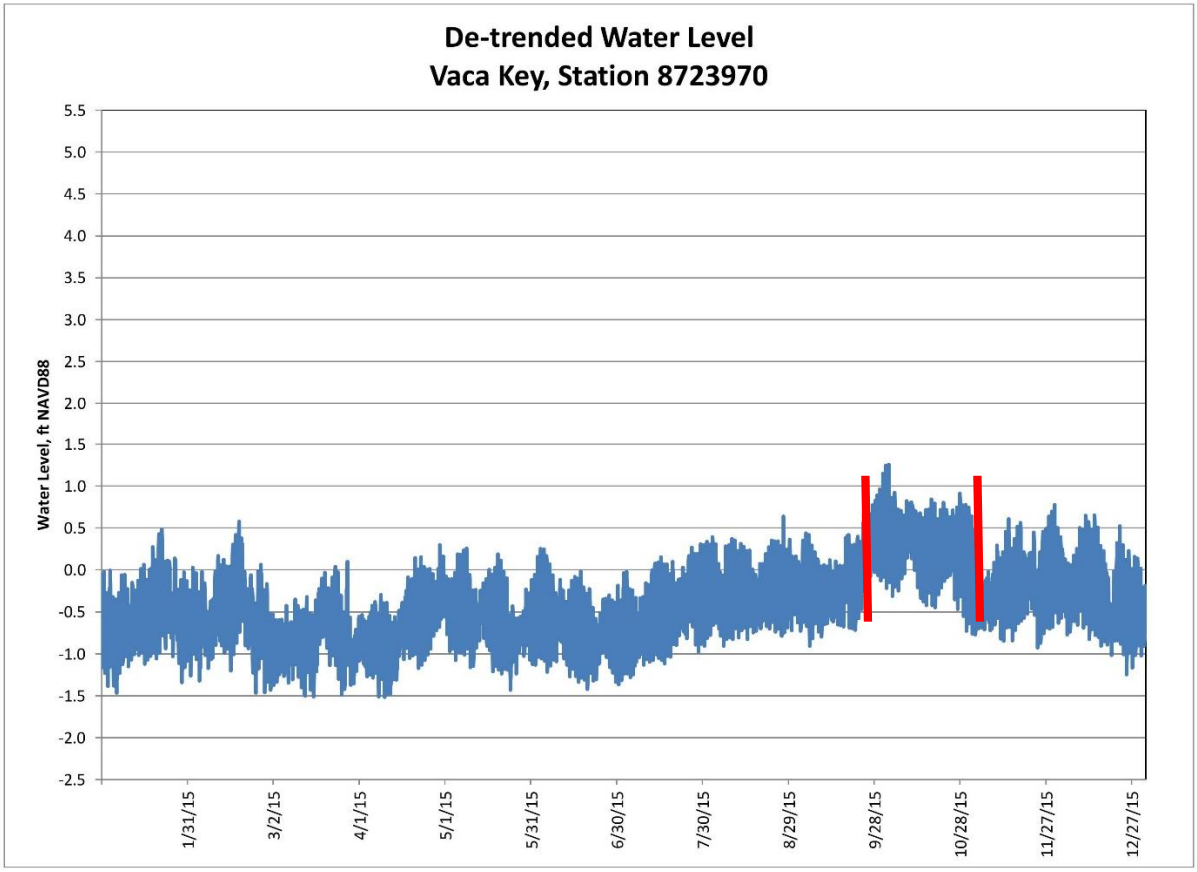

Note: The graphic above depicts the tidal record for the year 2015. The title of the figure identifies "de-trended" data which describes a method applied by the Team to clarify the tidal effects over the 20-year period, in part by removing the incremental sea level rise that occurred during that period. The time period between the two red lines is the start and end point of the 2015 event described throughout this report.

Table 1 shows the results of the initial analysis performed for this report, outlining the work to identify return period events and flood levels for the two pilot communities. Some notable differences in the table are attributable to the overall tidal effects in each area – with the tidal values being generally higher for Big Pine Key based upon its location, and less for the Key Largo community.

The information in Table 1 outlines the number of hours of flooding at various elevation levels for the two communities, converting those values into hours of inundation, which is then averaged over the 20-year analysis period to identify flood probabilities. As an example, a flood level of approximately 1.7 inches (NAVD88) at the Vaca Key Tide Gauge translates into approximately 7 days of flooding per year (24 hours of flooding), which is used as a metric in later design steps of the project. The values highlighted in green are used as input on future design decisions.

Table 1 - Analysis of Tidal Water Levels for the Vaca Key Tide Gauge and Estimated Levels for Two Pilot Communities

Vaca Key	Twin Lakes	Sands	Twenty Year Record		Average Per Year	
Water Level (in, NAVD88)	Water Level (in, NAVD88)	Water Level (in, NAVD88)	Number of Floods (#)	Inundation (hr)	Number of Floods (#)	Inundation (days)
-1.3	-4.0	1.9	159	16,416	8.1	35
1.7	-1.0	4.9	45	3,600	2.3	7
4.7	2.0	7.9	12	744	0.6	1.5
7.7	5.0	10.9	2	120		

Note: The first column shows various water levels at the Vaca Key Tide Gauge. The next two columns show when flooding occurs in the community, but due to differences in elevation, topography, etc., flooding occurs at different levels. The negative values are in relation to the NAVD88 datum, where zero is a point approximately equal to the low point of the roadways in the two communities.

3.2 CLIMATE CHANGE AND SEA LEVEL RISE

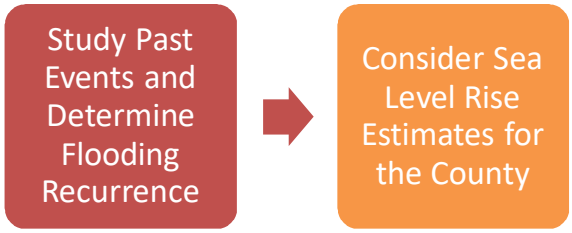

Climate change is a term used to describe warming of the Earth's atmosphere, which changes weather patterns and alters the physical conditions of the Earth. One such change resulting from atmospheric warming is sea level rise, which occurs due to ice melt, thermal expansion of water, and other factors.

A concern in Monroe County, as a coastal community, is the long-term effect of rising sea levels. This changing condition, combined with porous geology and tropical weather patterns, makes Monroe County unique in its greater exposure to long-term sea level rise risks. The challenge will be to develop policies that respond to these changes while recognizing the timing and uncertainties associated with such future conditions, as well as limited resources to address these issues.

Monroe County is part of the Compact, which provides information to help local government decisions throughout the four County lower east coast region. The Compact released in late 2015 a document that outlined updated sea level rise values for three scenarios in southeast Florida[2]. These curves are noted in Figure 7. The challenge of using three potential future conditions, particularly with regards to infrastructure planning, is that there is the possibility of overspending or underspending on improvement or protection strategies depending on which scenario is selected, and which level of sea level rise actually occurs. In reviewing Figure 7, one can see that building to the NOAA High scenario in 2040 may be overbuilding to conditions not expected for

[2] Unified Sea Level Rise Projections – Southeast Florida, October 2015.

30-40 years should the IPCC AR5 Median scenario be followed more closely. Decisions that recognize this reality and identify how to spend scarce resources in the face of conflicting needs are important in the context of planning for sea level rise.

Figure 7 - Sea Level Rise Projections - Southeast Florida Regional Climate Change Compact

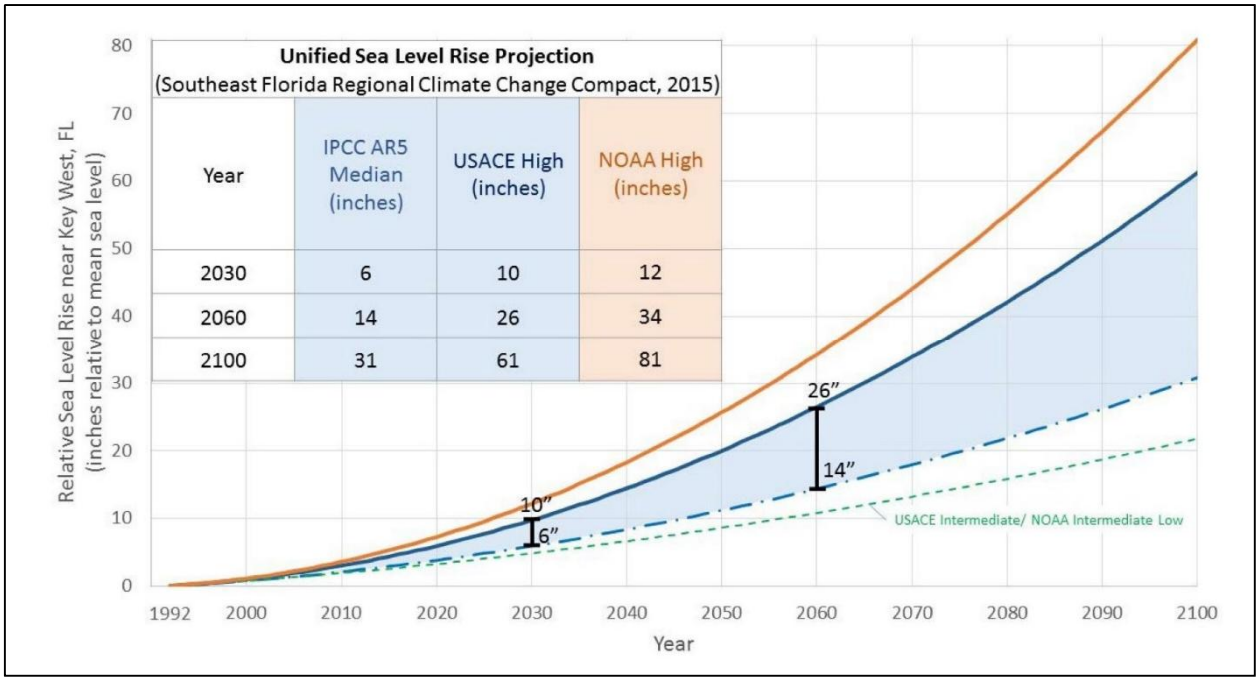

Another primary consideration in making infrastructure decisions is the life expectancy of a project. Adopting an expected project "useful or design life" ensures that investments consider how long an asset is expected to be in place before future replacement or improvement cycles are necessary, or how long an asset may have before being impacted by changing environmental conditions. This is an important perspective, as every infrastructure project should consider not only the point of impact, but also the implications of that impact on the facility, or the remaining design life. These are factors that are not a part of traditional facility design.

Data analysis was conducted to develop estimates for how sea level rise would potentially change the design approach for raising the roadways in the two communities, primarily by incorporating future sea level rise projections into decision-making. The Compact generally recommends that the IPCC AR5 Median and USACE High scenarios be used as a range for more common infrastructure planning decisions. Decisions for infrastructure or facilities with a very low tolerance for flood exposure (such as power plants) should utilize the NOAA High scenario as recommended by the Compact. For this analysis (given the routine nature of road improvements), the two recommended estimates for sea level rise of the IPCC AR5 Median and USACE High scenarios were applied to the end of the 25-year design life used as an estimate for the Pilot Project. Twenty-five years was chosen as the typical useful life for a road improvement project.

Estimates of sea level rise increase from the current 2015 levels by 5.4" (2040 AR5 Median scenario) and 10.1" (2040 USACE High scenario) by 2040. These values were added to information taken from the tidal records to develop a table of water elevations associated with various tidal inundation events that would be considered for a future design response. Table 2 identifies the calculated values for a set of events taken from the tidal record, adds the sea level rise estimates, and identifies the water elevations to be considered as a part of roadway and drainage design for this project.

Table 2 - Tidal Condition and Flooding Estimates for Two Communities for Two SLR Values

	Existing		Future Design Levels Considered			
	Values (in. NAVD88)		2040 Median SLR (in.)		2040 High SLR (in.)	
	Big Pine	Key Largo	Big Pine	Key Largo	Big Pine	Key Largo
Mean Sea Level	-9.0	-11.0	-3.6	-5.6	1.1	-0.9
Mean Higher High Water	-1.1	-7.0	4.3	-1.6	9.0	3.0
2015 Event Avg. Elevation	5.3	3.3	10.7	8.7	15.3	13.3
2015 Event High Elevation	16.1	14.1	21.5	19.5	26.1	24.1
Est. Month Flooding	1.9	-4.0	7.3	1.4	12.0	6.0
Est. Week Flooding	4.9	-1.0	10.3	4.4	15.0	9.0
Est. Day Flooding	7.9	2.0	13.3	7.4	18.0	12.0

Note: This table highlights the negative values associated with NAVD88 elevations in the study area. Reviewing the data to note changes or differences in elevations and to identify elevations that address certain flood recurrences is the best use of the table.

This data formed the basis for design recommendations that were developed and assessed for this project, a process that is outlined in the next section of the report.

3.3 ENGINEERING DESIGN ASSESSMENT

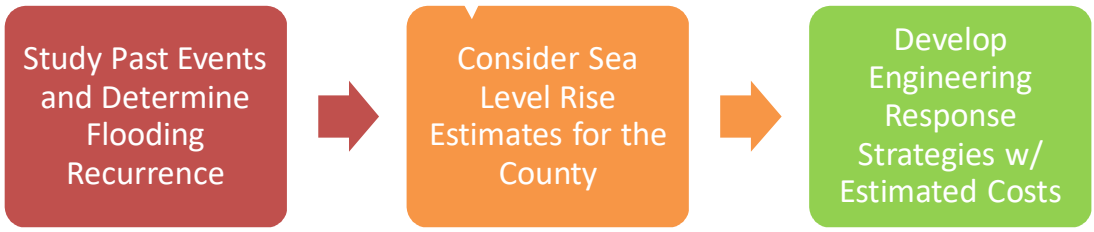

The next Task performed was the "Development of Engineering Response Strategies with Estimated Costs." In order to identify a set of design scenarios that could address current and potential future conditions as a means of defining the benefits and cost of strategies that would address long-term sea level rise and tidal conditions. This was an important consideration, given that conditions present in these two communities will be similar to others in the County.

Flood Levels and Recurrence

The Team evaluated not only a particular level of sea level rise by 2040, but also a range of flooding days annually at a given flooding level. The goal is to provide information related to each flood level scenario that tracks the amount of time that level will occur in any one year. Flooding on a road for 30 days in one year versus flooding for 7 days or a single day creates a very different impact on the community, so the "days of impact" are also considered over a range of options.

King Tides of 2015 and 2016

In the fall of 2015, both pilot communities experienced levels of tidal inundation over numerous days due to multiple factors. The primary effect was the time of year, when October typically brings the highest King Tides. Additionally, this effect can be compounded by wind-related impacts or surge from events such as tropical storms or hurricanes. In terms of comparing known flooding conditions in both the Fall of 2015 and 2016 within the two communities, NOAA data from the Vaca Key Tide Gauge show that flooding levels in the Fall of 2015 were on average greater than 2016, so the Fall 2015 was chosen for a comparison between sea level rise scenarios and a recent event-driven impact. Anecdotal information supplied by area residents noted that the Fall 2015 condition had not been seen before (the extended period of flooding) and historical data shows that level had a very low probability of occurring (less than 3% in any given year). But given the fact that people saw the impact of that level of flooding, scenarios were developed and compared to this condition as well as future sea level rise scenarios. Part of the comparison includes what relief various alternatives might provide against this extreme condition.

Design Scenarios

The focus of this Task was also to develop multiple design scenarios for raising the roadway to address tidal flooding issues. The intent of identifying varying roadway elevation scenarios that would address several inundation levels was to pursue an option which would avoid flooding and develop a stronger understanding of the cost variations for each design alternative. The Team selected elevations that would be sufficiently different, as to enable comparison of options to address flooding and to compare project costs associated with the different flood levels. For this exercise, the following road elevations were tested: 6", 12", 18" and 28" (NAVD88 elevations), meaning all roadways in the study areas lower than these elevations would be elevated to these various levels for analytical purposes. As a reminder, the relative low point in each community is approximately elevation 0" in NAVD88 meaning that increasing elevations by 6" translates to those areas being raised by a comparable amount.

Table 3 and Table 4 represent the range of conditions based upon the use of the 2040 sea level rise scenarios for the IPCC AR5 Median and USACE High estimates. A number of considerations are important when looking at these tables:

- The columns represent the duration of water elevation conditions for the scenarios shown. Mean Sea Level and Mean Higher High Water ("MHHW") represent a general sea condition and average high tide respectively. This is followed by the calculated analysis results of recurrence of flooding elevation ranges from 30 days down to 1 day annually.

- The Average Fall 2015 event column shows the calculated average level of flooding that occurred over the duration of the "King Tide" event in 2015 from September 24th to October 31st.
- The Max Fall 2015 event column shows the highest level the water was recorded around October 4th during the 2015 King Tide event.
- Rows represent the following:
  - Row 1 – current estimated flood levels from the 2015 Tidal Record, providing a "base condition" for comparison with the IPCC AR5 Median and USACE High sea level rise scenarios.
  - Row 2 – those same calculated flood levels, but with each value having been increased by the sea level rise estimate to occur between now and 2040 for the IPCC AR5 Median scenario (5.4").
  - Row 3 – flood levels in row 1 increased by 10.1", which is the estimated sea level rise value from between now and 2040 for USACE High Scenario.

Numbers within Table 3 and Table 4 represent the inches in elevation of the water levels, in the tidal datum NAVD88 values. Negative values are presented as noted throughout the report due to the NAVD88 reference and the fact that many areas of coastal Florida are at a level below that base elevation. The base level for community roadways generally range from 0 to over 28" above NAVD88, as can be seen in Figure 10 and Figure 11.

Table 3 - Tidal Water Elevations and Recurrence Periods for Big Pine Key

Sands Community, Big Pine Key All Water Levels Shown in Inches NAVD88							
	MSL	**MHHW**	**30 Days Annually**	**7 Days Annually**	**1 Day Annually**	**Avg. Fall 2015 Event**	**Max Fall 2015 Event**
2015 - Tidal Record	-9.0	-1.1	1.9	4.9	7.9	5.3	16.1
2040 Med SLR (+5.4")	-3.6	4.3	7.3	10.3	13.3	10.7	21.5
2040 High SLR (+10.1")	1.1	9.0	12.0	15.0	18.0	15.3	26.1

Table 4 - Tidal Water Elevations and Recurrence Periods for Key Largo

Twin Lakes Community, Key Largo All Water Levels Shown in Inches NAVD88							
	MSL	**MHHW**	**30 Days Annually**	**7 Days Annually**	**1 Day Annually**	**Avg. Fall 2015 Event**	**Max Fall 2015 Event**
2015 - Tidal Record	-11.0	-7.0	-4.0	-1.0	2.0	3.3	14.1
2040 Med SLR (+5.4")	-5.6	-1.6	1.4	4.4	7.4	8.7	19.5
2040 High SLR (+10.1")	-0.9	3.0	6.0	9.0	12.0	13.3	24.1

Note: The tables show those values for some key conditions or return period events that were used to derive potential roadway design levels that matched predicted water levels. It is similar material to what is presented above, but reoriented to show various water levels. Negative values, as noted throughout, are a result of the elevation datum applied on this project. The reader can review the table to note conditions that would be addressed through building the roadway to a certain elevation. As an example, building the roadway to an elevation of 6" NAVD88 would be higher than the calculated average 2015 event elevation in both communities (3.3 inches in the Twin Lakes Community and 5.3 inches in the Sands Community) – meaning the low tides would enable the water to clear from the roadway.

Stormwater Management

Another element of roadway design is stormwater management, which will be required to meet state and federal water quality standards. Elevating road levels will protect against various tidal flooding events, but areas surrounding roadbeds will need proper drainage to manage floodwaters and stormwater runoff and prevent adjacent properties from flooding.

There are various drainage infrastructure options available for roadway improvement projects, such as French drains, injection wells, or oil-grit separators and pumping into surface waters. Ultimate design is dependent upon a number of factors such as the space available, water quality requirements, cost effectiveness, service requirements, groundwater levels, and soil permeability. These factors limit the types of designs that can be implemented in various areas. For example, higher groundwater levels and poor soil permeability in low lying areas will limit the feasibility of French drains and injection wells. These conditions are expected to deteriorate with rising sea levels, as encroaching ocean water will raise the water table and reduce drainage capacity of these types of systems. In these cases, pumps would likely be required to move the runoff out of the area. Due to local water quality and permitting requirements, this water would need to be treated before release. Figure 8 below identifies the type of stormwater infrastructure recommended in the two pilot areas, recognizing that other treatment types may be more applicable in other areas.

Pumping and treating stormwater runoff also requires additional infrastructure such as an emergency generator and control box to ensure operation in periods of loss of power. This condition is depicted as seen in Figure 8. This same type of design is already in use in Big Pine Key for wastewater and an example of a control box can be seen in Figure 9. The generator and

control box are placed along the roadway, with the generator placed above the Base Flood Elevation as identified by the Federal Emergency Management Agency ("FEMA").

Figure 8 - Stormwater Pumping Equipment

Figure 9 - Control Box - Big Pine Key

Note: Pump stations for wastewater system are similar in terms of elevation and location of the actual pumps, generator and control panel to avoid flooding impacts.

For a full description of stormwater management design options available on other similar projects, see Section 4.3 Stormwater Management Design Alternatives and Recommendations.

Development of Estimated Costs

Estimated costs for raising the roadways were based on cost data maintained by both the County and Florida Department of Transportation ("FDOT") for local roadway construction projects. It is important to note that the two communities have areas of varying elevation along the roadways in question. That is, the effort to raise roadways to meet a desired elevation would be in sections, not as one continuous effort, or as each alternative is evaluated for a higher elevation, more length of the roadway needs to be elevated.

Figure 10 and Figure 11 have been prepared to show how the elevations in the communities match the chosen design scenarios (6", 12", 18", and 28") and indicate with colors the elevations in each community that are lower than these values. This reality has implications when considering the design response to varying water levels. Specifically, designing the roads in the community to ensure that all roads are at least at elevation 6" results in a need to raise certain portions of the roads (0.28 miles in the Sands Community, and 0.3 miles in the Twin Lakes Community). Or, when considering raising the roads to a higher elevation such as 12", this means that the roadways included in the 6" section will need to be raised to 12", but other additional roadways will also need to be raised to reach that elevation.

Raising roads in the communities to reach 18" or 28" of elevation would also have an expanded roadway length that would need to be raised to reach those target elevations. Therefore, each subsequent move to raise roads to a target elevation means that this changes the elevation, but also the extent (linear mileage) of roadways that would need to be improved. This condition is generally represented in Figure 10 and Figure 11 showing how incremental increases in design heights also require increases in the lengths of roadways that would need to be reconstructed to address those identified flood elevations.

Figure 10 - Current Elevations in the Twin Lakes Community

Figure 11 - Current Elevations in the Sands Community

Estimated costs for elevating the roadways in the two communities were developed based on information provided by Monroe County and a review of construction costs for other similar local projects. Table 5 summarizes the cost estimates for raising the roadway profiles identified within the pilot area for each community.

Table 5 - Cost Estimates for Reconstructing Roadways in the Two Communities

Twin Lakes Community - Key Largo		
	Length of Roadway Requiring an Elevation Increase for Noted Water Levels	Total Elevation / Reconstruction Cost
6"	0.3 miles	$0.92 million
12"	0.7 miles	$4 million
18"	0.77 miles	$5.8 million
28"	0.91 miles	$7.3 million
Sands Community – Big Pine Key		
6"	0.28 miles	$2.22 million
12"	0.34 miles	$2.63 million
18"	1.29 miles	$8.9 million
28"	1.46 miles	$10.5 million

The engineering work to develop the estimates for construction are noted in the attached appendices and are included for reference.

The cost estimate includes a full range of construction-oriented costs including:

- Maintenance of Traffic
- Mobilization
- Design
- Construction
- 15% of costs for Construction Engineering and Inspection
- A 25% Cost Contingency
- Stormwater capture and treatment measures, as required by law

The cost estimate did not include the following:

- Right-of-Way impediments or acquisitions
- Land purchases
- Driveway Improvements
- Legal fees

Local Conditions which Constrain Road Design

While cost is an obvious constraint on road improvement projects, there are additional factors which can affect project design and the implementation of a desired roadway improvement project. These factors are often external to the direct implementation of the project, have an impact on how the final project design is developed, and how the improvement is built, and also must be addressed collaboratively with stakeholders and property owners.

For example, a road improvement project such as raising the road may require widening the road and could cause encroachment outside of the available public right-of-way ("ROW") and into private property. This land then needs to be obtained for the project to continue or the design needs to be altered to avoid this expansion and property requirement. If there is an encroachment onto private property from the implemented strategy, there will be a time/cost commitment involved with securing easements from property owners.

Another concern of private driveways and their connections to the improved roadway is that in many cases this may require altering the driveway to provide better connectivity. In short, there are a set of similar issues that would need to be addressed to raise the roadway profiles to address flooding that apply to impacts on private driveways.

Some of the primary constraining factors are identified in the list below and presented graphically in Figure 12 - Conditions Potentially Impacting Roadway Design (Conceptual), which represents a typical roadway in the Florida Keys.

Figure 12 - Conditions Potentially Impacting Roadway Design (Conceptual)

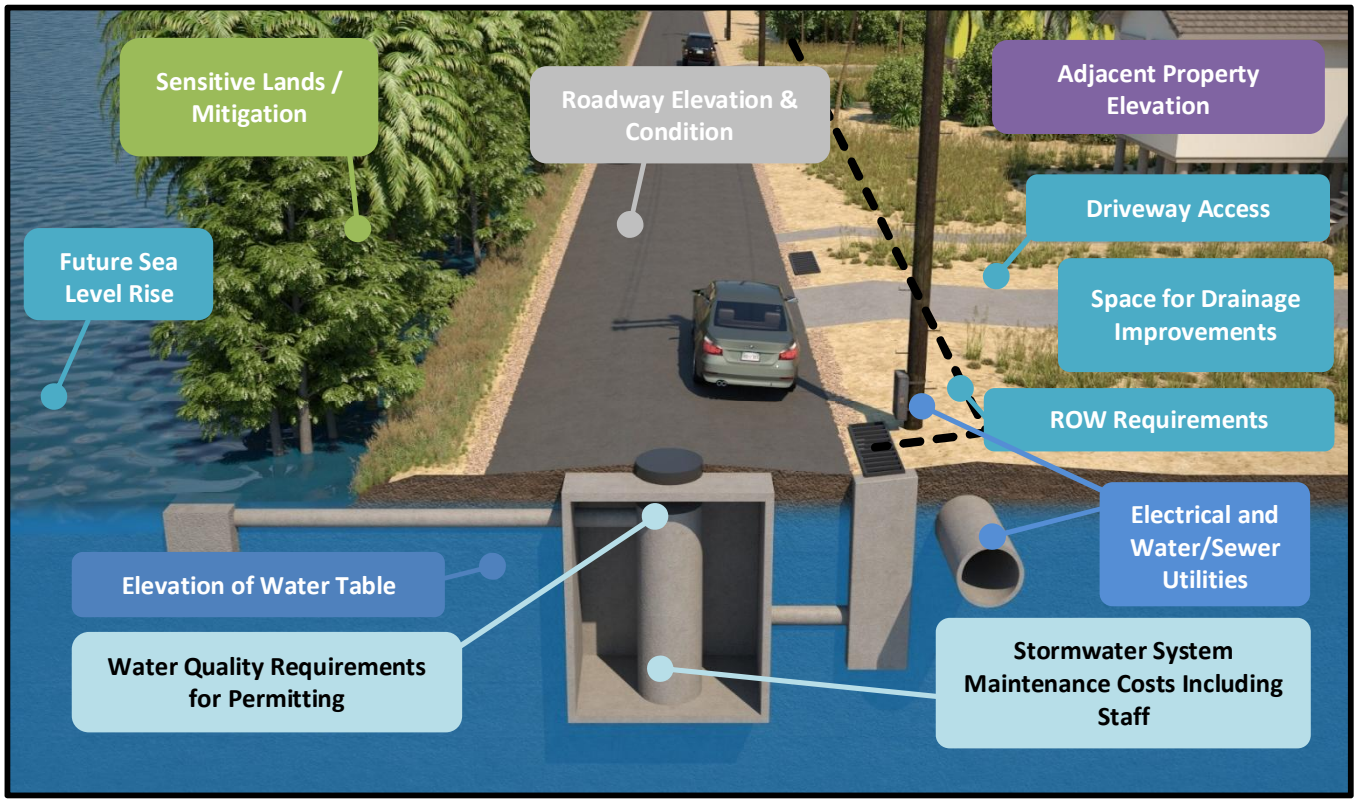

The full list of factors which may impact design and implementation include:

- Conditions
  - Future sea level rise impacts
  - Current elevation of neighboring properties
  - Current road conditions and elevations
  - Accuracy of elevation data
- Environment
  - Sensitive land
  - Harm mitigation
  - Water quality requirements and permits, including those specific to the County
- Space
  - Horizontal right-of-way
  - Horizontal space for drainage
  - Elevation of water table in relation to road elevation

- Impact
  - Private property access
  - Future maintenance cost, including staff

It is important that these local conditions be addressed, in order for a project to be successful. In the case of this Pilot Project, which only develops a conceptual design, the Team also collaborated with the South Florida Water Management District ("SFWMD"), Florida Department of Environmental Protection, and the Florida Keys National Marine Sanctuary. The Team had initial discussions with these agencies regarding stormwater drainage design from roadways from this project. These conversations were key to bringing all stakeholders to the table and ensuring their input during this very conceptual phase.

4 Recommendations

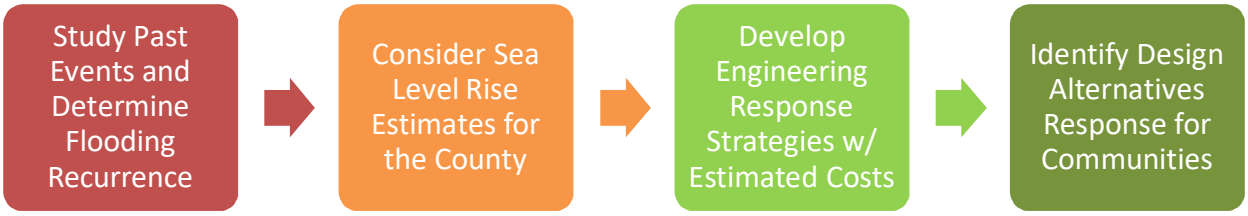

4.1 ESTABLISHING A BASELINE FOR DECISION-MAKING

Recently, the County has begun factoring sea level rise considerations into decisions related to road improvement projects. The factors already being considered on a project-by-project basis include tide levels at the location of the project, tide elevation seen on average or during the Fall 2015 King Tide event, and the projected sea level rise for a 2040 scenario. These efforts have occurred in response to public comment and were driven primarily by the events of 2015.

While these changes have already been incrementally made, the County should adopt a more comprehensive policy that takes into account site-specific conditions as warranted, given resources available. From a policy perspective, while the County may decide upon a particular level of projected sea level rise to drive design decisions, other considerations may prevent that projection from being achieved such as the local conditions identified in the previous section.

Design alternatives should be based on a number of considerations, including those from policy, data and engineering perspectives. These are fully outlined below:

- <u>From a Policy Perspective</u>
  - The issue of sea level rise will be one with implications county-wide so the effort to identify an appropriate design elevation in these two communities is important.
  - Given the broader recognition of County needs and resources, the focus of the County should be on delivering future flooding levels of service for more regular conditions than only those conditions noted in 2015. This is why a future sea level rise projection should be chosen to guide road design considerations as a primary consideration rather than responding and designing to the Fall 2015 event.
  - Use of scenarios should be tied to the useful life of a project per Policy 1502.1.1 of the Comprehensive Plan.[3] For that reason, the study team focused on the use of 2040 sea level rise projections to reflect the 25-year life of a road project.

[3] Prior to incorporating a new project to the Capital Improvements Element, Monroe County shall assure that it is reviewed for recommendations to increase resiliency and account for the impacts from climate change, including but not limited to, sea level rise and storm surge. Monroe County shall evaluate financial expenditures to fund repairs, reconditioning of deteriorating infrastructure and new infrastructure improvements within or proximate to vulnerable areas to manage public investments appropriately. Monroe County shall focus on level of service standards, as one of the points of analysis, to assure that infrastructure useful life and service expectations can be met in the face of climate change impacts.

- From a Data Analysis Perspective
  - An evaluation has been completed for impacts projected for each sea level rise scenario and recurrence interval, which translates into a specific elevation for segments of the identified roads in each community.
  - Should the IPCC AR5 Median projection be used, a certain level of relief over an extended period of time would be realized even if the high sea level rise rate were to occur. The opposite is true, that if the high projection be used, the level of relief may carry over to a future maintenance cycle or longer potential project life thus resulting in overdesign of the project.
  - Scenarios have also been compared to the Fall 2015 event to show the level of relief anticipated both from future 2040 conditions as well as what was seen last year.
- From an Engineering and Implementation Perspective:
  - Designing to any scenario should raise the current roadway profile reducing the level and duration of flooding, resulting in a passable roadway under most current and future estimated conditions.
  - Under-design and over-design considerations translate to fiscal performance trade-offs that must be considered in the context of future risk for the County.

4.2 EXAMPLE DECISION-MAKING

As an example of the options available for design - two approaches to the level of sea level rise can be considered given the uncertainties of future sea level rise values and whether the IPCC AR5 Median or USACE High sea level rise projections are realized over time.

Approach #1 uses the IPCC AR5 Median sea level rise projection of the Compact, which allows for targeting a future level of sea level rise, but also allows incremental improvements if projections track the USACE High scenario. The risk is that the road project could be considered "under-designed" and will show impacts before the estimated 2040 end of the life of the project (after 2030), but the road project could still provide some level of relief. The concept is that the base material could be constructed to support additional pavement in the future to accommodate a few additional inches of elevation, allowing for more flexible adaptation design based on what real sea level rise impacts occur versus those projected to occur. Approximately 3-4" of additional pavement could be added on top of the installed pavement as an overlay to further raise the profile of the road should actual sea level rise track the higher end of the 2040 range. This incremental process is supported by the Compact's Unified Sea Level Rise Projection (2015).[4]

[4] The designer of a type of infrastructure that is easily replaced, has a short lifespan, is adaptable, and has limited interdependencies with other infrastructure or services must weigh the potential benefit of designing for the upper blue line with the additional costs. Should the designer opt for specifying the lower curve, she/he must consider the consequences of under-designing for the potential likely sea level condition. Such consequences may include premature infrastructure failure. Additionally, planning for adaptation should be initiated in the conceptual phase. A determination must be made on whether or not threats can be addressed midlife cycle via incremental adaptation measures, such as raising the height of a sluice gate on a drainage canal. [Unified Sea Level Rise Projection Southeast Florida, October, 2015 – page 12]

Approach #2 would be to use the 2040 USACE High projection. Designing to 2040 USACE High scenario might be considered a "no regrets" adaptation strategy if the higher levels of sea level rise are realized. If future sea level rise impacts track more along the IPCC AR5 Median end of the range, using the 2040 USACE High projection could result in overdesign and a higher upfront cost to achieve a 2040 sea level rise condition. But if the road has already been elevated to a higher level, this could reduce the cost of elevation and disruption to residents in a future maintenance cycle.

Table 6 identifies how each of these approaches can be considered when combined with a road design response. The table was assembled to highlight the differences between two elevation options so that County officials can understand how different decisions can lead to various long-term conditions, and potential costs.

Table 6 - Design Scenario Options - Noting Differences

When Considering	Time Period	Design Scenario: Less than 7 Days Annually with IPCC AR5 Median SLR to 2040	Design Scenario: Max Fall 2015 Event + 2040 USACE High SLR
Cost		=~ 0.3 miles and $1M in Key Largo	=~ 0.8 miles and $6.5M in Key Largo
		=~ 0.4 miles and $2.6M in Big Pine Key	=~ 1.3 miles and $9M in Big Pine Key
Impacts from the 2015 Event	Today	=~ 6” (BP) – 10”(KL) of water - highest tide of 2015 Event	All Dry Conditions for All Events
	2040 Median	=~1”(BP)-4”(KL) of water - average 2015 conditions in impacted area	All Dry Conditions for 2015 Flood Levels
	2040 High	=~ 5” (BP)- 9" (KL) of water - average 2015 condition in area	All Dry Conditions for 2015 Flood Levels
Return Period Conditions	Today	High enough that there would be less than 1 day of flooding annually	All Dry Conditions for Today's Events
	2040 Median	High enough that there would be less than 7 days of flooding annually	All Dry Conditions for 2040 Median Events
	2040 High	7 days per year there would be =~ 5" of water on the roadway in both communities	All Dry Conditions for 2040 High Events
Change to Current Road Elevation		Adds Approximately 5"(4.4) of elevation at the lowest points in Key Largo	Adds approximately 24" of pavement elevation at the lowest point in Key Largo
		Adds Approximately 11"(10.3) of elevation at the lowest points in Big Pine Key	Adds approximately 21" of elevation at the lowest level in Big Pine
Time Period		Considers Median SLR Conditions to 2040	Considers High SLR Conditions to 2040
ROW Considerations	Today	There may be minor ROW needs in Big Pine Key	Would require ROW to implement in areas where pavement height above current is substantial

How to read the table:

- *the top of the columns (dark blue) defines the sea level rise scenario for which the estimates were developed*
- *the green section (Cost) highlights the mileage of roadway that would be raised to address these conditions, and the associated costs*
- *the pink section (Impacts) notes how the design alternative would perform when compared to the 2015 King Tide Event*
- *the orange section (Return) shows how the alternative would peform against return period events*
- *the light blue section (Change) notes the roadway elevation that would be added at the lowest points in the community where recuring flooding occurs*
- *the purple section (Time Period) identifies the sea level rise and timeframe considered for this alternative*
- *the last section (ROW) identifies whether it is estimated that private property may be required for raising the road*

4.3 STORMWATER MANAGEMENT DESIGN ALTERNATIVES AND RECOMMENDATIONS

A single stormwater management system type was recommended for implementation at the two pilot communities chosen for this project. There are, however, a number of stormwater management options available county-wide as the County looks to implement a program of roadway improvements. Those options have been outlined below for context. Selecting the appropriate drainage infrastructure is dependent upon policy, data analysis, engineering and most importantly local conditions. The available alternatives are explained in more detail below, including notes on whether the strategy would be applicable in the two locations analyzed for this study.

- **Non-pressurized French drains (open or closed).** Subsurface exfiltration-based system that discharges to the groundwater table. A French drain itself consists of a horizontally placed underground perforated 18" to 24" diameter pipe inside of a gravel and filter fabric envelope. Typical depths range from 10 to 15 feet below ground surface.
  - Engineering recommendation: Due to the reduced hydraulic head and low soil permeability of the study areas, the implementation of this system is not practical. The sea level rise makes it even less effective in these communities by further reducing the hydraulic head.
- **Pressurized French Drains (open or closed).** Same as the first option, but with a pump or lift station upstream to help move the water.
  - Engineering recommendation: Same concerns as the first option noted above. Also, additional construction and associated operation/maintenance cost of the pump system makes this option less effective.
- **Non-pressurized Drainage Wells.** A drainage well consists of a vertically placed underground 24" diameter casing pipe inside of a deeper well that discharges into the Biscayne Aquifer. Typical well depths range from 100 to 150 feet below ground surface.
  - Engineering recommendation: Due to the limited hydraulic head in the study areas, the implementation of this system is not feasible. The sea level rise makes it even less effective in these communities. Preliminary drainage calculations indicate that the effective head in the wells would exceed the roadway elevations, thereby surcharging the catch basins upstream.
- **Pressurized Drainage Wells.** Same as above, but with a pump or lift station upstream. In addition, structures would be required to house the wells, which would need to be between 4 to 5 feet above the lowest point on the road. Approximately 10 wells would be necessary for Twin Lakes Community and 9 for the Sands Community, based on preliminary estimates.
  - Engineering recommendation:
    - A sound system and a possible option.

        - Ideal when hydraulic heads are a problem.
        - With careful construction, minimum pollution.

- **Closed System (non-pressurized).** Gravity-based system consisting of closed underground piping and pollution abatement structures ("PASs") discharging into surface waters.
    - Engineering recommendation: Due to the limited hydraulic head and configuration of the study areas, this alternative is not feasible. Adjacent properties and mangroves along Shaw Drive prohibit the installation of outfall pipes into surrounding surface waters.
- **Pre-treated Closed System (pressurized).** Same as above, but with a pump or lift station upstream of the receiving water body along with a pre-treatment device, followed by a valve unit, force main and energy dissipater structure, and outfall pipe.
    - Engineering recommendation: Preferable and recommended system. The installation of this system would require easements to access the adjacent canal/bay on Father Tony Way through one of the residents' property in the Sands Community. The system would require regular maintenance to operate effectively.

The Team has recommended a pre-treated pressurized closed system as a strategy in the two communities, primarily as a cost savings measure and as a way to reduce the above-ground infrastructure requirements in the communities. The dialogue with environmental agencies with regard to the system recommendations would need to continue once engineering design recommendations are developed during the final design stage. The environmental agencies have indicated that it is a preference to install injection wells where possible, but that a pre-treated closed system may be possible and that a dialogue on sea level rise, water quality, and community impacts would have to be held to finalize the strategy and obtain required permits.

4.4 PAVEMENT DESIGN AND INUNDATION

One factor to consider in low-lying areas like the pilot communities is that, even when raising the road to said elevations, the lowest portions of the pavement will be exposed to moisture-vapor and occasionally partially inundated from high groundwater table conditions.

It is known that excessive moisture within a pavement structure can adversely affect pavement performance. Pavement structure refers to both the base material (often a compacted lime rock material in Monroe County) and also the asphalt pavement layer which serves as the roadway surface. When the moisture content in the pavement exceeds a stable amount, it may become unstable or weaken. The detrimental effects of water on the structural integrity of pavement can be technically described as follows:

- Water in the asphalt surface can lead to moisture damage, modulus reduction, and loss of tensile strength.

- Added moisture in unbound aggregate bases and sub-bases is anticipated to result in a loss of stiffness.

The effects of loss of stiffness and tensile strength, or "softening" in the pavement structure can manifest into surface deformation and cracking. Over the life of the pavement cracks become wider and more prominent, developing into channels through which moisture can flow. The result is more moisture being allowed to enter the pavement structure with increasing pavement age, which leads to accelerated development of moisture related distress and pavement deterioration. The longer pavement is saturated, the more its useful life is reduced. This translates to shorter than normal resurfacing or maintenance periods.

In the case of the pilot communities, where it may not be feasible or cost-effective to raise the roads high enough to keep the pavement from becoming saturated or exposed to constant high moisture levels, strategies for mitigating the effects of moisture include the following:

- Use materials and design features that are more resilient to the effects of moisture.
- Use drainage systems to quickly remove moisture that enters the pavement system.

Unbound aggregate bases, like compacted limestone base, are more susceptible to loss of stiffness than asphalt-treated or cement treated stabilized materials. The use of such materials allows for more clearance from the groundwater table due to the fact that they have greater strength per unit of thickness, and therefore can yield an overall thinner pavement design. Geogrids provide another method for "reinforcing" or stabilizing the base layer when exposed to high groundwater conditions. Another strategy is the use of permeable base material, in conjunction with a geotextile separation layer and longitudinal edge drainage system, to quickly remove water from the pavement, thereby reducing the amount of time it is saturated and prolonging its life expectancy. Note that to ensure good performance, these drainage systems require regular maintenance. In summary, before implementing these mitigation strategies, each should be evaluated for cost-effectiveness when compared to traditional pavements and life cycle costs.

4.5 FINAL TECHNICAL RECOMMENDATION

The previous sections outline efforts to develop a method for estimating future flood potential, based on analysis of historical events. They also develop conceptual design and cost estimates for the two pilot communities based on the four scenarios for design. This information was generated as background to help formulate a recommended design response for the two communities and identify how those design recommendations may help to define County policies moving forward.

A reality observed in the two pilot communities included significant flooding during the 2015 event, but also recurring flooding which occurs annually at different elevations. The flooding in the Key Largo Twin Lakes Community was more extensive in terms of extent and duration than that in the Sands Community during the 2015 event, which was in part due to an offshore storm system pushing water into the neighborhood. The Big Pine Sands Community typically has higher water and flood levels occur more regularly due to greater tidal influence in the area. Recommendations for county wide road elevations must be adaptable to local conditions and

also reflective of the long term tidal record. The intent of this effort was to develop a method that was specific to the full extent of potential annual tidal flood potential, not only one event which may have a limited chance of recurring. The County recognizes that representatives in these two pilot communities have requested a response to their problem, so the final recommendations outlined below are mindful of those concerns and in each case identify increased roadway elevations to address what has been observed in these communities.

Design Recommendation

The recommended design has been developed to address the two primary concerns of this project to accomplish the following:

- Improve conditions related to annual tidal flooding observed in the two pilot communities, and
- Incorporate projected sea level rise levels expected by 2040as the typical County road lasts about 25 years. Develop target design road recommendations to reflect these goals through the following:
  - Identify a roadway elevation where up to seven days annually of tidal flooding would be expected by 2040 – identified through an analysis of tidal conditions over a past 20-year period of record.
  - In developing this calculation, apply the IPCC AR5 Median sea level rise projection of the Compact.

To accomplish the above design features, the recommendation is that the project roads in the Twin Lakes Community (Key Largo) be raised to approximately 5” of elevation NAVD88 (4.4 inches as noted in technical material) to provide flooding relief, and extend the life of the road to 2040.

In the Sands Community (Big Pine), the recommendation is to raise the roadway elevation to approximately 11” of elevation NAVD88 (10.3 inches as noted in technical material) based on a similar assessment.

To develop these design recommendations, the following levels were used:

1. Value of the calculated 2015 MHHW value at each location.
2. The estimated water level where, on average, seven days of annual flooding is likely to occur in each location. Note that "on average" indicates there may be little to no flooding some years and more than seven days flooding in other years.
3. The addition of 5.4" of sea level rise from 2015 to 2040, based on the IPCC AR5 Median sea level rise identified in the Compact's Unified Sea Level Rise Projection for Southeast Florida (2015).

The full list of steps in the Methodology can be found at Appendix 2. Notable is the fact that each recommendation (5” for the Twin Lakes Community in Key Largo and 11” for the Sands Community in Big Pine) is very close to the range of the 4 scenarios evaluated in the project (first identified in Section 3.3 as 6”, 12”, 18” and 28”). When accounting for sea level rise and a point at which flooding does not exceed 7 days annually, the data resulting from evaluating the 6” and

12" scenarios in terms of cost, stormwater features and length of roadway to be elevated show a conceptual picture of what elevating to 5" and 11" will actually require. In summary:

	Scenario Considered	Elevation Length	Conceptual Cost
Recommendation for Twin Lakes Community in Key Largo of 5"	6"	.3 Miles	$0.92 Million
Recommendation for Sands Community in Big Pine of 11"	12"	.34 Miles	$2.63 Million

Note: Scenario Considered means the scenario evaluated in this analysis that is the closest to the recommendation when applying the Methodology in Appendix 2.

Additional Considerations for Design Guidance

These recommendations were developed to address typical and anticipated tidal flooding in the two pilot communities. In both communities, the intent was to identify an ultimate recommended roadway elevation that would address current conditions and long-term changing flooding patterns expected to worsen as sea level rises. A few important additional considerations include:

- The design does not need to be considered a one-time decision. The road could be constructed in the near term in such a way that the base material installed could support later additional material, while modifications would also be possible to also maintain the viability of the recommended stormwater system. This approach allows for flexible design implementation, should a higher sea level rise rate be realized within the project life time. This incremental process is supported by the Compact's *Unified Sea Level Rise Projection (2015).*
- Rising sea levels will result in a comparable rise in groundwater levels in Monroe County. This reality means that the base materials supporting the roadways constructed in the two pilot communities would likely be inundated regularly as tide cycles shift, or continuously if base material is installed below the mean sea level water level. The recommendation is that the County conduct additional research to determine how optional available base materials may help to reduce erosion in these areas and contribute to long-term roadway viability. This research will need to address construction materials, long-term maintenance costs and the benefits of additional roadway elevation as a method to maintain pavement quality long-term. The results of this research may alter the elevation recommendations identified above.

5 Part II: Legal and Policy Analysis

5.1 LEGAL ANALYSIS/BACKGROUND

As the impacts from sea level rise become more prevalent within Monroe County, a complete understanding of the County's responsibilities and duties with regard to specific infrastructure will become critical. It will become increasingly necessary to understand the County's obligations for each type of service provided, as well as the County's rights and obligations in reducing levels of service in response to sea level rise.

Local Government's Responsibility for Providing Services

Generally, local governments do not have a legal duty to provide particular services. Instead, the powers of a local government are defined by what they are permitted to do, rather than what they are compelled to do.[5]

With regard to services, Florida courts distinguish between "upgrading" and "maintenance" of infrastructure. The Florida Supreme Court has held that "the decision to upgrade" infrastructure is considered a "planning-level function, to which absolute immunity applies".[6] In contrast, this same Court has held that failing to "maintain" infrastructure is an "operational" activity that exposes the government to potential liability.[7] These decisions solidify the distinction that the government has immunity for planning decisions (which includes upgrading infrastructure) but not operational decisions (like maintenance), which require a duty to act with reasonable care to avoid harm to others.

However, the difference between maintenance and upgrading of infrastructure remains grey under Florida law in the context of a local government's duty to respond to changed circumstances affecting services – like increased flooding due to sea level rise.[8] Courts in other states have addressed this issue and concluded that there is no obligation to "upgrade" when the upgrade is a discretionary, planning-level decision rather than an operational function.[9]

---

[5] *See Ecological Dev., Inc. v. Walton Cnty.*, 558 So. 2d 1069, 1071 (Fla. 1st DCA 1990) ("A county is not obligated . . . to perform or provide for any particular construction or maintenance, except as it voluntarily assumes to do."); *Dep't of Transp. v. Neilson*, 419 So. 2d 1071, 1077 (Fla. 1982) ("The decision to build or change a road, and all determinations inherent in such a decision, are of the judgmental, planning-level type. To hold otherwise would . . . supplant the wisdom of the judicial branch for that of the governmental entities whose job it is to determine, fund, and supervise necessary road construction and improvements, thereby violating the separation of powers doctrine."); *Gargano v. Lee Cnty. Bd. of Cnty. Comm'rs*, 921 So. 2d 661, 667 (Fla. 2d DCA 2006) ("It is well established that decisions concerning the maintenance of and need to construct roadways, bridges, and other similar services are political questions outside the purview of the courts."); *Trianon Park Condo. Ass'n v. City of Hialeah*, 468 So. 2d 912, 920 (Fla. 1985) ("A governmental entity's decision not to build or modernize a particular improvement is a discretionary judgment function with which we have held that the courts cannot interfere.").

[6] *See Dep't of Transp. v. Konney*, 587 So. 2d 1292, 1296 (Fla. 1991) (holding that the decision of a government to upgrade an intersection was a planning level decision the government had immunity from).

[7] *See Neilson*, 419 So. 2d at 1073 (affirming the *Commercial Carrier* holding that "the failure to properly maintain existing traffic control devices and existing roads may also be the basis of suit against a government entity").

[8] Thomas Ruppert and Carly Grimm, *Drowning in Place: Local Government Costs and Liabilities for Flooding Due to Sea-Level Rise*, Fla. Bar Journal. Vol. 87, No. 9 (Nov. 2013), available at:
http://www.floridabar.org/divcom/jn/jnjournal01.nsf/8c9f13012b96736985256aa900624829/d1cd8a7e6519800885257c1200482c39!OpenDocument
(Florida case law has not directly ruled on the issue of whether changed circumstances that cause increased flooding despite a stormwater system still in its proper design condition results in liability for a failure to "maintain" or if changed circumstances leading to flooding indicates that a local government has discretion as to whether to "upgrade" the system).

[9] *Id.* (citing *Alden v. Smith Cnty.*, 679 N.E. 2d 36, 38 (Ohio Ct. App. 1996); *Colemn v. Portage Cnty. Eng'r*, 975 N.E. 2d 952, 960).

Local Government's Responsibility to Provide Drainage

In Florida, local governments have no general duty to provide drainage.[10] All local governments are permitted by statute to engage in the construction and management of drainage systems, but these are discretionary duties on the part of the local government.[11] However, once a local government does provide protection from flood damage through the construction of a storm sewer pump or similar system, it assumes the duty to do so with reasonable care.[12] Stated another way, when a local government provides this type of infrastructure, it "thereby assume[s] the duty to maintain and operate the system so that it [will] properly drain off *expected* excess water and prevent flooding."[13]

Local Government's Responsibility to Provide Drainage for Roads

Local governments do have a duty to reasonably maintain existing roads and traffic controls.[14] However, this duty applies only to a road "as it exists" and "does not contemplate maintenance as the term may sometimes be used to indicate obsolescence and the need to upgrade a road."[15] The duty to reasonably maintain roadways does not obligate the local government to upgrade a road through measures like road widening or changing the means of traffic control.[16] These measures have been deemed discretionary functions and cannot be compelled by the courts.[17]

Whether a local government has a duty to upgrade existing drainage systems to effectively drain greater volumes of stormwater or address flooding from sea level rise or extreme rain events will depend upon whether courts classify this action as a discretionary, planning-level or a nondiscretionary, operational- and maintenance-level function.[18] Since the failure of drainage systems to function as effectively due to sea level rise represents a changed situation that would require a redesign of the system to provide the same level of service previously provided, it would seem more logical to classify this as an "upgrade" rather than "maintenance."[19] If that is the case, a local government's decision not to upgrade such a system would be covered by sovereign immunity, insulating the local government from flooding damage claims by those impacted if a drainage system is not upgraded.[20]

---

[10] *Supra*, note 8.
[11] *Id.; See, e.g.*, Fla. Stat. § 170.01(1)(a) & (b) (2016) ("Any municipality of this state may, by its governing authority…provide for the…guttering, and draining of streets, boulevards, and alleys…[o]rder the construction, reconstruction, repair, renovation, excavation, grading, stabilization, and upgrading of greenbelts, swales, culverts, sanitary sewers, storm sewers, outfalls, canals, primary, secondary, and tertiary drains, water bodies, marshlands, and natural areas, all or part of a comprehensive stormwater management system, including the necessary appurtenances and structures thereto and including, but not limited to, dams, weirs, and pumps."); Fla. Stat. § 403.0893 (2016) (granting local governments authority for certain mechanisms to fund stormwater management).
[12] *Id.* (citing *Slemp v. City of N. Miami*, 545 So. 2d 256, 258 (Fla. 1989)).
[13] *Id.; See also Sw. Fla. Water Mgmt. Dist. v. Nanz*, 642 So. 2d 1084, 1086 (Fla. 1994) ("Having assumed control of this drainage system and undertaken to operate and maintain said drainage system, [d]efendants, and each of them, had a duty and obligation to prudently operate, control, maintain, and manage said system so that it would work properly and drain off excess waters so as not to cause flooding in the area. Defendants owed said duties and obligations to your [p]laintiffs, residents and/or owners of homes and real property serviced by the drainage system."); *Trianon Park Condo. Ass'n, Inc.*, 468 So. 2d 912; *Collazos v. City of W. Miami*, 683 So. 2d 1161 (Fla. 3d DCA 1996).
[14] *Id.* (citing *Neilson*, 419 So. 2d at 1078).
[15] *Id.*
[16] *Id.* (citing *Konney*, 587 So. 2d at 1294).
[17] *Id.*
[18] *Id.*
[19] *Id.*
[20] *Id.*

Services Reduced or Compromised

There may also be instances where the County needs to reduce transportation infrastructure services in response to flooding or sea level rise. Florida law provides specific procedures and requirements for counties to use in closing or abandoning roads.[21] Additionally, the recent *Jordan v. St. Johns County*[22] decision involved the effects of erosion on St. Johns County's ability to maintain a county road. In this case, St. Johns County did not to maintain Old A1A because of the frequency of washout and the economic burden on the County for a limited number of residents using the road. The opinion specifically noted that the County's procedural failure to formally abandon the road in accordance with the statute helped support the residents' liability claims. Should Monroe County decide to stop maintaining perpetually flooded roadways in the future, a key component is that the statutory abandonment process should be utilized.

Sea Level Rise Policy in Comprehensive Plans

In 2015, Florida passed a law entitled "An Act Relating to the Peril of Flood."[23] These new provisions now require that coastal management elements of Comprehensive Plans include a "redevelopment component that outlines the principles that must be used to eliminate inappropriate and unsafe development in the coastal areas when opportunities arise."[24] While the redevelopment concept in the coastal management element itself is not new, what is required to be addressed in the element has been enhanced. The new full requirements include:

- Development and redevelopment principles, strategies, and engineering solutions that reduce the flood risk in coastal areas which results from high-tide events, storm surge, flash floods, stormwater runoff, and the related impacts of sea level rise.
- Encouraging the use of best practices development and redevelopment principles, strategies, and engineering solutions that will result in the removal of coastal real property from flood zone designations established by FEMA.
- Identifying site development techniques and best practices that may reduce losses due to flooding and claims made under flood insurance policies issued in this state.
- Being consistent with, or more stringent than, the flood-resistant construction requirements in the Florida Building Code and applicable flood plain management regulations set forth in 44 C.F.R. part 60.
- Requiring that any construction activities seaward of the coastal construction control lines established pursuant to Section 161.053, F.S. be consistent with Chapter 161, F.S.
- Encouraging local governments to participate in the National Flood Insurance Program Community Rating System administered by FEMA to achieve flood insurance premium discounts for their residents.[25]

---

[21] *See* Fla. Stat. §§ 316.006, 336.09, 336.10, 336.12, 336.125 (2016).
[22] *Jordan v. St. Johns Cnty*., 63 So. 3d 835 (Fla. 5th DCA 2011).
[23] Laws of Florida, 2015-69.
[24] Laws of Florida, 2015-69, § 1, codified at Fla. Stat. § 163.3178(2)(f) (2016).
[25] Erin L. Deady, Esq., AICP, LEED AP and Thomas Ruppert, Esq., *The Link Between Future Flood Risk and Comprehensive Planning*, 2 ELULS Reporter 7-8 (Sept. 2015); available at: eluls.org/wp-content/uploads/2015/06/September-2015-Edition-Final.pdf.

Local governments appear to have broad discretion as to how they comply with this new mandate. And corollary to that, the law does not specify a date by which local governments must comply. That said, Section 163.3191(1), F.S. still requires local governments to evaluate their plans at least once every seven years to determine if amendments are necessary to reflect relevant changes in state law and a local government also has the authority pursuant to Section 163.3191(2), F.S. to make a determination that amendments are necessary sooner than that 7-year requirement.[26] With that, Monroe County will have some level of discretion in terms of compliance with these new requirements, but the concepts contained within this Report related to infrastructure planning and design for roads are conceivably a compliance strategy. Additionally, all the work the County is doing related to achieving a favorable score in the Community Rating System will also lend itself to compliance with these new requirements.

Local Government's Liability with Regard to Service Delivery

The two most prominent liabilities facing the County with regard to service delivery are those of sovereign immunity and potential takings claims.

a. *Sovereign Immunity*

Florida waived sovereign immunity in tort actions in 1973 with its Torts Claims Act,[27] opening the door for private citizens to sue local governments over flooding damage.[28] However, tort claims involving government infrastructure may still be subject to sovereign immunity despite the statutory waiver.[29] The Florida Supreme Court has held that despite the Act, certain "discretionary" government functions remain immune from tort liability because these "planning" level functions may not be subject to scrutiny by judge or jury as to the wisdom of their performance.[30] These planning level decisions are contrasted from those operational functions as discussed above.

b. *Takings Claims*

There is also potential liability for local governments related to service delivery through private takings claims. There are two types of takings: 1) per se and 2) as applied takings. Per se takings amount to a taking of all viable economic use of the property.[31] As applied takings claims require a case-by-case factual analysis of the degree of interference with property use.[32]

To support a claim for inverse condemnation, flooding must be caused by government action that results in "an actual, permanent invasion of the land, amounting to an appropriation of and not merely an injury, to the property."[33] The "permanent" invasion element of a taking is satisfied, according to Florida courts, where periodic flooding occurs or is expected to recur, that

[26] *Id.*
[27] Fla. Stat. §768.28 (2016).
[28] *Supra*, note 8.
[29] *Id.*
[30] *Id.* (citing *Commercial Carrier Corp. v. Indian River Cnty.*, 371 So. 2d 1010, 1022 (Fla. 1979) and *Konney*, 587 So. 2d at 1294).
[31] *Lucas v. S. Carolina Coastal Council*, 505 U.S. 1003 (1992).
[32] *Lost Tree Village v. City of Vero Beach*, 838 So. 2d 561, 570 (Fla. 4th DCA 2002).
[33] *Supra*, note 8 (citing *S. Fla. Water Mgmt. Dist. v. Basore of Fla., Inc.*, 723 So. 2d 287, 288 (Fla. 4th DCA 1998)).

deprives the property owner of all reasonable use of their land.[34] Recently, the U.S. Supreme Court held that periodic flooding, even if only temporary, may result in a compensable takings claim for damage to property if it's also caused by governmental action *[emphasis on the causation by governmental action]*.[35] This suggests that government action causing even periodic flooding on a temporary basis may be a taking, depending on the specific facts at issue. But note the distinction is based on the actual governmental action causing the flooding for instance where the government constructs a building that causes flooding to an adjacent property owner. The inaction of government has not historically been sufficient to support a claim for inverse condemnation, but this is an important concept to consider.[36]

The *Jordan* case calls that general principle of inaction into question unfortunately.[37] Landowners sued St. Johns County alleging that the County failed to reasonably maintain a County-owned road known as "Old A1A" to such an extent that the County deprived the landowners of access to their land, resulting in a taking of property. As briefly noted above, there was a dispute among several private property owners challenging St. Johns County over their legal responsibility to maintain Old A1A, a coastal road inundated by storms and hurricanes. In 1979, the State deeded Old A1A to the County. By 2005, the County enacted a temporary residential building moratorium for properties along the roadway segment at issue (approximately 60 in total).

In response to the County's actions, a complaint was filed in 2005 against St. Johns County[38] claiming generally that the County had deprived these landowners of access to their land. A total of five claims were raised against the County, including: 1) that the County had a duty to provide emergency services; 2) that the County had a duty to restore and perpetually maintain Old A1A to ensure the property owners' access; 3) an injunction was needed requiring the County to perpetually maintain Old A1A to ensure access; 4) inverse condemnation due to the deteriorated road/lack of access; and 5) inverse condemnation due to the temporary building moratorium.

As a low-lying coastal road, Old A1A is subjected to continuous damage from natural forces, including storms and erosion and although not mentioned, even sea level rise.[39] The County argued that the only feasible way to protect the road from the "ravages of the ocean" was to expend more than $13 million to elevate the height of the road by placing large amounts of sand along its entire length from the right-of-way down to the mean high-water mark.[40] The County further argued that it would have to spend an additional $5-8 million every 3-5 years to maintain that protection. According to the County, it could not spend these sums because they

[34] *Id.* (citing *Elliott v. Hernando Cnty.*, 281 So. 2d 395, 396 (Fla. 2d DCA 1973) (holding that plaintiff's property rights had been sufficiently infringed to demonstrate a taking under the Florida Constitution when the government diverted the natural flow of rain waters to appellants' real property and subsequently rendered the property unusable and unsanitary. Such flooding was considered "permanent" in that rain is a condition that is reasonably expected to continually reoccur in the future)).
[35] *Id.* (citing *Ark. Game & Fish Comm'n v. United States*, 133 S. Ct. 511 (2012)).
[36] *Id.* (citing *Griffin Broadband Commc'ns, Inc. v. United States*, 79 Fed. Cl. 320, 324 (2007) ("A necessary component of any takings claim is that the [g]overnment actually took property, whether by physical invasion or regulatory action….")). *See also* Robert Meltz, *Substantive Takings Law: A Primer*, a paper presented at the 12th Annual CLE Conference on Litigating Regulatory Takings and Other Legal Challenges to Land Use and Environmental Regulations at 14-15 (Nov. 2009), *available at* http://www.vjel.org/docs/Takings%20Conference/Meltz_Vermont_conf%20--%20takings_primer.pdf.
[37] *Jordan*, 63 So. 3d at 839.
[38] *Id.*
[39] *Supra*, note 8.
[40] *Id.*

represented more than the entire County budget for repair and maintenance of the County's 800 miles of roads.

At the lower level, the trial court entered final summary judgment in the County's favor on all counts.[41] On appeal though, the Fifth District Court of Appeal opined that the County had a duty to "reasonably maintain" and repair Old A1A in such a way as to result in "meaningful access."[42] The case was remanded to determine whether the County had fulfilled its duty. More significantly, however, the court held that governmental inaction — in the face of an affirmative duty to act — can support a claim for inverse condemnation."[43] For the first time in Florida, this case established a precedent that government inaction may be grounds for a plaintiff to bring a constitutional takings claim if the government had a duty to act.[44] In December 2011, the Florida Supreme Court declined review in this case.

The case ultimately settled whereby the County and property owners came to agreement on levels of service for the road in the future, recognizing the environmental challenges impacting the quality of the road in the future. As part of the settlement, the following were agreed to:

- County agreed to use "good faith" efforts to maintain Old A1A in "As Is" condition;
- County agreed to use "timely and good faith efforts" to keep access open;
- County agreed to include the existing paved portion of Old A1A in the pavement management schedule and repave it as needed;
- County agreed to resurface a 0.3-mile portion of Old A1A to create a connection with New A1A;
- The County agreed to remove diminished road access as an impediment to obtaining building permits;
- Property owners agreed to give the County notice and an opportunity to buy properties along this roadway before selling to others;
- The County agreed to repeal the requirement that prospective home builders sign "hold harmless" agreements to get building permits;
- Property owners agreed to grant easements to restore access to parcels outside of the existing paved area;
- Agreed to allow transit over County-owned parcels to facilitate access to parcels outside of the existing paved area;
- Agreed to consider recommendations of the Summer Haven Municipal Services Taxing Unit ("MSTU") regarding the use of MSTU funds; and
- County agreed to pay $75,000 to partially reimburse Plaintiff-Owners' costs.[45]

[41] *Jordan*, 63 So. 3d at 837.
[42] *Id.* at 839.
[43] *Id.*
[44] *Supra*, note 8.
[45] Exhibit A: Settlement Agreement and Release, Case. No. 05-CA-0694.

5.2 CASE STUDIES

As sea level rises and flooding increases in Florida, local governments are beginning to make policy decisions in response. Two case studies, St. Johns County and Miami Beach, are particularly useful in illustrating how Florida governments are responding through the use of pilot projects to develop preliminary design criteria. Additionally, the SFWMD is also starting to address these issues.

St. Johns County- Natural Forces Ordinance

As a result of the *Jordan* case discussed above, St. Johns County adopted an ordinance[46] in 2012 to specifically address "natural forces degradation" and damage to public roads and streets and other improved public rights-of-way used for travel and recreation. In essence, the ordinance creates a "Design Exception" to allow the County to deviate from the minimum standards mandated by the Florida Department of Transportation's Greenbook. The ordinance establishes design criteria and standards for existing roads in areas designated as "environmentally-challenging locations" and defines meaningful access for the users of such roads. Environmentally-challenging locations are defined, among other things, as "locations where typical road design criteria and standards are infeasible due to the economic implications of naturally occurring conditions."[47] Meaningful access is defined as "the ability to use some type of commercially available land vehicle on a road or portion of a road owned and maintained by the County for access to private property. For property along formerly opened State or County roads, or portions thereof, meaningful access shall include access to such property by way of necessity by law or in fact."[48]

The following design criteria were adopted by St. Johns County in this ordinance:

- Design criteria listed serve as an approved Design Exception to the uniform minimum standards for the design, construction, maintenance and operation of public roads pursuant to Section B, Chapter 14 of the Florida Greenbook;
- Due to forces of nature and environmental conditions, access to property by roads in environmentally-challenging locations may be limited. The Commission may then designate such road as being located in an environmentally-challenging location;
- For those designated as located in environmentally-challenging locations, the minimum standards of maintenance shall differ from the County's general maintenance standards;
- Roads in environmentally-challenging locations may experience conditions that necessitate that the County's design criteria be altered to the point that the following may be present in providing meaningful access:
    - Unpaved surfaces and sub-surfaces composed of muck, sand, clay or organic material.
    - Sub-standard lane widths, single lanes and varying maintained widths.

[46] *See* St. Johns County, Fla., Ordinance 2012-35 (effective Dec. 11, 2012).
[47] *Id.*
[48] *Id.*

  - Vehicle type, size, and weight limitations.
  - Periods of time when the roads may be submerged, buried by soil, covered by sand or blocked by vegetative debris.
  - No assurance that emergency vehicles can use or routinely use the road for access.
  - Paved surfaces with intermittent pavement, potholes, cracks, loose material.
  - Other conditions that cause the roads to be in substandard condition.
- Property owners with existing improvements that are accessed by roads that are located in environmentally-challenging locations may encounter access issues.
- Access to private property served by existing County-owned or maintained roads in these locations may be limited by naturally occurring conditions beyond the reasonable control of the County. Resulting circumstances may include:
  - Roadway conditions require the use of a four-wheel drive vehicle for passage.
  - Periods of time before roadway repair will be accomplished when vehicular access is not possible or is more limited than usual.
  - Extended periods when access and the roadway are impassable to vehicles.
  - Instances when roadway repair cannot be accomplished without permits issued by state or federal agencies for necessary impacts to a protected resource.
- Any owner in a designated area who rents property for more than fourteen days in a single calendar year is deemed to have meaningful access regardless of roadway condition.
- Except by the Commission, the County has no affirmative duty to construct or permit construction of new or extended roads in these designated areas.
- County has no obligation to improve any portion of a County-owned and maintained road in a designated area adjacent to private property who purchases property after the ordinance existed or after the County designated the location.
- Nothing in the ordinance prohibits private property owners from petitioning the Commissioners for a vacation of the road or for the establishment of a Municipal Services Benefit Unit or Municipal Services Taxing Unit.[49]

City of Miami Beach- Land Development Regulations

The City of Miami Beach has experienced significant tidal flooding in recent years. The City is currently moving toward the development of design criteria to incorporate into its land development regulations of citywide road design, but has not yet done so.[50] Although it is not yet incorporating sea level rise considerations into its building code, the City has explicitly

[49] *Id.*
[50] Conversation with Bruce Mowry, City Engineer, City of Miami Beach on or around November 18, 2016.

accounted for "sea level change" in its Stormwater Management Master Plan ("SWMMP").[51] The City's new SWMMP accounts for sea level rise, makes recommendations for 20-year capital improvements, provides flexibility for various rates of sea level rise, and provides drainage analyses using technical modeling. In its 20-year capital improvement program, the SWMMP accounts for sea level change over a 20-year planning horizon for stormwater infrastructure and 50-year horizon for seawall heights.[52]

In addition to sea level rise generally, the City is also responding to impacts from exceptionally high tides, or "King tides."[53] These King tides cause the City's gravity flow stormwater drainage infrastructure to become ineffective, which results in road flooding.[54] The City has addressed the problem in the short-term by installing check valves, which only allow outflow, at points where stormwater pipes discharge into Biscayne Bay, and pumps to give the stormwater sufficient pressure to overcome the increased inflow pressure associated with the high tides.[55] For the longer term solution, the City has also raised the stormwater infrastructure design sea level considerations by two feet in the new SWMMP, to both account for the King tides and begin to address future sea level rise.[56]

The City is also implementing requirements on buildings to prepare for rising water. Because sea level rise will eventually require the City to raise its streets and sidewalks, and because all structures within the City are within a floodplain, the City is currently requiring new buildings to include false fronts.[57] This allows the building's ground floor to be above street level, yet still accessible to persons with disabilities, and already capable of accommodating a higher street level.[58]

Much of the City's work in addressing sea level rise through road design (or elevated re-design) has been the result of two pilot projects: 1) Sunset Harbour Neighborhood Improvement Project[59] and 2) West Avenue Neighborhood Improvement Project.[60] Sunset Harbour is an improvement project that includes both infrastructure improvements and above-ground improvements. Water mains and service, water meters, fire hydrants, sanitary sewer lines and manholes, and the existing stormwater drainage system are all included in the preliminary infrastructure improvements. Raising and reconstructing roadways and leveling private property driveways are the sea level rise related above-ground improvements to be implemented through this project. The West Avenue pilot project includes the installation of a new stormwater drainage system with pump stations and raising the elevation of the roadway to minimize street flooding, along

[51] Lenhers, M. et al., *Planning for Sea-Level Rise: A Guide for Managers, Owners and Regulators of Water-Dependent Infrastructure*, available at: *https://www.law.ufl.edu/_pdf/academics/centers-clinics/clinics/conservation/resources/final-deliverable-2b2-guidance-document-on-slr-and-water-dependent-infrastructure.pdf* (last accessed Nov. 28, 2016).
[52] *Id.*
[53] *Id.*
[54] *Id.*
[55] *Id.*
[56] *Id.*
[57] *Id.*
[58] *Id.*
[59] *See* Sunset Harbour Neighborhood Improvements website, available at: *http://www.mbplannedprogress.com/projects/neighborhood-improvements/middle-beach/sunset-harbour-neighborhood-improvements*.
[60] *See* West Avenue Neighborhood Improvement Project website, available at: *http://www.mbplannedprogress.com/projects/neighborhood-improvements/south-beach/west-avenue-neighborhood-improvement-project*.

with matching the new roadway elevation to existing driveways. These improvements were projected to be completed by Fall 2016.

Through these two pilot projects, the City has implemented – through resolution[61] and its SWMMP – two specific design criteria addressing sea level rise. First, the City has adopted a 3.7' NAVD crown of the road height. Second, the City has required that no inlet on a street shall be less than 2.7' NAVD (based on drainage). The City also recently passed Ordinance 2016-4010 defining crown of the road, future crown of the road, and establishing minimum and maximum yard elevation requirements.[62]

In addition, the City has also changed its regulations related to base flood elevation for residential property, with regulations for commercial properties likely forthcoming. According to Bruce Mowry, the City's Engineer, the City may also be mandating adaptive architecture in the future to more easily accommodate building modification in response to sea level rise. Though the City of Miami Beach has not yet adopted a comprehensive set of citywide criteria (for road design or sea level rise generally), they continue to make policy and regulatory decisions in direct response to sea level rise.

South Florida Water Management District Flood Control Structures

The SFWMD has developed a Flood Protection Level of Service ("LOS") program designed to identify and prioritize long-term infrastructure needs. Level of Service projects provide a process to establish flood protection thresholds for each basin within the SFWMD and while specific to flood control structures, the idea of establishing such levels of service is pertinent. The flood protection thresholds established are then used to initiate retrofits or other adaptation efforts in the capital planning process. Of note, the thresholds are basin specific based on site-specific assessments, and are not uniform everywhere. Adaptation efforts are coordinated with the District's annual structure maintenance program.

As part of this program, the District uses its Conceptual Adaptive Resilience Model to establish the sea level at which existing infrastructure no longer provides flood protection. Based on the amount of time required to rebuild, conditions are established to trigger replacement of particular infrastructure. The SFWMD then monitors conditions and initiates an adaptive strategy once a given condition is realized.

The SFWMD is currently implementing the Flood Protection Level of Service program through several projects, including:

- C-4 Basin LOS project – to determine the existing and future (using three sea level rise scenarios) flood protection level of service for this basin to prioritize flood protection issues and initiate basin-specific solutions. The project was slated to be completed by the end of FY 2015-16;
- C-7, C-8 and C-9 Basins LOS projects – to determine the existing and future (using three sea level rise scenarios) flood protection level of service for these basins to develop flood

[61] *See* City of Miami Beach, Fla., Resolution 2016-29366 (Apr. 13, 2016) and City of Miami Beach, Fla. Resolution 2014-28499 (Feb. 12, 2014).
[62] *See* City of Miami Beach, Fla., Ordinance 2016-4010 (effective Jun. 8, 2016).

protection strategies with Miami-Dade County and incorporate into the Local Mitigation Strategy. The project is slated to be completed during the FY 2016-17 cycle; and

- Big Cypress Basin LOS project - to determine the existing and future (using three sea level rise scenarios) flood protection level of service for this basin, including an assessment of future land use. The project is slated to be completed during the FY 2016-17 cycle.

5.3 RECOMMENDATION ON POLICY

The County currently addresses road design criteria in two key Code sections,[63] as well as capacity-based levels of service.[64] For the purposes of this discussion, the design criteria (as opposed to capacity) are most relevant.

Currently, the County's road design requirements in Section 19-42 (Construction standards and specifications) of the Code of Ordinances are that:

- "All construction, repairs and/or restorations within county public rights-of-way and easements shall conform to the technical standards and specifications as contained in the Florida Greenbook and the 1995 edition of the "Monroe County Public Works Manual," which manual is hereby adopted pursuant hereto and, by reference, incorporated herein.
- Revisions to the 1995 "Monroe County Public Works Manual" may be adopted by the board of county commissioners by resolution."[65]

Section 114-7 (Streets) of the County's Land Development Code includes the following design criteria:

- The arrangement, character, extent, width, grade and location of all streets shall conform to all the county plans and shall be considered in relation to existing and planned streets, topographical conditions, public convenience and safety, and in their appropriate relation to the proposed uses of the land to be served by such streets.
- Right-of-way shall be provided and dedicated to the public in accordance with the following:
  - State *roads*: as determined by the Florida Department of Transportation;
  - Secondary *roads* and streets: 50 feet, with 25 feet on either side of centerline.
- Roads and streets shall be located to provide access to all adjoining land at intervals of not more than one-quarter mile (1,320 feet) unless blocked by a natural obstacle. Access to all adjoining property must be provided by the developer at his expense if any of the developer's actions block natural or existing access.
- Names of subdivisions, *roads* and streets previously used for subdivisions in the county shall not be given to new subdivisions unless their post office addresses are different towns or cities. *Roads* and streets that form extensions, or are located along the general

[63] Monroe County, Fla., Code of Ordinances ch. 19, art. II, § 19-42 (2015) and Monroe County, Fla., Land Development Code ch. 114, art. I, § 114-7 (1987).
[64] Monroe County, Fla., Land Development Code ch. 114, art. I, § 114-2 (1992).
[65] Monroe County, Fla., Code of Ordinances ch. 19, art. II, § 19-42 (2015).

projections of existing *roads* and streets, shall be named after the existing *roads* and streets.

- Street markers and traffic-control signs shall be installed at the expense of the developer in accordance with the county's typical standard construction details.
- The arrangement of streets in a subdivision shall either:
  - Provide for the continuance or appropriate projection of existing principal streets in surrounding areas; or
  - Conform to a plan for the neighborhood to meet a particular situation where topographical or other conditions make continuance or conformance to existing streets impracticable.
- Minor streets shall be laid out to discourage their use by through traffic.
- Where a subdivision abuts or contains existing or proposed arterial streets, the county engineer may require marginal-access streets, reverse frontage with screen planting contained in a nonaccess reservation along the rear property line, deep lots with rear service alleys, or such other treatment as may be necessary for adequate protection of residential properties and to afford separation of through and local traffic.
- Reserve strips controlling access to streets shall be prohibited except where their control is placed under the county, with conditions approved by the county engineer.
- Streets with centerline offsets of less than 125 feet at points of intersection with other streets shall be avoided where possible.
- A tangent of at least 100 feet shall be introduced between reverse curves on arterial and collector streets if required by the county engineering department.
- When connecting street lines deflect from each other at any one point by more than ten degrees, they shall be connected by a curve with a radius adequate to ensure a sight distance of not less than 300 feet for minor and collector streets, and of such greater radii as the department of planning shall determine for special cases.
- Streets shall be laid out so as to intersect as nearly as possible at right angles, and no street shall intersect any other street at less than 80 degrees.
- Property lines at street intersections shall be rounded with a minimum radius of 25 feet, or a greater radius where the county engineer may deem it necessary. The county engineer may permit comparable cutoffs or chords in place of rounded corners.
- Half-streets shall be prohibited, except where essential to the reasonable development of the subdivision in conformity with the other requirements of this article, and where the county engineer finds it will be practicable to require the dedication of the other half when the adjoining property is subdivided. Wherever a half-street is adjacent to a tract to be subdivided, the other half of the street shall be platted within such tract.

- Dead-end streets, designed to be so permanently, shall be provided at the closed end with a turnaround having an outside roadway diameter of at least 70 feet, and a street property line diameter of at least 100 feet, or may be provided with a "T" type turnaround as may be approved per "Standard Specifications and Details of Monroe County" by the department of planning.
- Street grades, including bridge approaches, shall not exceed six percent and shall include properly designed vertical curves.
- Paved roads and streets shall be paved at least 20 feet wide on a minimum base width of 22 feet and a minimum subgrade width of 24 feet, all as required in the county's typical standard construction details.
- Stabilized shoulders seven feet wide shall be provided for public parking and safety alongside roads and streets.
- The minimum crown elevation of all roads and streets in the county shall be plus 4.0 msl.[66]

Recently, the County has begun factoring sea level rise considerations into decisions related to road improvement projects. The factors already being considered on a project-by-project basis are the local MHHW level, adding the 2015 fall King Tide data (for example, at the Vaca Key NOAA Tide Gauge, County staff used 90% of maximum level and for Key West, the only gauge for ocean side roads, County staff used 100% of the maximum level). Additionally, 5.4 inches was added to the flooding estimate or the maximum predicted sea level rise from 2015 to 2030. A target elevation for the edge of pavement was derived and increased by 2% for the road crown and this target elevation was evaluated against other localized impacts such as adjacent properties.

While these considerations are already being factored into road project design by County staff, a more comprehensive policy that takes into account the full array of site-specific conditions and can be applied countywide is warranted. From a policy perspective, while the Board of County Commissioners may decide upon a particular level of projected sea level rise to drive design decisions, other considerations and constraints may prevent that goal from being achieved.

This Pilot Project provides a mechanism to tie these numerous concepts together and develop recommendations for a countywide approach to addressing future flooding into road design criteria. Comprehensive Plan requirements are moving in that direction, but from the County's perspective, tying the useful life of infrastructure projects to sea level rise factors is something already established as a policy. Monroe County Comprehensive Plan Policy 1502.1.5 states that:

> Within five (5) years after the adoption of the 2030 Comprehensive Plan, Monroe County shall initiate an inventory of existing and planned infrastructure up to the 2030 horizon, based upon the vulnerability mapping identified in Policy 1502.1.4 for capacity to accommodate projected sea-level rise of the life expectancy of that infrastructure. Monroe County shall identify the infrastructure within those areas, its useful life and any retrofits or capital projects necessary to address the impacts of sea level rise. These strategies may include defense, accommodation, or and retreat projects, or not building planned infrastructure in vulnerable locations, to

[66] Monroe County, Fla., Land Development Code ch. 114, art. I, § 114-7 (1987).

address the impacts of sea level rise. Monroe County will consider developing design criteria, in conjunction with a broader asset management process.[67]

Based on the case studies discussed in this Report, the Team has developed a policy approach, and draft Ordinance attached as Appendix 2, that incorporates three key elements of design related to roads in the face of changing environmental conditions. The Elements include:

- Design Criteria Development;
- Local Conditions Analysis; and
- Special Designation for Environmentally-Challenging Locations and Providing Meaningful Access.

We discuss the framework for each of these Elements below.

1. **Design Criteria Development**

   The road design requirements currently set forth in Sections 19-42 and 114-7 of the County's Code are not sufficient to address the impacts of sea level rise on roadways, as required by Monroe County Comprehensive Plan Policy 1502.1.5. These existing criteria are not tied to the Compact or other sea level rise projections, nor do they consider sea level rise impacts over the useful life of future road improvement projects.

   It is recommended that Monroe County use an approach similar to that used in St. Johns County in its 2012 Ordinance regarding treatment of the Greenbook recognizing that it shall be applied to the extent that economic and environmental considerations in existing development will allow. That approach was that design criteria were adopted by ordinance and compliance with such County regulation is an approved Design Exception to the Greenbook. The Design Exception for Monroe County could incorporate consideration of the low or IPCC AR5 Median sea level rise projection, at a minimum, for the useful life of that particular road improvement project. The Design Exception could also include a threshold in terms of days where flooding is not exceeded. To understand the steps in the process used to develop various design recommendations see Section 4.5 and Appendix 1 – Methodology for Development of Flood Level Estimates for the Two Communities of this Report.

2. **Local Conditions Analysis**

   Designing to a particular sea level rise target may not be achievable because of local conditions that vary location to location and this should be considered in developing design criteria. These conditions have been discussed previously in Section 3.3.

   In evaluating these local conditions, County staff will have to balance these challenges and conditions to create targets best suited for a particular roadway.[68]

[67] Monroe County, Fla., *Monroe County Year 2030 Comprehensive Plan* (as adopted Apr. 13, 2016), available at: *http://www.monroecounty-fl.gov/Documentview.aspx?DID=4606*.

[68] This concept borrows from Fla. Stat. § 373.414 (2016) utilizing a similar "balancing test" to determine whether an activity over surface water or wetlands is contrary to or in the public interest by evaluating seven express criteria.

3. **Special Designation for Environmentally-Challenging Locations and Providing Meaningful Access**

   The final element of the policy approach is to 1) provide for a special designation of "environmentally-challenging locations" and 2) provide for meaningful access to address the appeal of the *Jordan* case in the Fifth District Court of Appeal. As discussed earlier in this Report, that court opined that the County had a duty to "reasonably maintain" and repair Old A1A in such a way as to result in "meaningful access." Any policy approach should incorporate this Element to avoid the issues raised in that case regarding access along the roadway. By defining a process to create a special designation for environmentally-challenging locations and providing meaningful access in light of the natural forces degradation of roadway infrastructure, the County is formally acknowledging that meeting specific design criteria goals may not always be achievable. Once designated, based on the local conditions analysis reduced levels of service may be the result due to environmental, economic or property-based conditions in these areas.

Figure 13 - Sample Process Evaluation

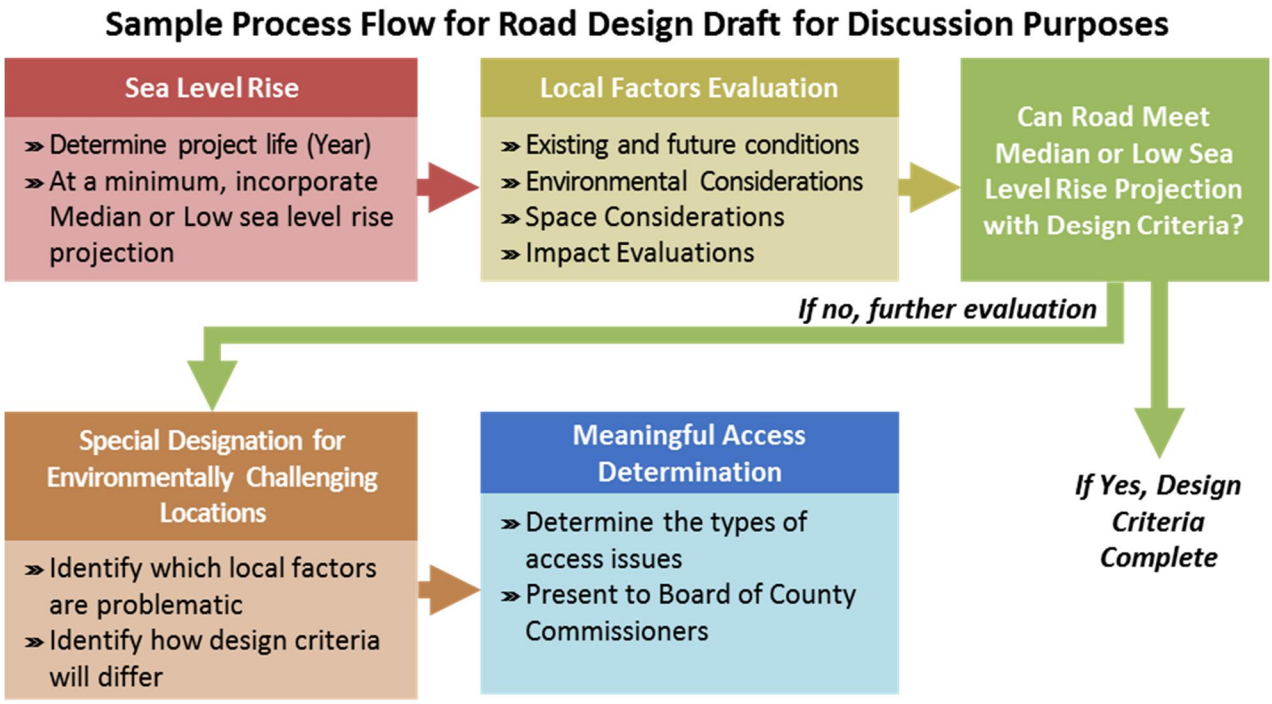

5.4 CONCLUSIONS

Based on the foregoing, several key conclusions can be reached from this analysis that support the adoption of a policy approach such as that outlined here in the form of an Ordinance. A draft ordinance is included as Appendix 2 – Draft Ordinance to this Report, but the following conclusions are relevant:

- The law is moving in the direction of requiring local governments to harmonize future flood risk and the useful life of infrastructure projects. The County has already adopted a local policy requiring this linkage.
- While there is no legal duty to provide a specific level of service for flood risk on roads, reasonable maintenance resulting in meaningful access has been one court's interpretation of those duties with regard to local government action.
- Developing a countywide approach for addressing these issues is preferable to case-by-case determinations because it provides more long-term certainty for the County in capital planning and residents in terms of expectations for levels of service.
- The lessons learned from this Pilot Project have served an important purpose related to understanding the case-by-case differences in attempting to develop road design criteria that address future flood risk. That said, any discussion related to road design criteria countywide will be aided by a) better elevation data and b) a more specific vulnerability analysis to determine the timing and magnitude of future risk related to sea level rise.
- While there is no single local government case study that has addressed all of issues in one policy approach, case studies have addressed: a) road design criteria that incorporate sea level rise, b) developing policy in the face of environmentally challenging road conditions and c) case-by-case localized (or basin) criteria recognizing that levels of service fluctuate but can still address common conditions. All of these elements combined form the basis of the Draft Ordinance in Appendix 2.

6 Appendix

6.1 APPENDIX 1 – METHODOLOGY FOR DEVELOPMENT OF FLOOD LEVEL ESTIMATES FOR THE TWO COMMUNITIES

The Team conducted a series of technical processes to understand flooding recurrence in the two pilot communities (Twin Lakes and Sands Community). The overall intent of this effort was to identify a water elevation that represents a value for an annual return period (not to exceed 7 days) and also includes sea level rise in determining a desired final roadway elevation for implementation.

1. First, the Team obtained the water elevation data and tidal datums from the Vaca Key Tide Gauge for the 20-year period from 1995 to 2015[1]. Data from this gauge was analyzed to determine certain values, including:
    a. Tidal datum information, including a calculated value for MHHW, which is the daily highest tide.
    b. Water elevation levels, which represent calculated annual return period values estimated from the twenty-year record. This included the identification of a flooding level value that represents an estimated seven days annually of flooding.
    c. The calculated difference between the values noted above – MHHW and a water elevation representing flood levels which would occur 7 days out of the year –was identified as 6" of difference.
2. Second, tidal datum values for MHHW were then obtained for the two pilot communities through the application of the NOAA VDATUM tool, which provides tidal datum elevations for areas not immediately adjacent to a tide gauge. These values were obtained for 2015, adjusted as outlined in the note above, by 3 inches.
3. Third, the targeted elevation values were identified for each pilot community through a combination of the values noted above. These included:
    a. Value of the calculated 2015 MHHW value at each location.
    b. The addition of 6" (from 1c above) to get to an estimated water level where, on average, seven days of annual flooding is likely to occur in each location. Note that "on average" indicates there may be little to no flooding some years and more than seven days flooding in other years.

[1] *The twenty-year tidal record includes approximately 3 inches of sea level rise estimated for the 1995-2015 period. To capture only the tidal influence in this assessment, the twenty-year tidal record was adjusted using the NOAA sea level trend from the Vaca Key Tide Gauge (0.13 inches/year) to develop a constant baseline of elevations. The calculated values were then adjusted to find true 2015 levels using sea level rise from 1992 to 2015 (3.0 inches) based on the IPCC AR5 Median sea level rise projection as identified in the Compact's Unified Sea Level Rise Projection for Southeast Florida (2015). The differences in calculated value for MHHW and seven days of flooding were determined for the Vaca Key Tide Gauge, which are then adjusted again for specific tidal conditions in the pilot communities. This means that the 6" value noted above remains constant for all locations where the data from this tide gauge would be applied.*

c. The addition of 5.4" of sea level rise from 2015 to 2040, based on the IPCC AR5 Median sea level rise identified in the Compact's *Unified Sea Level Rise Projection for Southeast Florida (2015)*.

4. Fourth, the target design water levels for the communities were summarized as noted in the table below, which identifies how each value was calculated.

	Tidal datum based on current tidal epoch MHHW (NAVD88)	Elevation addition to get to 7 days of flooding annually based on 2015 sea level	Sea level rise estimate using IPCC AR5 Median (2015 to 2040)	Resulting target minimum elevation for roads (2040)** (NAVD88)
Sands Community	-1.1"	6.0"	5.4"	10.3"
Twin Lakes Community	-7.0"	6.0"	5.4"	4.4"

Note - The values shown in the final column identify the minimum desired roadway elevation for each of the two pilot communities. Adjustments may be made to this target elevation based on the factors noted in the body of this report.

6.2 APPENDIX 2 – DRAFT ORDINANCE

ORDINANCE NO. -2017

AN ORDINANCE OF THE BOARD OF COUNTY COMMISSIONERS OF MONROE COUNTY, FLORIDA, ESTABLISHING ADOPTED DESIGN CRITERIA AND STANDARDS FOR EXISTING COUNTY ROADS AND DESIGNATIONS FOR ENVIRONMENTALLY CHALLENGING LOCATIONS TO ADDRESS NATURAL FORCES' DEGRADATION AND DAMAGE TO IMPROVED COUNTY ROADS, THE SIGNIFICANT COSTS OF CONSTRUCTION, MAINTENANCE, REMEDIATION, REPAIR, AND OPERATIONS INCURRED WITH RESPECT TO THESE NATURALLY DAMAGED ROADS; RECOGNIZING AND DEFINING MEANINGFUL ACCESS FOR USERS OF SUCH ROADS; PROVIDING FOR CONFLICTS OF LAW; SEVERABILITY; AND AN EFFECTIVE DATE.

WHEREAS, pursuant to Florida Statutes ("F.S.") Ch. 334, the Florida Department of Transportation ("FDOT") has the power to develop and adopt uniform minimum standards and criteria for the design, construction, maintenance, and operation of public roads; and

WHEREAS, Section 336.045, F.S. provides for the uniform minimum standards for design, construction, and maintenance of County roads, as provided by FDOT; and

WHEREAS, FDOT has adopted uniform minimum standards and criteria for the design, construction, maintenance, and operation of public roads and published such standards and criteria in the Manual of Uniform Minimum Standards for Design, Construction and Maintenance for Streets and Highways, which is commonly known as the "Florida Greenbook"; and

WHEREAS, the Florida Greenbook' standards are intended for use on all new construction projects of the state highway and federal aid systems, and it is understood that the standards of the Florida Greenbook cannot be applied completely to all reconstruction and maintenance type projects; however, the Florida Greenbook standards shall be applied to the nearest economically and environmentally reasonable and practical extent; and

WHEREAS, Chapter 14 of the Florida Greenbook allows for "Design Exceptions" in instances where it becomes necessary to deviate from the Florida Greenbook's criteria; and

WHEREAS, Section B of Chapter 14 of the Florida Greenbook states that counties may adopt design criteria for local subdivision roads and/or residential streets by ordinance, and compliance with such regulations is an approved Design Exception; and

WHEREAS, erosion, flooding, and other similar environmental impacts may pose challenges to the effective construction, maintenance, remediation, repair, and operation of improved County roads now and in the future; and

WHEREAS, Monroe County has adopted Policy 1502.1.1 in the Climate and Energy Element of its Comprehensive Plan stating that "Prior to incorporating a new project to the Capital Improvements Element, Monroe County shall assure that it is reviewed for recommendations to increase resiliency and account for the impacts from climate change, including but not limited to, sea level rise and storm surge. Monroe County shall evaluate financial expenditures to fund repairs, reconditioning of deteriorating infrastructure and new infrastructure improvements within or proximate to vulnerable areas to manage public investments appropriately. Monroe County shall focus on level of service standards, as one of the points of analysis, to assure that infrastructure useful life and service expectations can be met in the face of climate change impacts"; and

WHEREAS, due to economic and environmental considerations, including but not limited to forces of nature and local conditions as defined in Section3(d) , Monroe County seeks to create a Design Exception that establishes design criteria and standards for existing improved County roads and future County road improvements that consider(s) the present and future impacts of sea level rise and the projected duration of related flooding; and

WHEREAS, the County also seeks to create a designation for Environmentally Challenging Locations and define meaningful access for users of improved County roads; and

WHEREAS, the County has completed a "Pilot Project" to develop a methodology to create design criteria and standards for road improvement projects in two (2) neighborhoods within Monroe County, and is developing a countywide roads study to determine appropriate design criteria and standards for road improvement projects countywide; and

WHEREAS, once Monroe County has finalized this countywide roads study, the County will revisit these design criteria and standards, as necessary; and

WHEREAS, the Board finds that adoption of the provisions set forth in this ordinance protects the fiscal solvency of Monroe County, limits and reduces fiscal waste, and is in the best interest of the residents of Monroe County.

NOW, THEREFORE, BE IT ORDAINED BY THE BOARD OF COUNTY COMMISSIONERS OF MONROE COUNTY, FLORIDA:

SECTIONS 1: Section _____of the Monroe County Code shall be amended/created to read as follows:

Sec. - <u>DEFINITIONS.</u>

The following words, terms, and phrases shall have the following meanings:

"Environmentally Challenging Location(s)" means

(a) Locations where typical road design criteria and standards are not economically practical, or are not environmentally practical, due to naturally occurring conditions including, but not limited to:

1. Conditions rationally arising from, related to, or in connection with sea level rise or flooding, that impact an improved County road to such an extent that one or more vehicle classes and/or vehicle types may not be able to travel over or along such road without sustaining damage or risking the safety of its passengers; or

2. Conditions rationally arising from, related to, or in connection with sea level rise or flooding, that directly or indirectly interfere with the drainage, maintenance, or repair of an improved County road; or

3. Conditions rationally arising from, related to, or in connection with sea level rise, that cause the drainage, maintenance, or repair of an improved County road to directly or indirectly have an adverse or detrimental impact on a threatened or protected environmental or natural resource (such as, but not limited to threatened or protected animal or plant species, threatened or protected habitat types, buffers thereto, and/or wetlands); or

4. Conditions rationally arising from, related to, or in connection with sea level rise or flooding, due to which the drainage, maintenance, or repair of an improved County road necessary to keep such road at a prior level of service standard, would increase, intensify, or exacerbate, the adverse or detrimental impact of that road on a threatened or protected environmental or natural resource; or

(b) locations where the local conditions as defined in Section 3(d) prevent the Design Exception from being met;

Improved Roads shall mean roads or portions thereof owned by the County, and roads or portions thereof that the County has regularly maintained or repaired for the past seven (7) years.

Meaningful access means the actual ability to use a vehicle on an improved County road, or a portion thereof, to practicably access to privately-owned real property.

SECTION 2: Section _____of the Monroe County Code shall be amended/created to read as follows:

Sec. - <u>APPLICABILITY.</u>

This ordinance shall apply to Improved Roads and/or future projects on Improved Roads.

The County shall apply the design criteria set forth herein and shall, by resolution designate Improved Roads as roads impacted by Environmentally Challenging Conditions, taking into consideration factors including but not limited to the following:

- environmental conditions,

- historical and projected physical damage due to conditions rationally arising from, related to, or in connection with sea level rise and flooding, (including, but not limited to the frequency of such conditions and damage),
- historical and projected maintenance and repair costs, and
- economically beneficial use(s) of privately-owned real property.

SECTION 3: Section _____of the Monroe County Code shall be amended/created to read as follows:

Sec. - <u>DESIGN CRITERIA.</u>

(a) The design criteria listed herein are being adopted for the express purpose of serving as an approved Design Exception to the uniform minimum standards and criteria for the design, construction, maintenance, and operation of Improved Roads or future road improvement projects, pursuant to Section B, Chapter 14 of the Florida Greenbook stating if the County "has adopted by ordinance design criteria for local subdivision roads and/or residential streets, compliance with those regulations is an approved design exception."

(b) For future road improvement projects, the County shall make a determination of the year that it is expected to be in service. That determined year shall be the basis to establish an estimated range of sea level rise projections developed by the Southeast Florida Regional Climate Change Compact ("Compact"). The County may use another professionally accepted method for estimating the range of sea level rise projections or use the range of sea level rise projections developed by another agency. The County shall incorporate the range of sea level rise projections by using the Median or Low level (for the Compact this is one in the same) as a minimum criterion for design of the road improvement project. If the County uses another professionally accepted method for estimating the range of sea level rise projections or uses the range developed by another agency, the lowest estimated level of sea level rise shall be utilized as a minimum criterion for design of the future road improvement project.

(c) To determine the final minimum edge of pavement elevation for future road improvement projects, the County shall:

1. Establish the tidal datum elevation Mean Higher High Water ("MHHW") using the current tidal epoch (1983-2001) with a base year of 1992 at the site of the road improvement project in North American Vertical Datum of 1988 (NAVD 88). This is the project site MHHW.

2. Add to the project site MHHW, the difference between the MHHW at the reference gauge and the elevation that represents the water level with an estimated 7 day annual recurrence interval at the reference gauge, which is the most proximate National Ocean and Atmospheric Administration ("NOAA") tide gauge. The difference is calculated using the 20 year tidal record from the

reference gauge and detrending the data to the base year of 1992 by subtracting NOAA's published Sea Level Trend for this reference gauge.

3. Add estimated sea level rise projection as established in 3(b) to the 7 day recurrence flood interval. Adjust this flood elevation to the current design year by adding the appropriate calculated amount to account for sea level rise. The data are adjusted to the current year by adding the projection as established in 3(b) from 1992 up to and including the project year.

(d) For future road improvement projects, the County shall also analyze local conditions that may influence a particular road design or prevent the design criteria in Sections 3(b) and (c) from being met. Each condition shall be evaluated on its own merit, although each factor need not be given equal weight. The following conditions shall be considered and balanced using the County's best professional judgment:

1. Physical site constraints;
2. Current road conditions and elevations;
3. Current elevation of adjacent properties;
4. Sensitivity of the land or mitigation requirements to be met;
5. Water quality requirements;
6. Right of way needs;
7. Availability of land to accommodate drainage;
8. Elevation of water table in relation to road elevation;
9. Impacts to access for private property (driveways);
10. Future maintenance needs and costs including staffing requirements; and
11. Number of developed properties that the subject road services as the sole means of access.

(e) If the design criteria in Sections 3(b) and (c) cannot be met for a future road improvement project, or if the criteria in Sections 3(b) and (c) can be met, but the conclusion of the local conditions analysis in Section 3(d) indicates that it would not be economically or environmentally practical to meet it, the County may designate the Improved Road to be an Environmentally Challenging Location.

(f) Due to forces of nature and local conditions rationally arising from, related to, or in connection with sea level rise and flooding, access to property by County roads that are located in Environmentally Challenging Locations may be limited. In such instance, the Board of County Commissioners may determine that such forces of

nature or local conditions have made it not economically or environmentally practical, to maintain such County roads by the County's general road standards or meet those in this Design Exception, and may, by resolution, designate such a County road as being located in an Environmentally Challenging Location.

(g) For existing Improved Roads that are or may be designated as being located in Environmentally Challenging Locations, the minimum standards of maintenance shall differ from the County's general minimum standards of maintenance due to the local conditions of Environmentally Challenging Locations.

(h) Improved Roads in Environmentally Challenging Locations may experience local conditions that rationally necessitate that the County's design criteria for general road standards or those in this Design Exception are altered or will be altered to the extent that the following conditions may be present in providing meaningful access:

1. Periods of time when the Improved Road may be partially or fully submerged with saltwater, brackish water, or rainwater.

2. Periods of time when the Improved Road may be buried, covered, or blocked by floating vegetation (e.g., seaweed, mangrove debris, and the like), or sand or soil, after road inundation conditions subside.

3. Temporally variable sub-standard lane widths, single lanes, and varying maintained width(s) in different locations along the Improved Road.

4. Limited access by vehicle class, type, size, or weight.

5. No assurance that emergency vehicles (e.g., fire, ambulance, police) or public service vehicles (e.g., garbage collection, mail service, parcel delivery, school bus service) can use or routinely use such Improved Road to access privately-owned real property.

6. Paved surfaces with intermittent disruptions (e.g., 'potholes,' cracks, or other loose material) due to frequent inundation.

7. Other similar conditions that directly or indirectly cause the Improved Road to be in a substandard state.

(i) Private property that is accessed by Improved Roads that are located in, or will be located in, Environmentally Challenging Locations may encounter access issues as set forth above. Factors that may affect access to private property include, but are not limited to:

1. The original natural physical characteristics and features of the area where the parcel is located;

2. The original method of access to the parcel from the location of the nearest Improved Road;

3. Changes to the physical or configurative characteristics of the area in which the parcel is located, whether natural or man-made; and

4. The inability of the County to repair a Improved Road due to federal, state, or other local government laws or regulations, or due to a decision by a court of competent jurisdiction or by an administrative hearing officer.

(j) Access to private property served by Improved Roads in Environmentally Challenging Locations may be limited by local conditions beyond the practical or reasonable control of the County. Resulting circumstances may include, but are not limited to:

1. Roadway conditions that necessitate the use of a four-wheel drive (or other specially designed) vehicle, or a vehicle that rides higher off of the ground, for passage.

2. Periods of time before roadway drainage and/or repair may be accomplished when vehicular access is limited.

3. Extended periods during which time access from the Improved Road or the County road itself is impassable to one or more vehicle classes, types, sizes, or weights.

4. Instances where roadway repair cannot legally commence, or be accomplished, without permits issued by federal or state agencies due to adverse or detrimental environmental or natural resource impacts.

(k) Except as otherwise determined by the Board of County Commissioners, the County shall have no affirmative duty to construct, or permit others to construct, new roads, to upgrade roads, or to otherwise make particular improvements to Improved Roads in Environmentally Challenging Locations.

(l) The County has no duty or obligation to make particular improvement to or upgrade of any portion of an Improved Road in an Environmentally Challenging Location situated adjacent to private property that has been acquired at a time when any of the conditions or circumstances listed in Section 3(j) of this ordinance are already in existence, or after the County has designated the County road as provided by Section 2 of this Ordinance.

(m) Nothing contained herein shall prohibit private property owners served by existing Improved Roads in Environmentally Challenging Locations from petitioning the Board of County Commissioners for a vacation of the road, or the establishment of a Municipal Services Benefit Unit (“MSBU”) and/or a Municipal Services Taxing Unit (“MSTU”).

(n) The Board of County Commissioners may in their own discretion abandon an Improved Road in Environmentally Challenging Locations as authorized pursuant to F.S. 336.09

SECTION 4: - CONFLICTS OF LAW.

Any provision of another County ordinance or regulation relating to road maintenance or development of private property on Improved Roads affected by forces of nature that is in conflict with this Ordinance is repealed to the extent of such conflict.

Except as provided in the paragraph above, whenever the requirements or provisions of this Ordinance are in conflict with the requirements or provisions of any other lawfully adopted ordinance or statute, the more restrictive requirements shall apply.

SECTION 5: - SEVERABILITY.

It is the Board's intent that if any section, subsection, clause, or provision of this Ordinance is deemed invalid or unconstitutional by a court of competent jurisdiction, such portion shall become a separate provision and shall not affect the remaining provisions of this ordinance. The Board of County Commissioners further declares its intent that this Ordinance would have been adopted if such invalid or unconstitutional provision is not included.

SECTION 6: - INCLUSION IN CODE OF ORDINANCES.

The provisions of this ordinance shall be included and incorporated in the Code of Ordinances of the County of Monroe, Florida, as an addition or amendment thereto, and shall be appropriately renumbered to conform to the uniform numbering system of the Code.

SECTION 7: TRANSMITTAL AND EFFECTIVE DATE.

This Ordinance will take effect upon its filing with the Office of the Secretary of the Florida Department of State as per F.S. 125.66(2).

PASSED AND ADOPTED by the Board of County Commissioners of Monroe County, Florida, at a regular meeting of said Board held on the _____day of _____, 2017.

Mayor George Neugent ____

Mayor Pro Tem David Rice ____

Commissioner Danny L. Kolhage ____

Commissioner Heather Carruthers ____

Commissioner Sylvia Murphy ____

(SEAL)

ATTEST: KEVIN MADOK, Clerk

BOARD OF COUNTY COMMISSIONERS OF MONROECOUNTY, FLORIDA

By: _____
Deputy Clerk

By: _____
Mayor/Chair

ERIN L. DEADY, P.A.

and

WSP | PARSONS BRINCKERHOFF

Section 4: Monroe County Budget

SEA LEVEL RISE PILOT PROJECT - BIG PINE KEY (VOLUME B)

90% Engineer's Opinion of Probable Construction Cost

PAY ITEM NO.	ITEM DESCRIPTION	UNIT	QUANTITY	Unit price	Total price
101-1	MOBILIZATION	LS	1.00	$ 610,502.27	$ 610,502.27
102-1	MAINTENANCE OF TRAFFIC	DA	120.00	$ 600.00	$ 72,000.00
ROADWAY					
104-10-3	SEDIMENT BARRIER (STRAW WATTLE 9")	LF	277.92	$ 6.00	$ 1,667.52
104-18	INLET PROTECTION	EA	29.00	$ 160.00	$ 4,640.00
110-1-1	CLEARING & GRUBBING	AC	1.18	$ 13,000.00	$ 15,380.04
120-1	REGULAR EXCAVATION	CY	27.30	$ 35.00	$ 955.50
120-6	EMBANKEMENT	CY	5.00	$ 55.00	$ 275.00
160-4	STABILIZATION TYPE B	SY	378.72	$ 31.00	$ 11,740.32
285-704	OPTIONAL BASE GROUP 04 - ASPHALT BASE (TYPE B-12.5)	SY	378.72	$ 66.00	$ 24,995.52
286-1	TURNOUT CONSTRUCTION (GRAVEL)	SY	439.20	$ 25.00	$ 10,980.00
286-1	TURNOUT CONSTRUCTION (ASPHALT)	SY	43.78	$ 23.13	$ 1,012.54
327-70-1	MILLING EXIST ASPH PAVT, 1" AVG DEPTH	SY	4581.77	$ 8.00	$ 36,654.16
334-1-11	SUPERPAVE ASPHALTIC CONC, TRAFFIC A	TN	586.64	$ 380.00	$ 222,925.03
530-74	BEDDING STONE (NO. 57 STONE)	TN	266.37	$ 165.00	$ 43,951.28
570-1-2	PERFORMANCE TURF, SOD	SY	1493.11	$ 12.00	$ 17,917.34
700-1-60	SINGLE POST SIGN, RELOCATE	AS	14.00	$ 100.00	$ 1,400.00
706-3	RETRO-REFLECTIVE PAVEMENT MARKERS	EA	72.00	$ 4.34	$ 312.48
711-11-125	THERMOPLASTIC, STANDARD, WHITE, SOLID 24"	LF	194.06	$ 16.60	$ 3,221.46
711-16-201	THERMOPLASTIC, STANDARD-OTHER SURFACES, YELLOW, SOLID, 6"	GM	0.06	$ 6,000.00	$ 360.00
711-16-231	THERMOPLASTIC, STANDARD-OTHER SURFACES, YELLOW, SKIP, 6"	GM	0.25	$ 1,385.93	$ 349.25
				Roadway Subtotal	**$ 398,737.45**
UTILITY ADJUSTMENT					
10-50-16-003	UTILITY PIPE,REMOVE & DISPOSE, 5-7.9"	LF	420.00	$ 55.00	$ 23,100.00
1050-51-206	6" WM DI PIPE FURNISH & INSTALL	LF	420.00	$ 150.00	$ 63,000.00
425-5	ADJUST MANHOLE (UTILITIES) (TOP ADJUSTMENT)	SY	2.00	$ 1,100.00	$ 2,200.00
				Utility Adjustment Subtotal	**$ 88,300.00**
PUMP STATION AND DRAINAGE					
120-1	REGULAR EXCAVATION	CY	6670.68	$ 7.29	$ 48,629.24
448-73	PUMP STATION DRAINAGE	LS	1.00	$ 2,174,020.00	$ 2,174,020.00
	FURNISH AND INSTALL PUMPS: FLYGT MODEL LL3602/845	EA	4.00	$ 262,500.00	$ 1,050,000.00
	FURNISH AND INSTALL CONTECH TREATMENT UNIT: MODEL CDS5678	EA	1.00	$ 104,520.00	$ 104,520.00
	ELECTRICAL (INCL VFD, ELECT SERVICE, ETC.)	LS	1.00	$ 1,019,500.00	$ 1,019,500.00
125-3	SELECT BEDDING MATERIAL	CY	395.00	$ 97.35	$ 38,453.25
1050-51-224	UTILITY PIPE-DUCTILE IRON/CAST IRON, FURNISH & INSTALL, WATER/SEWER, 24"	LF	578.00	$ 170.00	$ 98,260.00
1050-51-230	UTILITY PIPE-DUCTILE IRON/CAST IRON, FURNISH & INSTALL, WATER/SEWER, 36"	LF	456.00	$ 575.18	$ 262,282.08
	UTILITY PIPE-DUCTILE IRON/CAST IRON, FURNISH & INSTALL, WATER/SEWER, 48"	LF	477.00	$ 315.00	$ 150,255.00
1080-29-124	UTILITY FIXTURE, MECHANICAL JOINT RESTRAINT, FURNISH & INSTALL, 24"	EA	30.00	$ 2,160.89	$ 64,826.70
1080-11-509	UTILITY FIXTURES, F&I, 20-49.9", MECHANICAL JOINT RESTRAINT	EA	18.00	$ 3,399.00	$ 61,182.00
1055 51-124	UTILITY FITTINGS, DUCTILE IRON/CAST IRON, FURNISH AND INSTALL ELBOW, 24"	EA	14.00	$ 938.00	$ 13,132.00
	UTILITY FITTINGS, DUCTILE IRON/CAST IRON, FURNISH AND INSTALL ELBOW, 36"	EA	4.00	$ 2,470.00	$ 9,880.00
	UTILITY FITTINGS, DUCTILE IRON/CAST IRON, FURNISH AND INSTALL ELBOW, 48"	EA	5.00	$ 6,143.40	$ 30,717.00
1055-11-425	UTILITY FITTING,F&I,DI/CI,TEE,20-49.9"	EA	12.00	$ 5,344.42	$ 64,133.04
1055-51-524	UTILITY FITTINGS, DUCTILE IRON/CAST IRON, FURNISH & INSTALL, CAP/PLUG, 24"	EA	1.00	$ 2,850.00	$ 2,850.00
1055-11-435	UTILITY FITTINGS, F&I, DI/CI, REDUCER, 20 - 49.9"	EA	3.00	$ 4,142.00	$ 12,426.00
1080-24-124	UTILITY FIXTURE, VALVE ASSEMBLY, FURNISH AND INSTALL, 24" FOR GATE AND SWING VALVES	EA	20.00	$ 17,437.50	$ 348,750.00
1080-24-102	UTILITY FIXTURE, VALVE ASSEMBLY, FURNISH AND INSTALL, 2"	EA	2.00	$ 725.56	$ 1,451.12
1050-16-002	UTILITY PIPE,REMOVE & DISPOSE, 2-4.9"	LF	300.00	$ 80.00	$ 24,000.00
425-15-41	INLETS, DT BOT, TYPE D <10'	EA	29.00	$ 3,523.81	$ 102,190.49
425-2-71	MANHOLES, J-7 <10'	EA	11.00	$ 9,000.00	$ 99,000.00
425-2-72	MANHOLES, J-7 >10'	EA	1.00	$ 12,300.00	$ 12,300.00
425-2127	DRAINAGE MANHOLE, UTILITY CONFLICT STRUCTURE	EA	1.00	$ 24,600.00	$ 24,600.00
430-173-115	PIPE CULVERT, OPTIONAL MATERIAL ROUND, 15" SD	LF	30.00	$ 377.63	$ 11,328.90
430-173-118	PIPE CULVERT, OPTIONAL MATERIAL ROUND, 18" SD	LF	341.00	$ 112.18	$ 38,253.38
430-173-124	PIPE CULVERT, OPTIONAL MATERIAL ROUND, 24" SD	LF	1426.00	$ 105.24	$ 150,072.24
430-173-136	PIPE CULVERT, OPTIONAL MATERIAL ROUND, 36" SD	LF	151.00	$ 3,656.00	$ 552,056.00
	FURNISH AND INSTALL INJECTION WELLS AND ANCILLARY EQUIPMENT (EXCEPT GATE VALVES)	LS	12.00	$ 60,000.00	$ 720,000.00
400-4-25	SUPPORT OF EXCAVATION-COFFERDAM	LS	1.00	$ 300,000.00	$ 300,000.00
400-4-25	CONCRETE-PUMP STATION	CY	269.40	$ 777.43	$ 209,436.35
415-1-6	MISCELLANEOUS STEEL-PUMP STATION	LB	80990.52	$ 1.01	$ 81,800.43
				Pump Station and Drainage Subtotal	**$ 5,706,285.22**
	Construction Engineering & Inspections (10%)				**$ 619,332.27**
	Contingency (10%)				**$ 619,332.27**
				TOTAL OPCC	**$ 8,114,489.48**

5. Monroe County Service Area Map

Sands Subdivision Road Elevation and Drainage Improvement Project Service Area Map

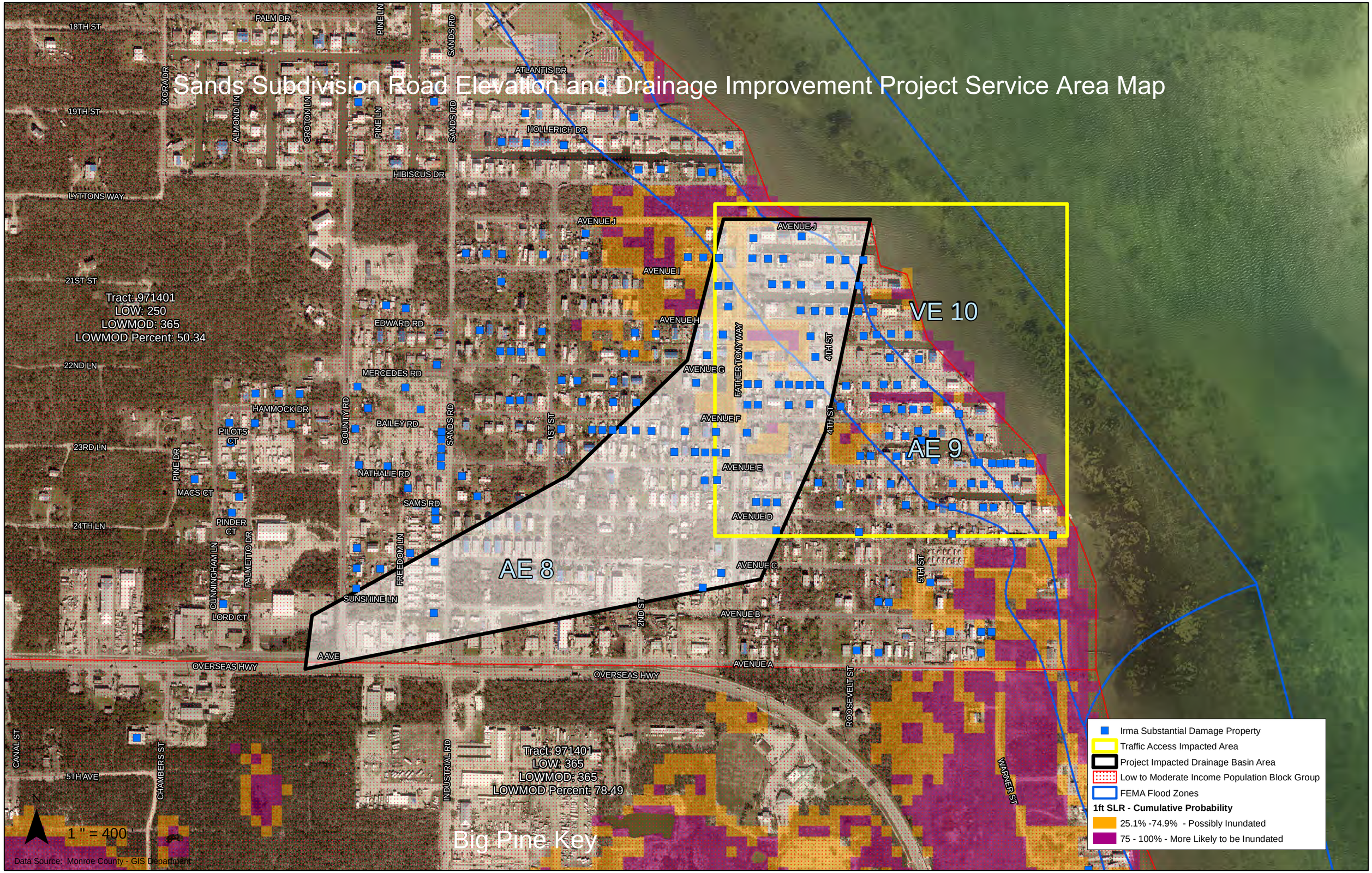

Date: 8/15/2019

Date: 8/15/2019

Big Pine Key

FATHER TONY DRAINAGE BASIN AREA

- 132 HOUEHOLDS IMPACTED,
- 58 SUBSTANTIAL DAMAGE PROPERTIES
- 104 LMI HOUSEHOLDS

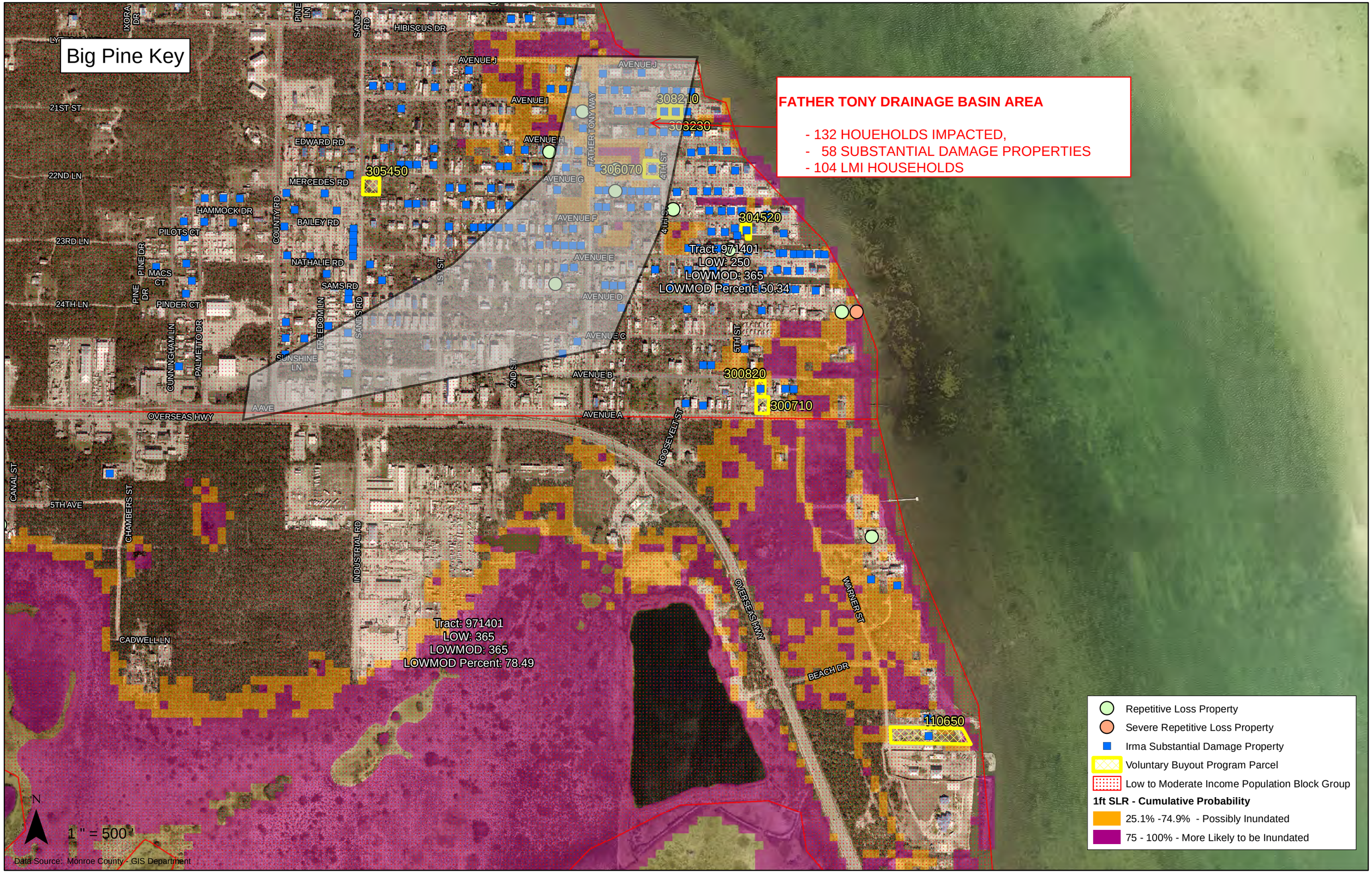

Date: 7/30/2019

Date: 7/30/2019

Big Pine Key

Father Tony Way Road Elevation and Improvement Traffic Access Impacted Area:

- 104 Households
- 101 Homes with Substantial Damage
- 83 LMI Households

308210
308230
306070
305450
304520
300820
300710
110650

Tract: 971401
LOW: 250
LOWMOD: 365
LOWMOD Percent: 50.34

Tract: 971401
LOW: 365
LOWMOD: 365
LOWMOD Percent: 78.49

Repetitive Loss Property
Severe Repetitive Loss Property
Irma Substantial Damage Property
Voluntary Buyout Program Parcel
Low to Moderate Income Population Block Group

1ft SLR - Cumulative Probability

25.1% -74.9% - Possibly Inundated
75 - 100% - More Likely to be Inundated

N

1 " = 500'

Data Source: Monroe County - GIS Department

Date: 7/30/2019

Date: 7/30/2019

Big Pine Key/Sands – USGS Topo

U.S. Fish and Wildlife Service
National Wetlands Inventory

Big Pine Key Sands USGS

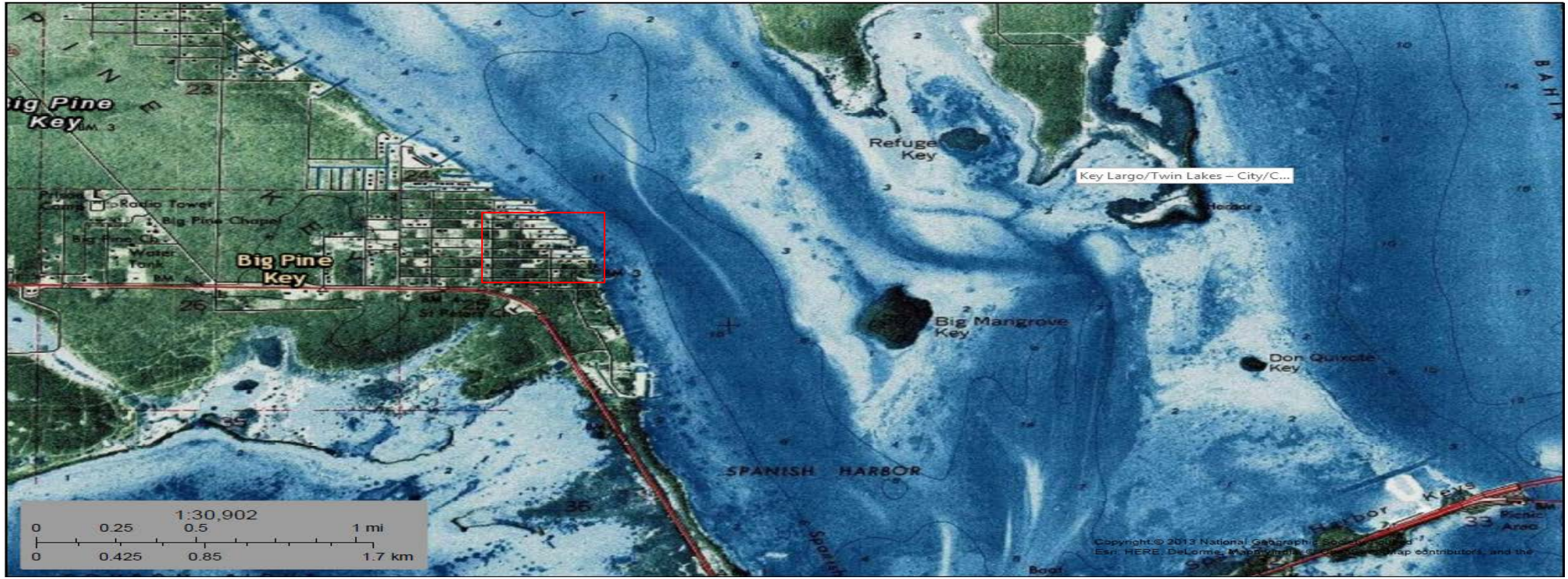

Big Pine Key/Sands – City/County

U.S. Fish and Wildlife Service
National Wetlands Inventory

Big Pine City County

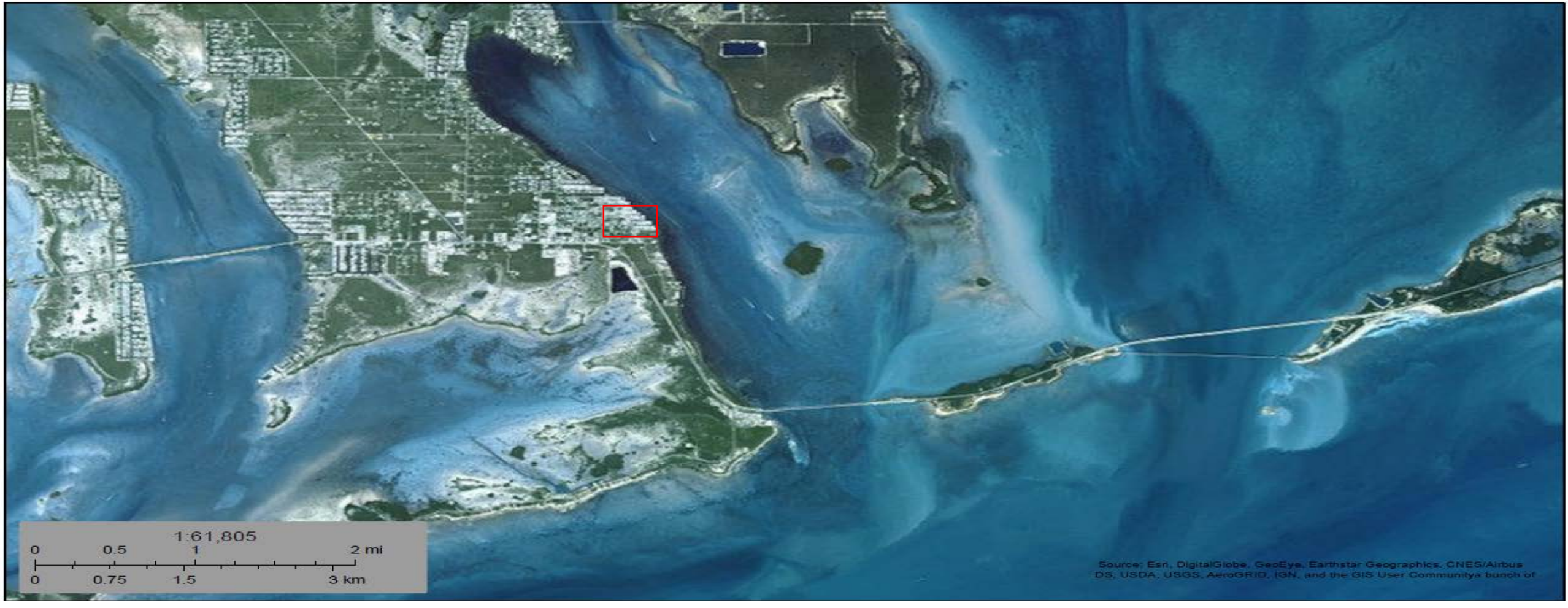

Big Pine Key/Sands – FIRMette 1 of 2

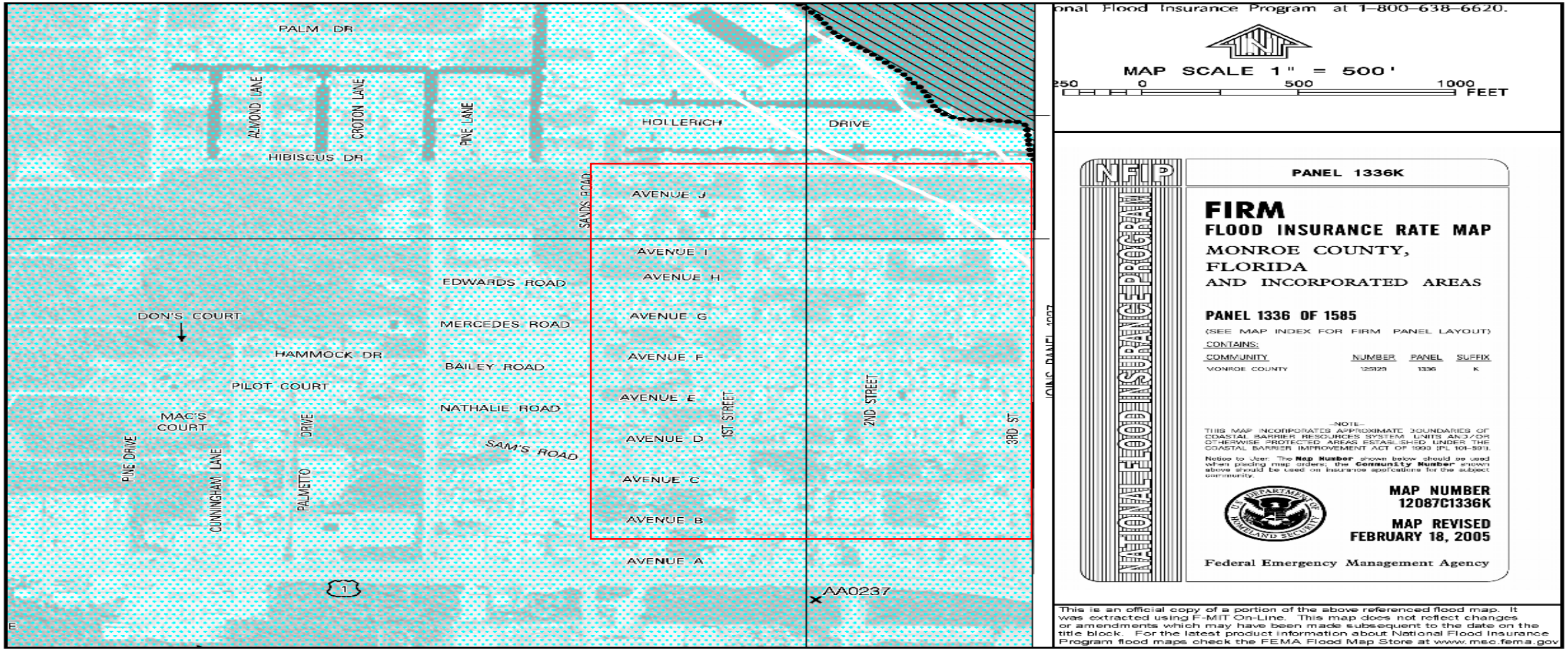

Big Pine Key/Sands – FIRMette 2 of 2

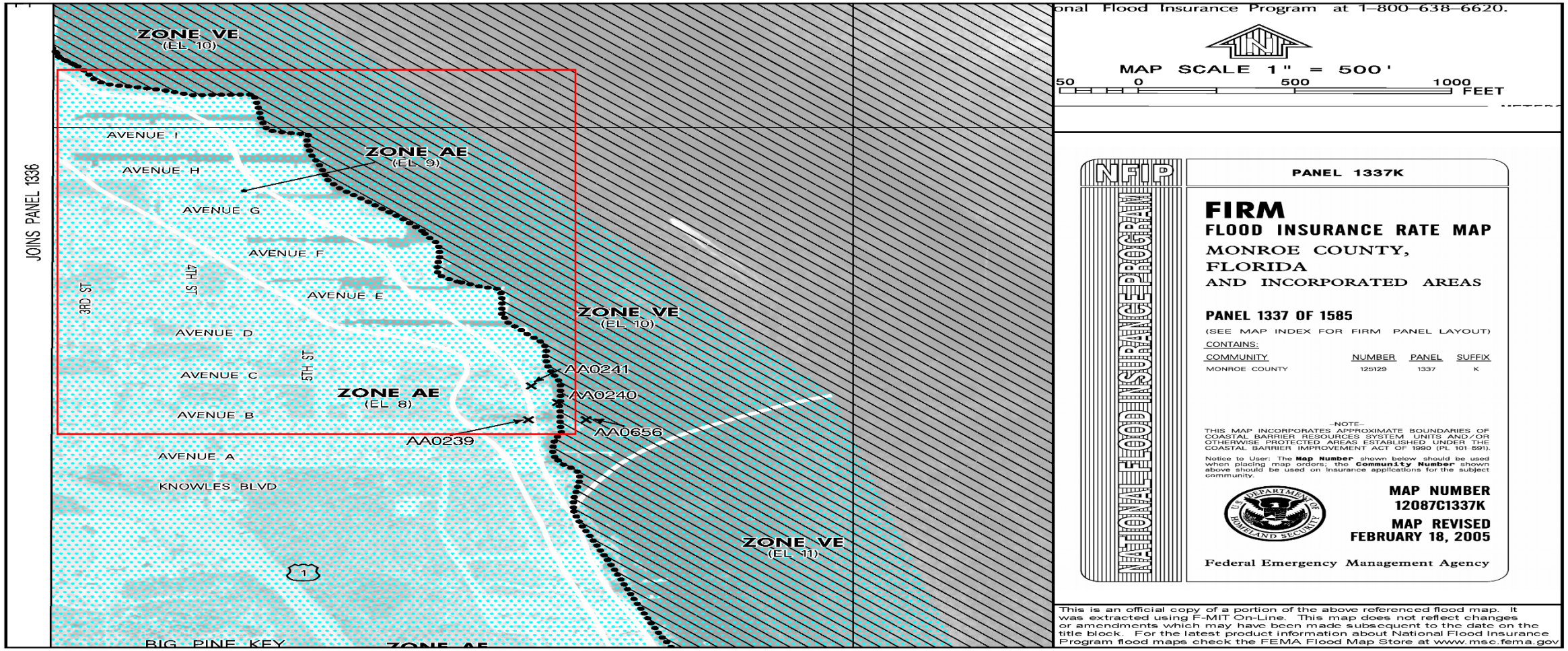

Big Pine Key/Sands – Project Site Photos

Section 6: Monroe County Work Plan

CDBG Work Plan – Big Pine Key Roadway and Drainage Project

Milestone	Previous	July 2020	August 2020	September 2020	October 2020	November 2020	December 2020	January 2021	February 2021	March 2021
BOCC project approval	January 2017 BPK road improvement approved									
Design WSP USA, Inc.	In process To be complete end June 2020									
Advertise for Construction Bids		Depends on DEO funding								
MC Intent to Award				15 days after receipt of bids for next scheduled BOCC meeting						
BOCC Award					Award Construction contract within 30 days after intent to award					
Notice to Proceed (NTP) Issued						Construction to begin within 60				

to Contractor						days of award Project to take 300 days				
Project Audit 25% completion							Audit at 75 days - construction 25% complete			
Project Audit 50% completion								Audit at 150 days – construction 50% complete		
Project Audit 75% completion									Audit at 225 days – construction 75% complete	
Project 100 complete										Construction complete 300 days after NTP

Section 7: Organization Chart and Team Roles

Monroe County Project Organization Chart

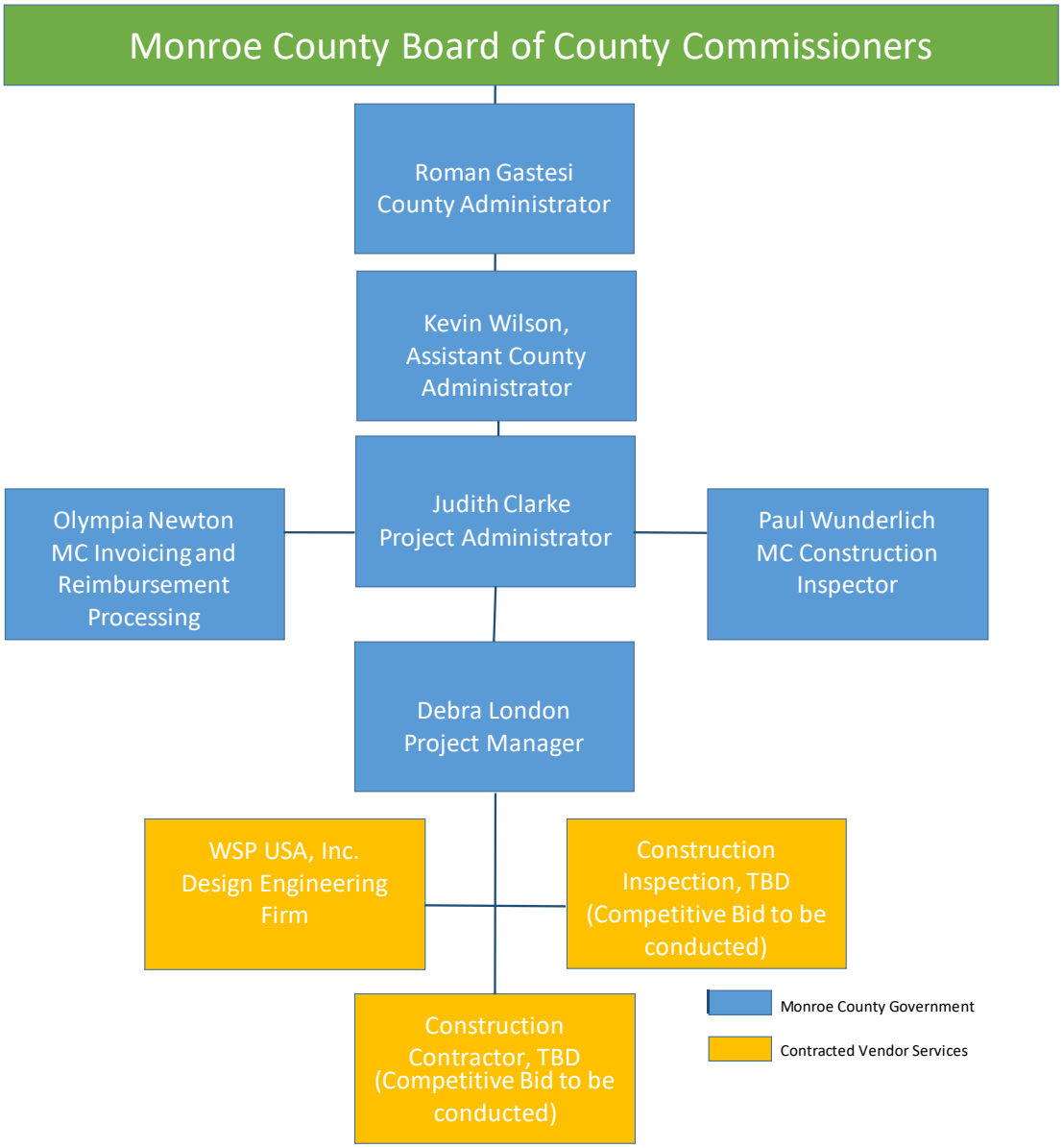

It is anticipated that the MC CDBG team members (Grant Administrator, Project Manager, Finance and Invoicing) will collectively spend about 40 hours per month managing the project. The CDBG construction team members (Contractor, Construction Engineering and Inspection Services Consultant and MC Construction Inspector team) is anticipated to spend about 160 hours per month directly managing the construction of the project.

Staff, Contractor, and Vendor Roles, Responsibilities and Level of Effort

Name	Position	Roles and Responsibilities	Level of Effort (hours/month)
Judith Clark Director of Engineering Services	Project Administrator	Review and approve all policy, legal, and budgetary issues related to the Project	40 hrs
Olympia Newton	Invoicing and Reimbursement Processing	Process all project invoices, and grant reimbursement requests	40 hrs
Paul Wunderlich	Construction Inspector	Inspect construction of project to verify that local, state, and federal permitting requirements are met, manage on-site construction process	80 hrs
Debra London, FCCM	Project Manager	Develop and implement project work plan; manage all design and construction tasks working with vendors; monitor and implement federal, state, and local administrative and legal rules, regulations, and requirements including CDBG-DR requirements; manage grants and contracts	160 hrs
WSP, USA, Inc.	Design Engineering Firm	Implement all design-engineering tasks for project	200 hrs during design phase only
TBD (competitive bid to be conducted)	Construction Contractor	Implement all construction tasks for project	160 hrs per team members during construction phase only
TBD (competitive bid to be conducted	Construction Inspection	Monitor the construction process in compliance with local, state, and federal regulations	Estimated 160 hrs per month